Dist	COUNTY	ROUTE	POST MILES TOTAL PROJECT	SHEET No.	TOTAL SHEETS
03	But	32	10.3/11.3	1	144

STATE OF CALIFORNIA

DEPARTMENT OF TRANSPORTATION

PROJECT PLANS FOR CONSTRUCTION ON

STATE HIGHWAY

IN BUTTE COUNTY
IN CHICO
ON STATE ROUTE 32
FROM 0.3 MILE EAST OF STATE ROUTE 99
TO EL MONTE AVENUE

TO BE SUPPLEMENTED BY STANDARD PLANS DATED MAY 2006
AND CITY OF CHICO STANDARD PLANS (LATEST EDITION)

CITY PROJECT NAME: STATE ROUTE 32 WIDENING PROJECT (PHASE I)
PROJECT No. 15010
FROM EAST OF PARK AND RIDE LOT TO EL MONTE AVENUE
BUDGET No. MAJGC/15010-300-4150

INDEX OF PLANS

SHEET No.	DESCRIPTION
1	TITLE AND LOCATION MAP
2–9	TYPICAL SECTIONS
10	KEY MAP/PROJECT CONTROL
11–14	LAYOUTS
15–18	LAYOUTS (DEMOLITION PLAN)
19–22	PROFILE AND SUPERELEVATION DIAGRAM
23–31	CONSTRUCTION DETAILS
32–39	DRAINAGE PLANS, PROFILES, DETAILS AND QUANTITIES
40–44	TREE REMOVAL PLAN
45–48	UTILITY PLANS AND DETAILS
49	CONSTRUCTION AREA SIGNS
50–51	STAGE CONSTRUCTION PLANS
52–64	TRAFFIC HANDLING PLANS, DETAILS, AND QUANTITIES
65–69	PAVEMENT DELINEATION PLANS, DETAILS AND QUANTITIES
70–76	SIGN PLANS, DETAILS AND QUANTITIES
77–85	SOUND WALL PLANS
86–88	SUMMARY OF QUANTITIES
89–105	ELECTRICAL PLANS
106–127	LANDSCAPE PLANS
128–144	DEAD HORSE SLOUGH BRIDGE (WIDEN) Br. No. 12–0135

LOCATION MAP

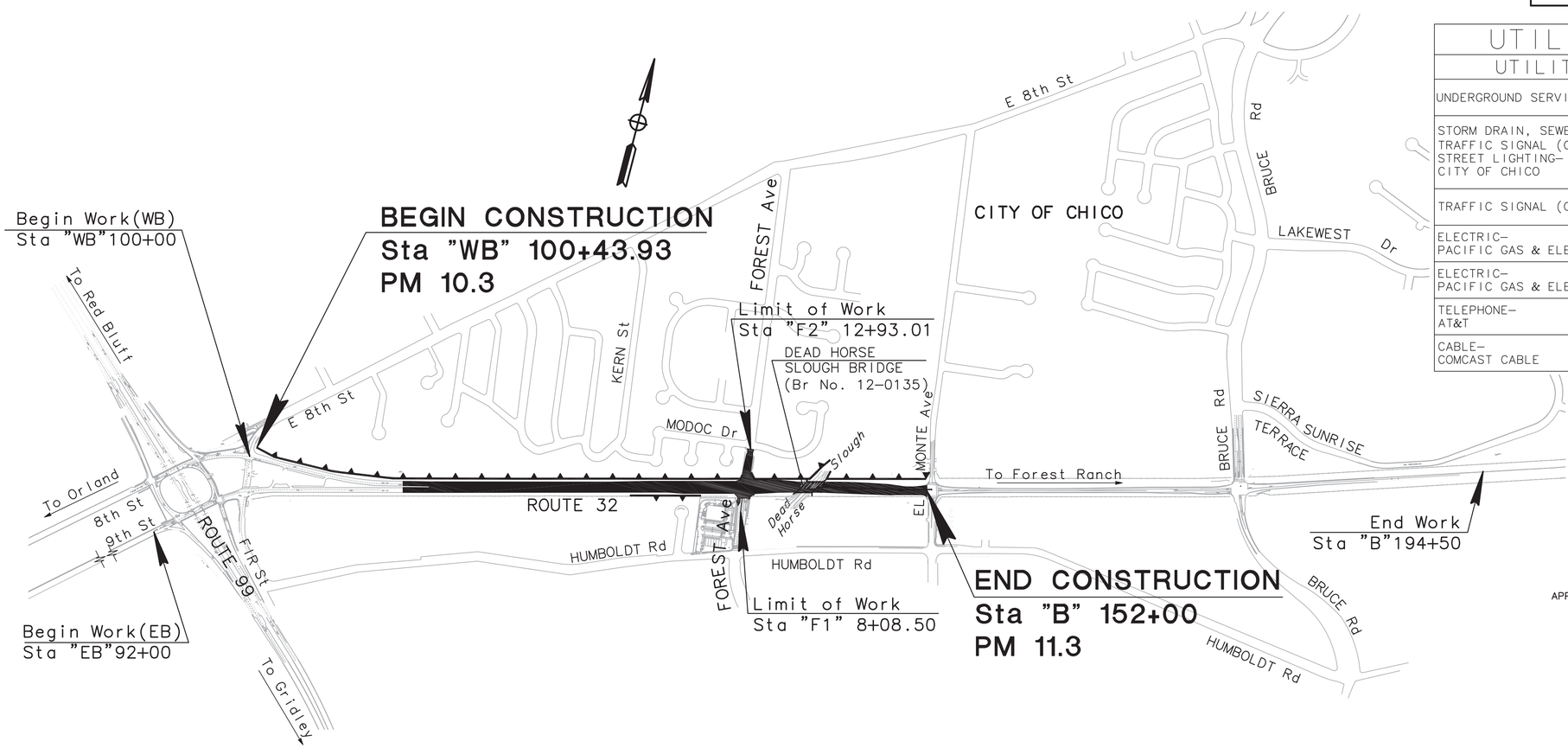

UTILITY REPRESENTATIVES		
UTILITY	REPRESENTATIVE	PHONE
UNDERGROUND SERVICE ALERT	U.S.A.	(800)227–2600
STORM DRAIN, SEWER, TRAFFIC SIGNAL (CITY), STREET LIGHTING– CITY OF CHICO	CITY OF CHICO	(530)894–4200
TRAFFIC SIGNAL (CALTRANS)	JIM ROGERS	(530)521–4540
ELECTRIC– PACIFIC GAS & ELECTRIC	DAVID BARRIOS– REPRESENTATIVE	(530)894–4727
ELECTRIC– PACIFIC GAS & ELECTRIC	MITCH CORNING– PROJECT MANAGER	(530)894–4455
TELEPHONE– AT&T	CAROL PRINCE– PUBLIC WORKS MANAGER	(916)409–1384
CABLE– COMCAST CABLE	BRANDON STOKES	(530)332–5993

THE CONTRACTOR SHALL POSSESS THE CLASS (OR CLASSES) OF LICENSE AS SPECIFIED IN THE "NOTICE TO BIDDERS."

NO SCALE

R.M. Br 12/22/11
PROJECT ENGINEER DATE
REGISTERED CIVIL ENGINEER

REGISTERED PROFESSIONAL ENGINEER
ROBERT MATTHEW BROGAN
No. 63854
Exp. 09/30/12
CIVIL
STATE OF CALIFORNIA

APPROVED BY: Tom Z. Varga
TOM Z. VARGA, RCE 43111 EXP 3/31/12
CAPITAL PROJECT SERVICES DIRECTOR
CITY OF CHICO, CALIFORNIA
DATE: 12/22/11

MARK THOMAS & COMPANY, INC.
7300 FOLSOM BLVD. SUITE 203
SACRAMENTO, CA 95826

CITY OF CHICO
CAPITAL PROJECT SERVICES
411 MAIN STREET
CHICO, CA 95928

CONTRACT No.	03-1E4904
PROJECT ID	03000002644

APPROVED AS TO IMPACT ON STATE FACILITIES AND CONFORMANCE WITH APPLICABLE STATE STANDARDS AND PRACTICES AND THAT TECHNICAL OVERSIGHT WAS PERFORMED.

CONSULTANT DESIGN ENGINEER	CALTRANS DESIGN OVERSIGHT APPROVAL	REGISTRATION No.	LICENSE Exp DATE	DATE SIGNED
ROBERT MATTHEW BROGAN	REBECCA MOWRY	C54415	12/31/11	

LAST REVISION 00-00-00 DATE PLOTTED => $DATE TIME PLOTTED => $TIME

PATH: V:\Chico-55-0131-SR32 Widening\CADD\Drawing\ FILE NAME: sr32_T1 PLOT DATE: Dec 19, 2011-10:45:51am CAD USER: eweeks

Dist	COUNTY	ROUTE	POST MILES TOTAL PROJECT	SHEET No.	TOTAL SHEETS
03	But	32	10.3/11.3	2	144

R.M. Brogan 12-22-11
REGISTERED CIVIL ENGINEER DATE

DECEMBER 22, 2011
PLANS APPROVAL DATE

REGISTERED PROFESSIONAL ENGINEER ROBERT MATTHEW BROGAN No. 63854 Exp. 9/30/12 CIVIL STATE OF CALIFORNIA

THE STATE OF CALIFORNIA OR ITS OFFICERS OR AGENTS SHALL NOT BE RESPONSIBLE FOR THE ACCURACY OR COMPLETENESS OF SCANNED COPIES OF THIS PLAN SHEET.

MARK THOMAS & CO., INC.
7300 FOLSOM BLVD STE 203
SACRAMENTO, CA 95826

CITY OF CHICO
CAPITAL PROJECT SERVICES
411 MAIN STREET
CHICO, CA 95927

NOTES:

1. DIMENSIONS OF THE PAVEMENT STRUCTURES (STRUCTURAL SECTIONS) ARE SUBJECT TO TOLERANCES SPECIFIED IN THE STANDARD SPECIFICATIONS.
2. FOR EXACT CURB/DIKE TYPE AND LIMITS, SEE LAYOUT AND CONSTRUCTION DETAIL SHEETS.
3. SUPERELEVATION AS SHOWN OR AS DIRECTED BY THE ENGINEER.
4. PLACE HMA DIKE ON MINIMUM OF 0.15' THICK HOT MIX ASPHALT (TYPE A).
5. PROFILE GRADE IS AT TOP OF DENSE GRADED HOT MIX ASPHALT.
6. SLOPE ROUNDING AS SHOWN OR AS DIRECTED BY THE ENGINEER. OMIT SLOPE ROUNDING ON SLOPES FLATTER THAN 4:1.
7. SEE LAYOUT SHEETS AND CONSTRUCTION DETAILS FOR EXACT LIMITS OF COLD FOAM IN-PLACE RECYCLING, HMA-A OVERLAY, AND HMA-O OVERLAY.
8. FOR STATIONS "B" 142+38.10 TO 143+50 AND "B1" 143+50 TO 143+61.64 SEE STRUCTURES PLANS.
9. SEE SHEETS L-5 THROUGH L-8 FOR EXACT LIMITS OF REMOVE CONCRETE AND OBLITERATE SURFACING.
10. SEE SOUND WALL SHEETS FOR LIMITS OF EXISTING CHAIN LINK FENCE REMOVAL.
11. WHERE OBLITERATE SURFACING IS SHOWN ADJACENT TO EXISTING PAVEMENT WHICH SHALL BE USED FOR THE PASSAGE OF PUBLIC TRAFFIC, THE CONTRACTOR SHALL SAWCUT AT THE NEW EDGE OF SHOULDER.

STRUCTURAL SECTIONS:

1 — 0.10' HMA-O
0.55' HMA-A
1.60' CLASS 2 AB

2 — 0.35' MINOR CONCRETE (SIDEWALK)
0.50' CLASS 2 AB

3 — 0.50' CLASS 2 AB

4 — 0.25' MINOR CONCRETE (TEXTURED PAVING)
0.25' CLASS 2 AB

5 — 0.10' HMA-O
1.25' HMA-A

6 — 0.35' HMA-A
1.00' CLASS 2 AB

7 — 1.00' CFIPR

8 — 0.55' HMA-A
1.60' CLASS 2 AB

EXISTING STRUCTURAL SECTION:

A — 0.25' AC
0.50' AB
0.67' AS

B — 0.15' RHMA
0.65' HMA
1.80' AB

C — 0.25' AC
1.00' AB

D — 0.25' AC
0.67' AB
0.92' AS

LEGEND - TYPICALS ONLY

CFIPR
OBLITERATE SURFACING
FUTURE LANDSCAPING

DESIGN DESIGNATION:

STATE ROUTE 32
2020 ADT = 27,200
2030 ADT = 33,400
TI (10 YEARS) = 9.5
TI (20 YEARS) = 10.5
R-VALUE = 19

D = 55%
T = 5%
V = 50 MPH
ESAL = 3,652,400
DHV = 3,170

NON-STANDARD ABBREVIATIONS:

AP	ANGLE POINT
AFTS	ALTERNATIVE FLARED TERMINAL SYSTEM
BLDS	BICYCLE LOOP DETECTOR SYMBOL
BOW	BACK OF WALK
BOC	BACK OF CURB
C&G	CURB AND GUTTER
CFIPR	COLD FOAM IN-PLACE RECYCLING
CG&SW	CURB, GUTTER & SIDEWALK
C.O.C.	CITY OF CHICO
CR	CURB RAMP
FOW	FACE OF WALK
GB	GRADE BREAK
LG	LIP OF GUTTER
HMA-A	HOT MIX ASPHALT (TYPE A)
HMA-O	HOT MIX ASPHALT (OPEN GRADED FRICTION COURSE)
HMA OD	HOT MIX ASPHALT OVERSIDE DRAIN
OD	OVERSIDE DRAIN
PSE	PUBLIC SERVICE EASEMENT
Rem	REMOVE
RPM	REMOVE PAVEMENT MARKING
Saw	SAWCUT
SBTG	STEEL-BACKED TIMBER GUARDRAIL

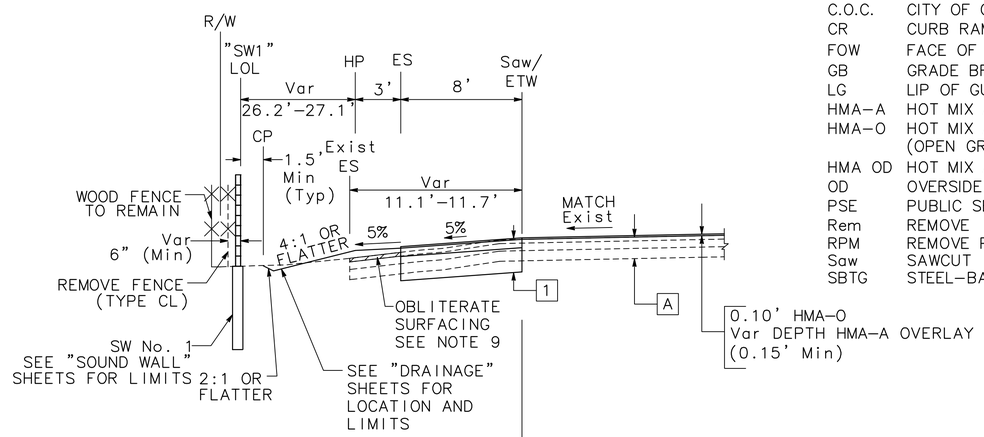

WB ROUTE 32
"WB" 113+50 TO "WB" 114+00.00

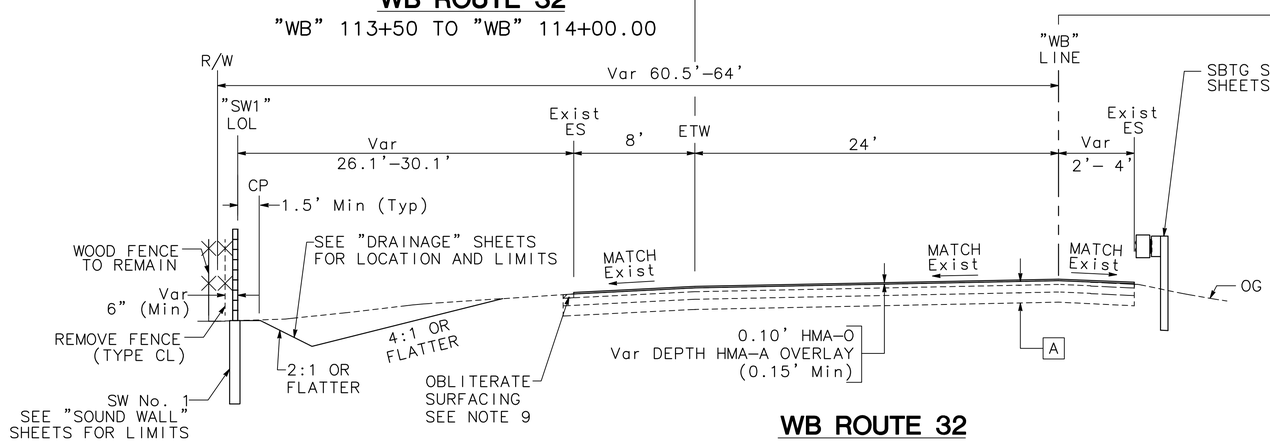

WB ROUTE 32
"WB" 112+00.00 TO "WB" 114+00.00

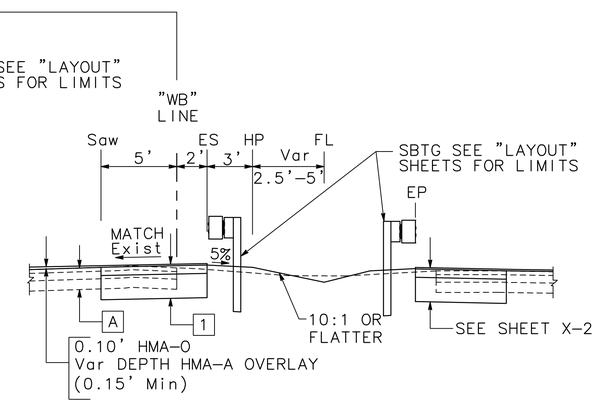

WB ROUTE 32
"WB"112+50.00 Rt TO "WB" 114+00.00

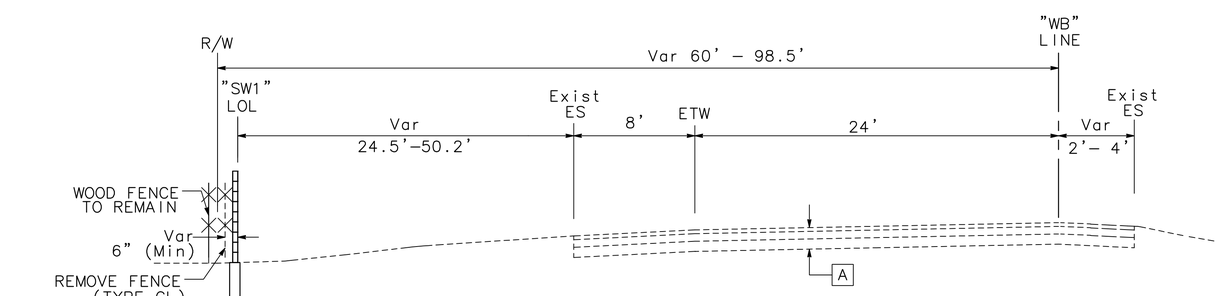

WB ROUTE 32
"WB" 100+43.94 TO "WB" 112+00.00

TYPICAL CROSS SECTIONS
NO SCALE

X-1

STATE OF CALIFORNIA - DEPARTMENT OF TRANSPORTATION
Caltrans
CONSULTANT FUNCTIONAL SUPERVISOR: ROBERT MATTHEW BROGAN
CALCULATED-DESIGNED BY: J. PANGBURN
CHECKED BY: M. BROGAN
REVISED BY
DATE REVISED

LAST REVISION 00-00-00
DATE PLOTTED => $DATE
TIME PLOTTED => $TIME

PATH: V:\Chico-55-0131-SR32 Widening\CADD\Drawing\
FILE NAME: sr32_X1-X8
PLOT DATE: Dec 20, 2011-08:39:08am
CAD USER: amillar

Dist	COUNTY	ROUTE	POST MILES TOTAL PROJECT	SHEET No.	TOTAL SHEETS
03	But	32	10.3/11.3	3	144

R.M. Brogan 12-22-11
REGISTERED CIVIL ENGINEER DATE

DECEMBER 22, 2011
PLANS APPROVAL DATE

REGISTERED PROFESSIONAL ENGINEER ROBERT MATTHEW BROGAN No. 63854 Exp. 9/30/12 CIVIL STATE OF CALIFORNIA

THE STATE OF CALIFORNIA OR ITS OFFICERS OR AGENTS SHALL NOT BE RESPONSIBLE FOR THE ACCURACY OR COMPLETENESS OF SCANNED COPIES OF THIS PLAN SHEET.

MARK THOMAS & CO., INC.
7300 FOLSOM BLVD STE 203
SACRAMENTO, CA 95826

CITY OF CHICO
CAPITAL PROJECT SERVICES
411 MAIN STREET
CHICO, CA 95927

NOTES:

1. SEE SHEET X-1 FOR ADDITIONAL NOTES.

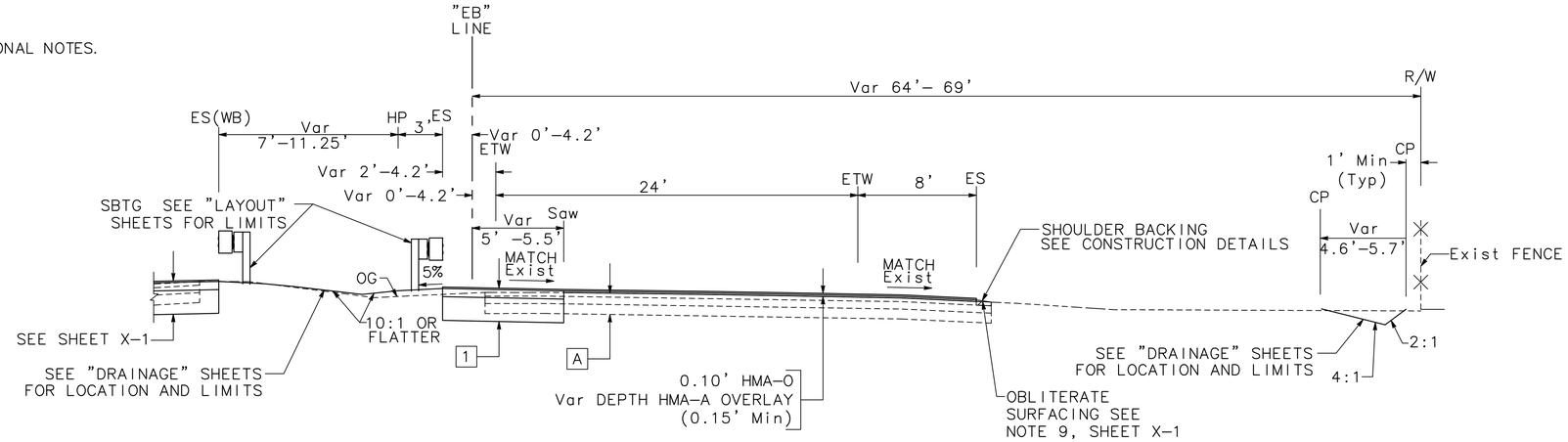

EB ROUTE 32

"EB"112+29.70 TO "EB"114+00.00

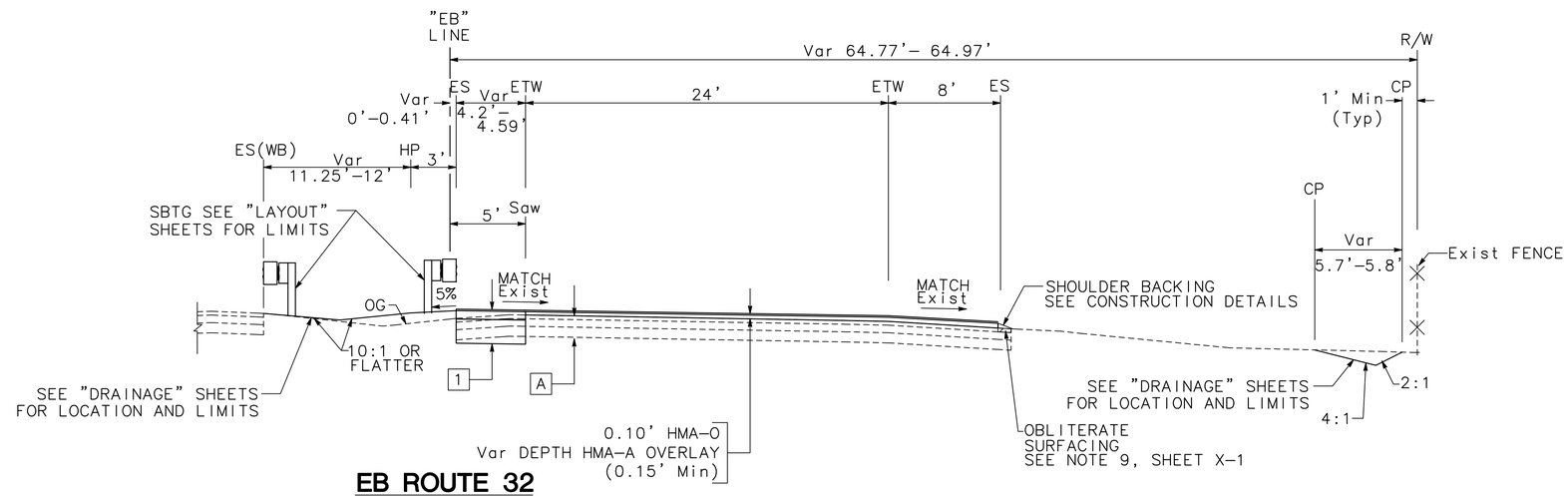

EB ROUTE 32

"EB"112+00.00 TO "EB"112+29.70

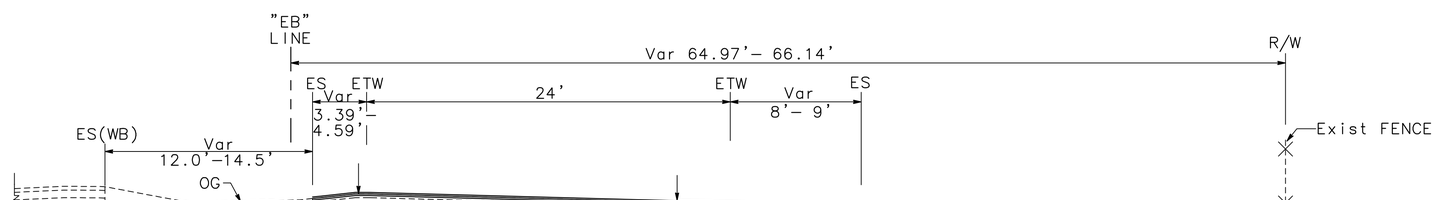

EB ROUTE 32

"EB"110+25.00 TO "EB"112+00.00

TYPICAL CROSS SECTIONS

NO SCALE

X-2

STATE OF CALIFORNIA - DEPARTMENT OF TRANSPORTATION

Caltrans

CONSULTANT FUNCTIONAL SUPERVISOR: ROBERT MATTHEW BROGAN

CALCULATED-DESIGNED BY: J. PANGBURN

CHECKED BY: M. BROGAN

REVISED BY

DATE REVISED

PATH: V:\Chico-55-0131-SR32 Widening\CADD\Drawing\ FILE NAME: sr32_X1-X8 PLOT DATE: Dec 20, 2011-08:39:48am CAD USER: amillar

LAST REVISION 00-00-00

DATE PLOTTED => $DATE
TIME PLOTTED => $TIME

Dist	COUNTY	ROUTE	POST MILES TOTAL PROJECT	SHEET No.	TOTAL SHEETS
03	But	32	10.3/11.3	4	144

R.M. Brogan 12-22-11
REGISTERED CIVIL ENGINEER DATE

DECEMBER 22, 2011
PLANS APPROVAL DATE

REGISTERED PROFESSIONAL ENGINEER ROBERT MATTHEW BROGAN No. 63854 Exp. 9/30/12 CIVIL STATE OF CALIFORNIA

THE STATE OF CALIFORNIA OR ITS OFFICERS OR AGENTS SHALL NOT BE RESPONSIBLE FOR THE ACCURACY OR COMPLETENESS OF SCANNED COPIES OF THIS PLAN SHEET.

MARK THOMAS & CO., INC.
7300 FOLSOM BLVD STE 203
SACRAMENTO, CA 95826

CITY OF CHICO
CAPITAL PROJECT SERVICES
411 MAIN STREET
CHICO, CA 95927

NOTES:

1. SEE SHEET X-1 FOR ADDITIONAL NOTES.

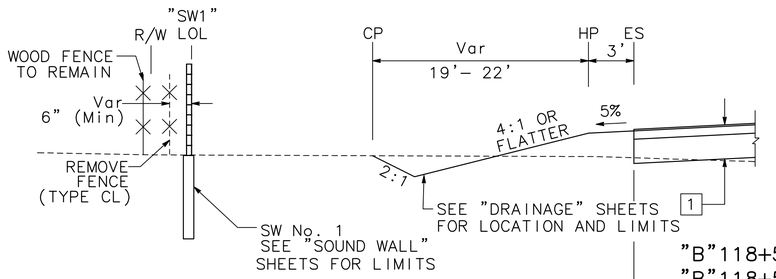

ROUTE 32
"B"118+50 Lt TO "B"124+00 Lt
"B"118+50 Lt TO "B"124+00 Lt

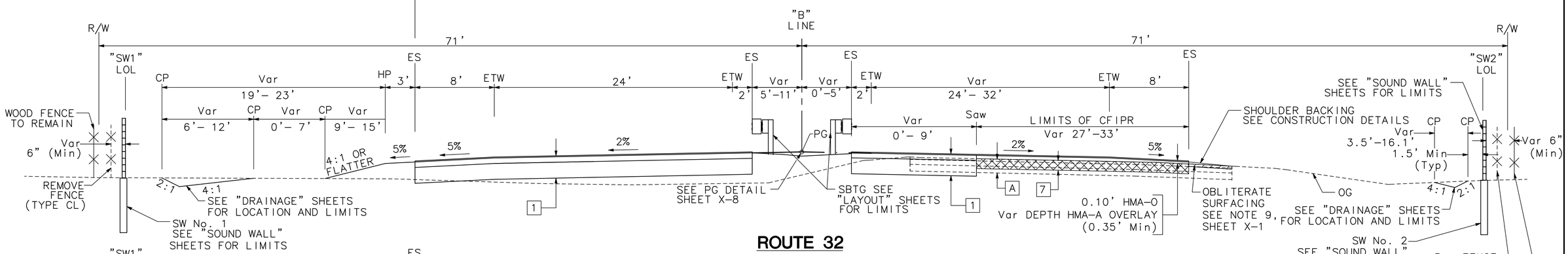

ROUTE 32
"B"117+54.92 TO "B"132+09.70

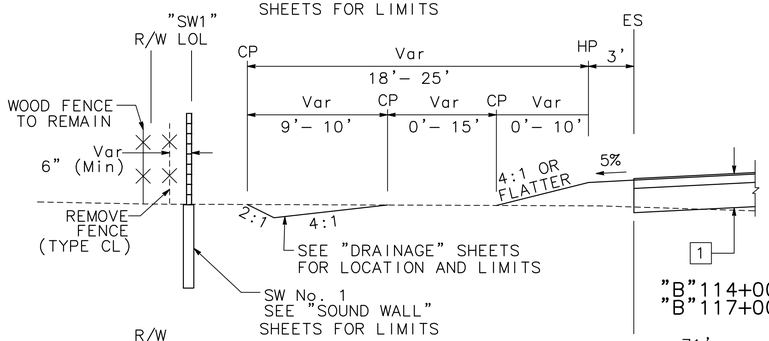

ROUTE 32
"B"114+00.00 Lt TO "B" 115+00.00 Lt
"B"117+00.00 Lt TO "B" 117+54.92 Lt

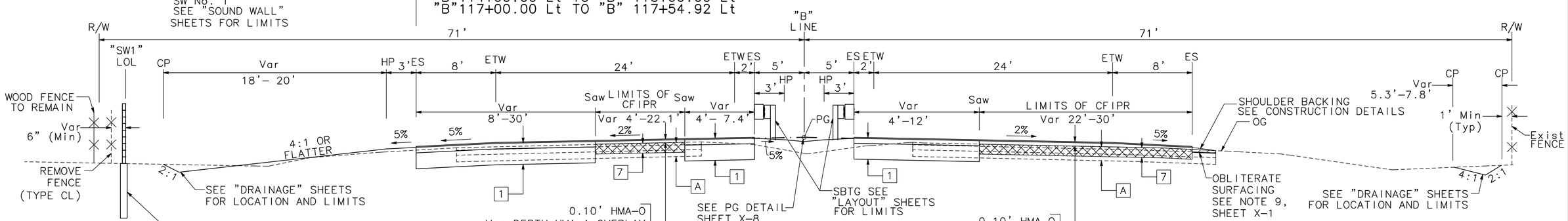

ROUTE 32
"B"114+00.00 TO "B" 117+54.92

TYPICAL CROSS SECTIONS
NO SCALE

X-3

STATE OF CALIFORNIA - DEPARTMENT OF TRANSPORTATION
Caltrans

CONSULTANT FUNCTIONAL SUPERVISOR: ROBERT MATTHEW BROGAN
CALCULATED-DESIGNED BY: J. PANGBURN
CHECKED BY: M. BROGAN
REVISED BY
DATE REVISED

PATH: V:\Chico-55-0131-SR32 Widening\CADD\Drawing\ FILE NAME: sr32_X1-X8 PLOT DATE: Dec 20, 2011-08:40:29am CAD USER: amillar

LAST REVISION 00-00-00 DATE PLOTTED => $DATE TIME PLOTTED => $TIME

BORDER LAST REVISED 7/2/2010 | USERNAME => $USER DGN FILE => $REQUEST | RELATIVE BORDER SCALE IS IN INCHES 0 1 2 3 | UNIT 0000 | PROJECT NUMBER & PHASE 0300000261

Dist	COUNTY	ROUTE	POST MILES TOTAL PROJECT	SHEET No.	TOTAL SHEETS
03	But	32	10.3/11.3	5	144

R.M. Brogan 12-22-11
REGISTERED CIVIL ENGINEER DATE

DECEMBER 22, 2011
PLANS APPROVAL DATE

REGISTERED PROFESSIONAL ENGINEER
ROBERT MATTHEW BROGAN
No. 63854
Exp. 9/30/12
CIVIL
STATE OF CALIFORNIA

THE STATE OF CALIFORNIA OR ITS OFFICERS OR AGENTS SHALL NOT BE RESPONSIBLE FOR THE ACCURACY OR COMPLETENESS OF SCANNED COPIES OF THIS PLAN SHEET.

MARK THOMAS & CO., INC.
7300 FOLSOM BLVD STE 203
SACRAMENTO, CA 95826

CITY OF CHICO
CAPITAL PROJECT SERVICES
411 MAIN STREET
CHICO, CA 95927

NOTES:

1. SEE SHEET X-1 FOR ADDITIONAL NOTES.

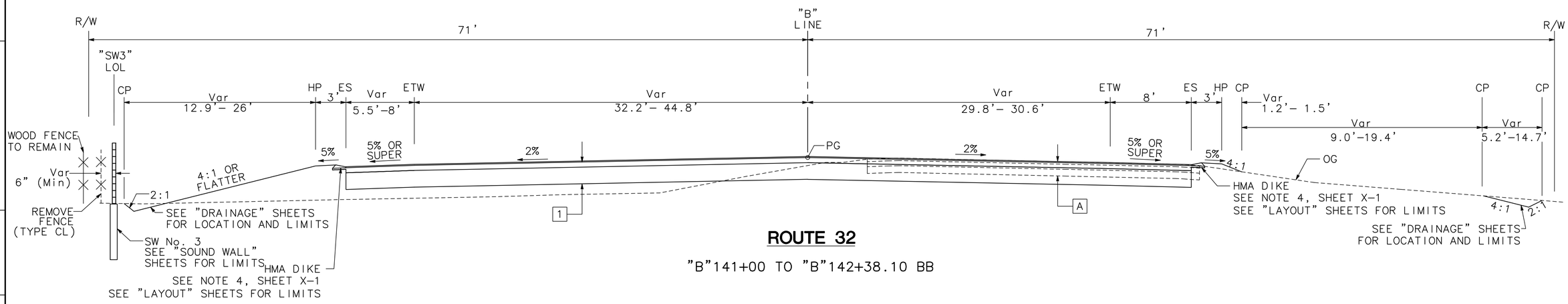

ROUTE 32

"B"141+00 TO "B"142+38.10 BB

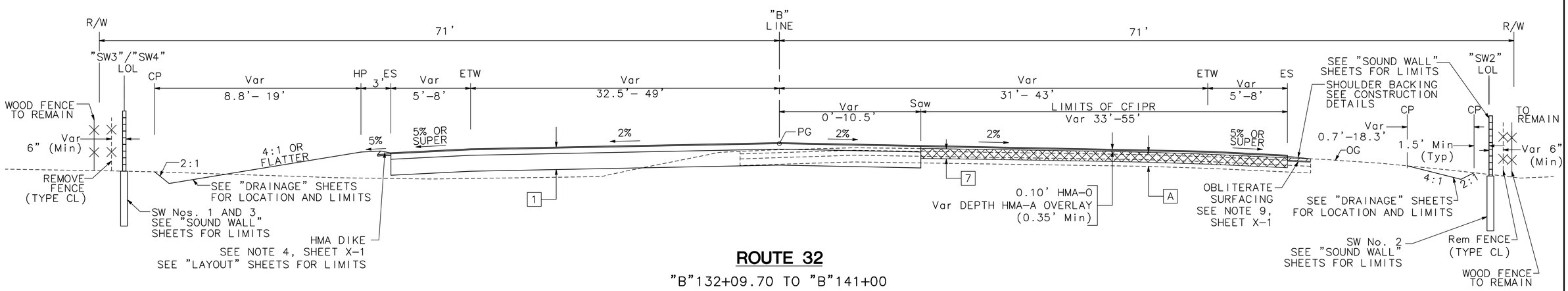

ROUTE 32

"B"132+09.70 TO "B"141+00

TYPICAL CROSS SECTIONS

NO SCALE

X-4

STATE OF CALIFORNIA – DEPARTMENT OF TRANSPORTATION

Caltrans

CONSULTANT FUNCTIONAL SUPERVISOR: ROBERT MATTHEW BROGAN

CALCULATED-DESIGNED BY: J. PANGBURN

CHECKED BY: M. BROGAN

REVISED BY

DATE REVISED

PATH: V:\Chico-55-0131-SR32 Widening\CADD\Drawing\ FILE NAME: sr32_X1-X8 PLOT DATE: Dec 20, 2011-08:40:56am CAD USER: amillar

LAST REVISION 00-00-00 DATE PLOTTED => $DATE TIME PLOTTED => $TIME

Dist	COUNTY	ROUTE	POST MILES TOTAL PROJECT	SHEET No.	TOTAL SHEETS
03	But	32	10.3/11.3	6	144

R.M. Brogan 12-22-11
REGISTERED CIVIL ENGINEER DATE

DECEMBER 22, 2011
PLANS APPROVAL DATE

REGISTERED PROFESSIONAL ENGINEER
ROBERT MATTHEW BROGAN
No. 63854
Exp. 9/30/12
CIVIL
STATE OF CALIFORNIA

THE STATE OF CALIFORNIA OR ITS OFFICERS OR AGENTS SHALL NOT BE RESPONSIBLE FOR THE ACCURACY OR COMPLETENESS OF SCANNED COPIES OF THIS PLAN SHEET.

MARK THOMAS & CO., INC.
7300 FOLSOM BLVD STE 203
SACRAMENTO, CA 95826

CITY OF CHICO
CAPITAL PROJECT SERVICES
411 MAIN STREET
CHICO, CA 95927

NOTES:

1. SEE SHEET X-1 FOR ADDITIONAL NOTES.

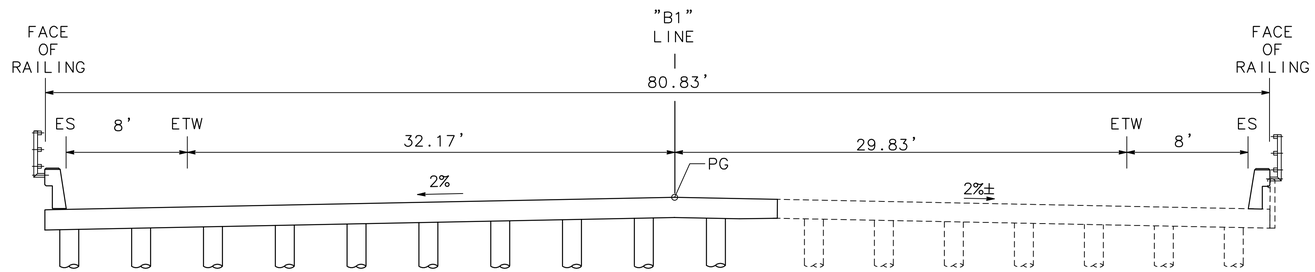

ROUTE 32
"B1"143+50.00 TO "B1"143+61.64 EB
SEE NOTE 8, SHEET X-1

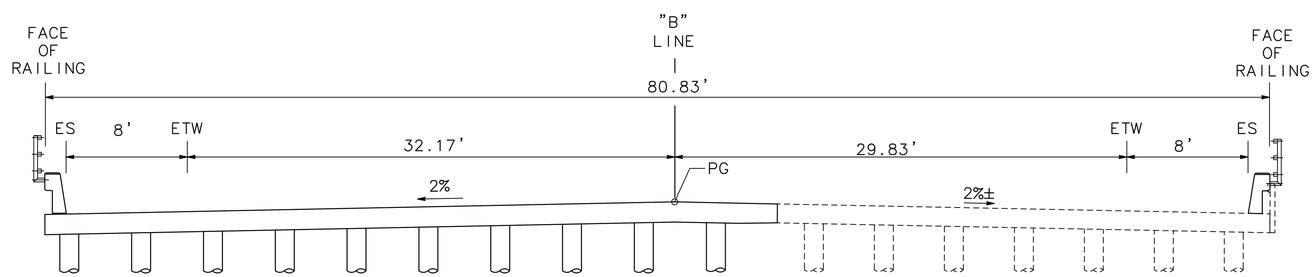

ROUTE 32
"B"142+38.10 BB TO "B"143+50.00 EB
SEE NOTE 8 , SHEET X-1

TYPICAL CROSS SECTIONS
NO SCALE

X-5

STATE OF CALIFORNIA - DEPARTMENT OF TRANSPORTATION
Caltrans

CONSULTANT FUNCTIONAL SUPERVISOR: ROBERT MATTHEW BROGAN
CALCULATED-DESIGNED BY: J. PANGBURN
CHECKED BY: M. BROGAN
REVISED BY
DATE REVISED

PATH: V:\Chico-55-0131-SR32 widening\CADD\Drawing\ FILE NAME: sr32_X1-X8 PLOT DATE: Dec 20, 2011-08:41:26am CAD USER: amillar

LAST REVISION 00-00-00 DATE PLOTTED => $DATE TIME PLOTTED => $TIME

Dist	COUNTY	ROUTE	POST MILES TOTAL PROJECT	SHEET No.	TOTAL SHEETS
03	But	32	10.3/11.3	7	144

R.M. Brogan 12-22-11
REGISTERED CIVIL ENGINEER DATE

DECEMBER 22, 2011
PLANS APPROVAL DATE

REGISTERED PROFESSIONAL ENGINEER ROBERT MATTHEW BROGAN No. 63854 Exp. 9/30/12 CIVIL STATE OF CALIFORNIA

THE STATE OF CALIFORNIA OR ITS OFFICERS OR AGENTS SHALL NOT BE RESPONSIBLE FOR THE ACCURACY OR COMPLETENESS OF SCANNED COPIES OF THIS PLAN SHEET.

MARK THOMAS & CO., INC.
7300 FOLSOM BLVD STE 203
SACRAMENTO, CA 95826

CITY OF CHICO
CAPITAL PROJECT SERVICES
411 MAIN STREET
CHICO, CA 95927

NOTES:

1. SEE SHEET X-1 FOR ADDITIONAL NOTES.

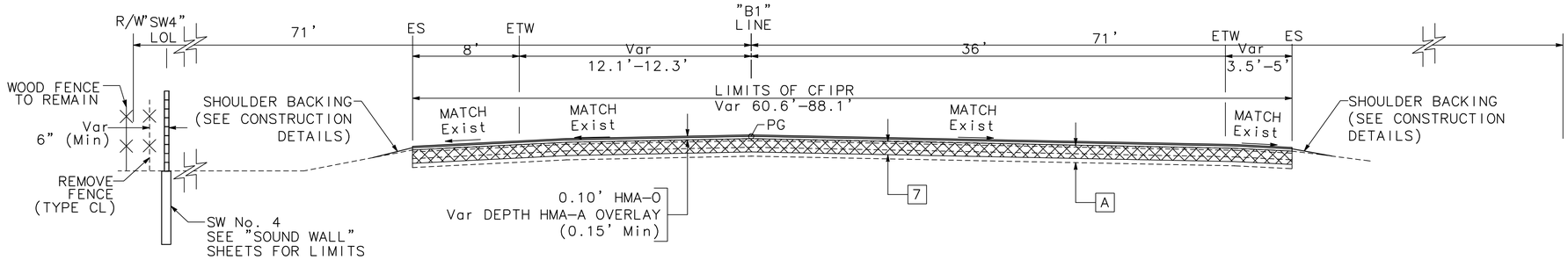

ROUTE 32

"B1" 151+00.00 TO "B1" 152+00.00

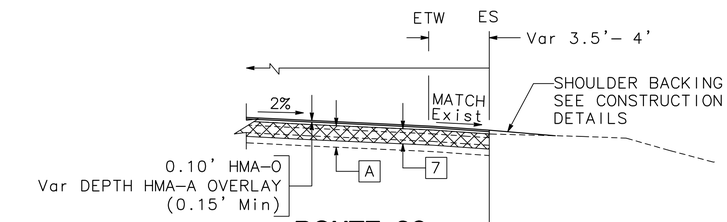

ROUTE 32

"B1"149+70 Rt TO "B1" 151+00.00 Rt

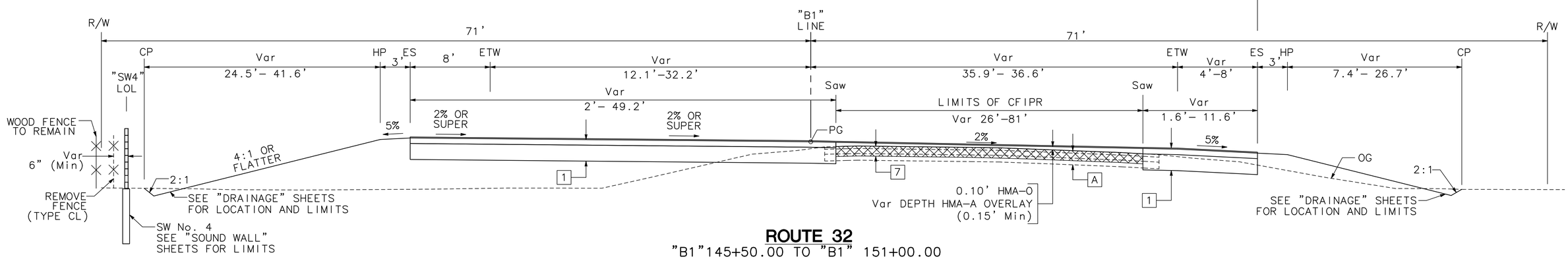

ROUTE 32

"B1"145+50.00 TO "B1" 151+00.00

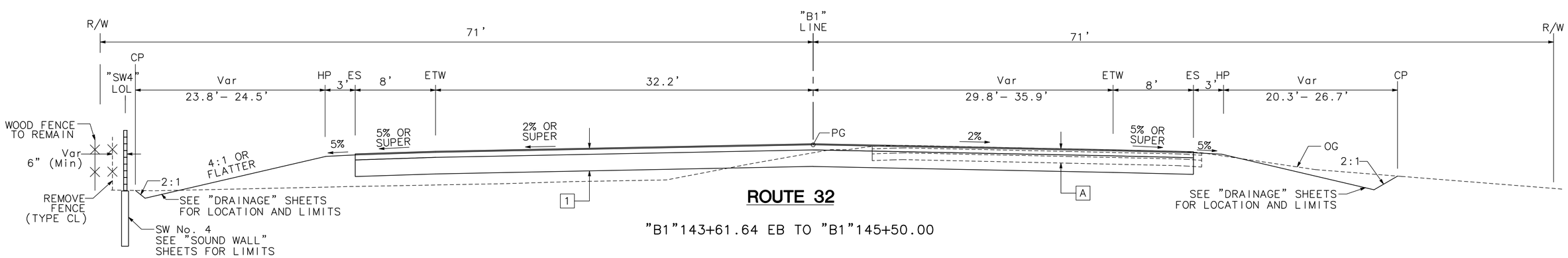

ROUTE 32

"B1"143+61.64 EB TO "B1"145+50.00

TYPICAL CROSS SECTIONS

NO SCALE

X-6

STATE OF CALIFORNIA - DEPARTMENT OF TRANSPORTATION
Caltrans

CONSULTANT FUNCTIONAL SUPERVISOR: ROBERT MATTHEW BROGAN

CALCULATED-DESIGNED BY: J. PANGBURN
CHECKED BY: M. BROGAN

REVISED BY | DATE REVISED

PATH: V:\Chico-55-0131-SR32 Widening\CADD\Drawing\ FILE NAME: sr32_X1-X8 PLOT DATE: Dec 20, 2011-08:41:46am CAD USER: amillar

LAST REVISION 00-00-00 | DATE PLOTTED => $DATE | TIME PLOTTED => $TIME

Dist	COUNTY	ROUTE	POST MILES TOTAL PROJECT	SHEET No.	TOTAL SHEETS
03	But	32	10.3/11.3	8	144

R.M. Brogan 12-22-11
REGISTERED CIVIL ENGINEER DATE

DECEMBER 22, 2011
PLANS APPROVAL DATE

REGISTERED PROFESSIONAL ENGINEER ROBERT MATTHEW BROGAN No. 63854 Exp. 9/30/12 CIVIL STATE OF CALIFORNIA

THE STATE OF CALIFORNIA OR ITS OFFICERS OR AGENTS SHALL NOT BE RESPONSIBLE FOR THE ACCURACY OR COMPLETENESS OF SCANNED COPIES OF THIS PLAN SHEET.

MARK THOMAS & CO., INC.
7300 FOLSOM BLVD STE 203
SACRAMENTO, CA 95826

CITY OF CHICO
CAPITAL PROJECT SERVICES
411 MAIN STREET
CHICO, CA 95927

NOTES:

1. SEE SHEET X-1 FOR ADDITIONAL NOTES.

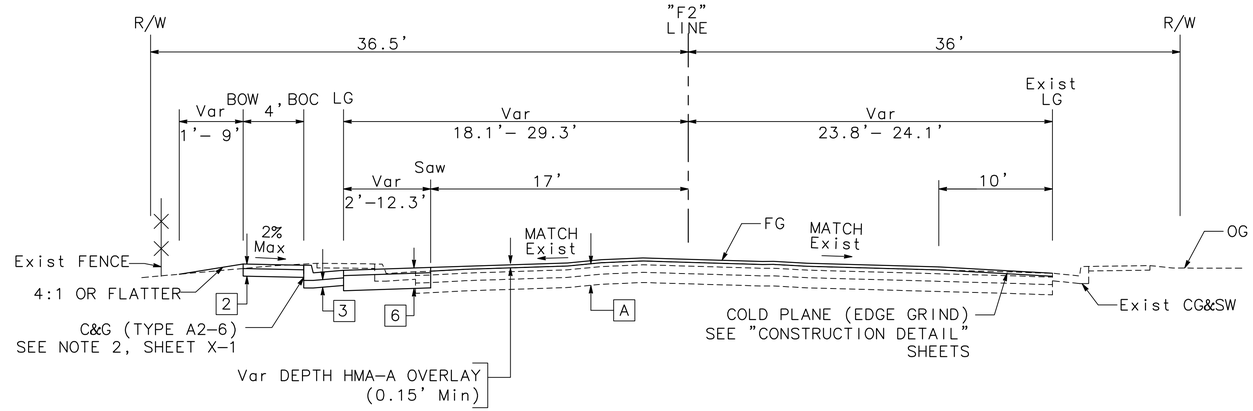

FOREST Ave

"F2"10+49.71 TO "F2"12+93.01

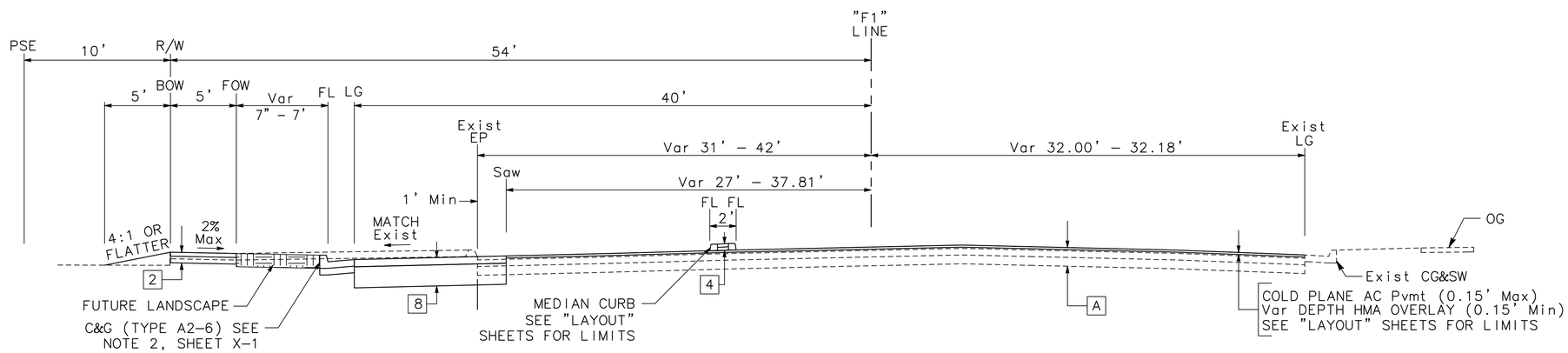

FOREST Ave

"F1"8+54.01 TO "F1"9+39.84

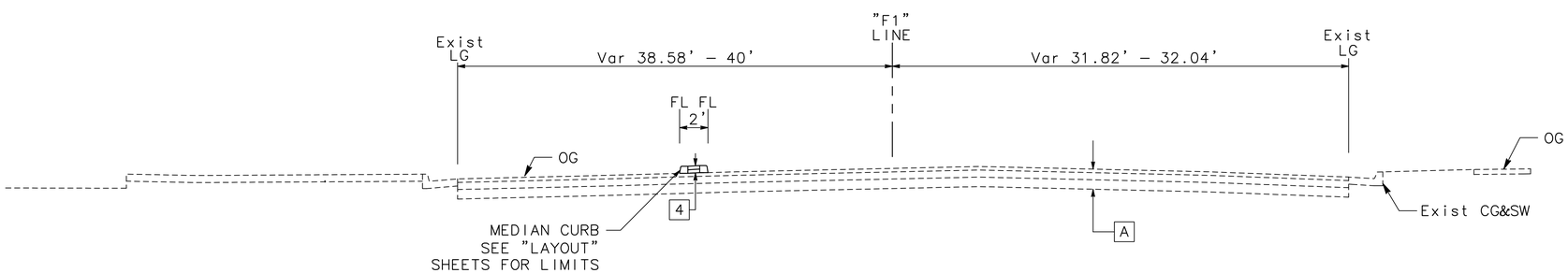

FOREST Ave

"F1"8+09.50 TO "F1"8+54.01

TYPICAL CROSS SECTIONS

NO SCALE

X-7

REVISED BY	DATE REVISED

CALCULATED-DESIGNED BY	J. PANGBURN
CHECKED BY	M. BROGAN
CONSULTANT FUNCTIONAL SUPERVISOR	ROBERT MATTHEW BROGAN

STATE OF CALIFORNIA - DEPARTMENT OF TRANSPORTATION

Caltrans

PATH: V:\Chico-55-0131-SR32 Widening\CADD\Drawing\ FILE NAME: sr32_X1-X8 PLOT DATE: Dec 20, 2011-08:42:37am CAD USER: amillar

LAST REVISION 00-00-00 DATE PLOTTED => $DATE TIME PLOTTED => $TIME

Dist	COUNTY	ROUTE	POST MILES TOTAL PROJECT	SHEET No.	TOTAL SHEETS
03	But	32	10.3/11.3	9	144

R.M. Brogan 12-22-11
REGISTERED CIVIL ENGINEER DATE

DECEMBER 22, 2011
PLANS APPROVAL DATE

REGISTERED PROFESSIONAL ENGINEER ROBERT MATTHEW BROGAN No. 63854 Exp. 9/30/12 CIVIL STATE OF CALIFORNIA

THE STATE OF CALIFORNIA OR ITS OFFICERS OR AGENTS SHALL NOT BE RESPONSIBLE FOR THE ACCURACY OR COMPLETENESS OF SCANNED COPIES OF THIS PLAN SHEET.

MARK THOMAS & CO., INC.
7300 FOLSOM BLVD STE 203
SACRAMENTO, CA 95826

CITY OF CHICO
CAPITAL PROJECT SERVICES
411 MAIN STREET
CHICO, CA 95927

NOTES:

1. SEE SHEET X-1 FOR ADDITIONAL NOTES.

LEGEND

- EMBANKMENT (NOT A PAY ITEM)
- ROADWAY EXCAVATION
- OBLITERATE SURFACING
- REMOVE CONCRETE
- DITCH EXCAVATION
- TOPSOIL (SEE LANDSCAPE PLANS)

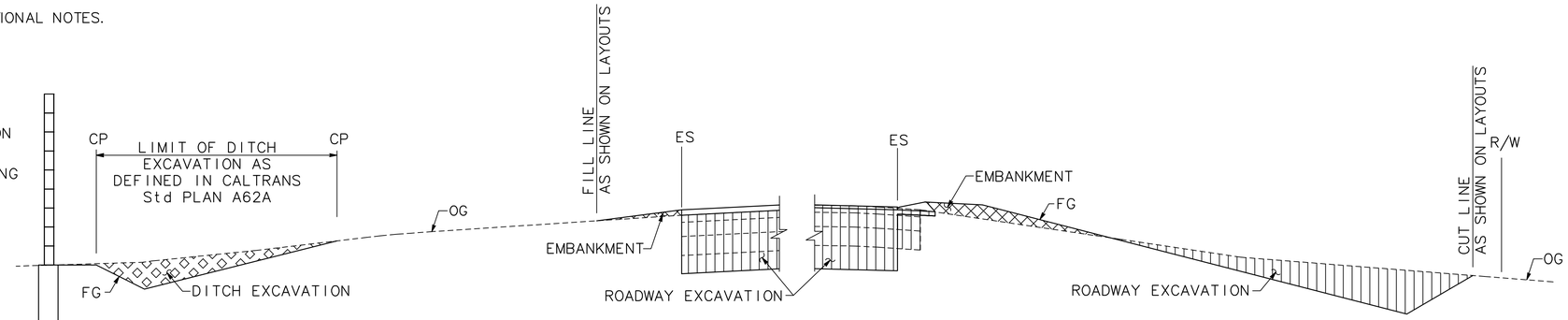

GRADING & EXCAVATION PAYMENT DETAIL

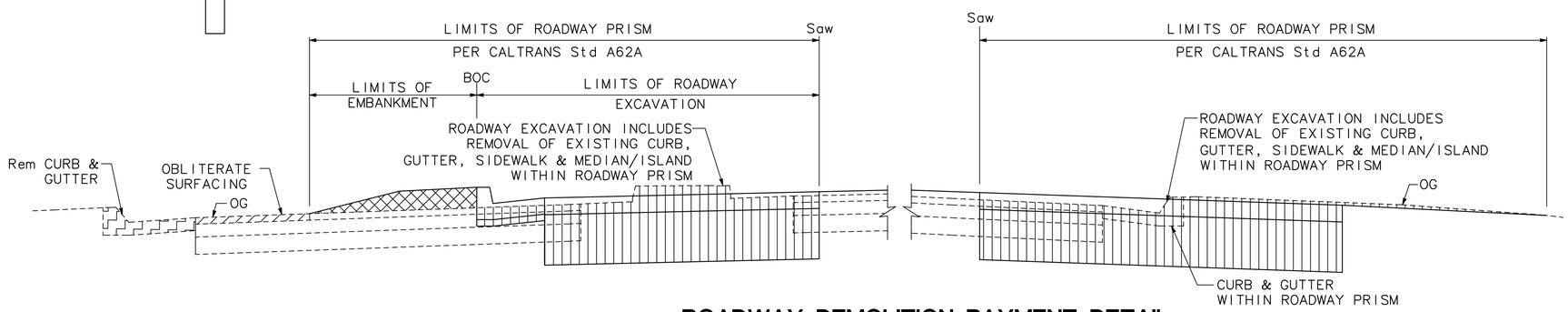

ROADWAY DEMOLITION PAYMENT DETAIL

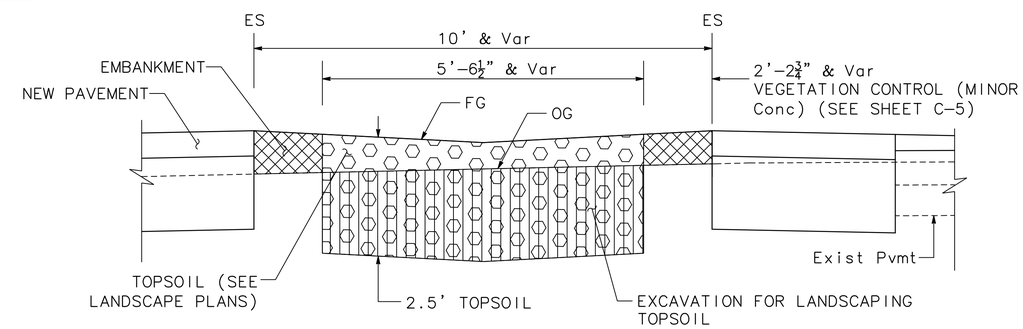

LANDSCAPE EXCAVATION PAYMENT DETAIL

"EB" 112+00 TO "B" 130+98.80

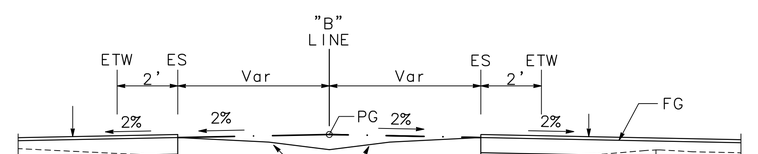

PROFILE GRADE DETAIL

"B"114+00.00 TO "B"132+09.70

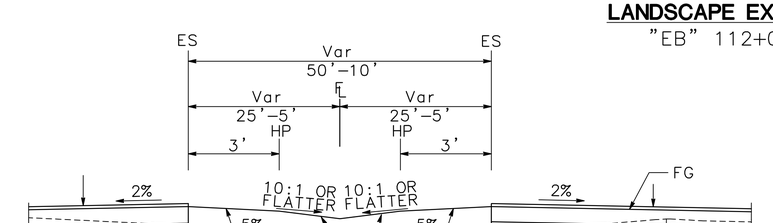

MEDIAN GRADING DETAIL

"EB"112+00 TO "B"130+98.80

TYPICAL CROSS SECTIONS

NO SCALE

X-8

STATE OF CALIFORNIA - DEPARTMENT OF TRANSPORTATION
Caltrans

CONSULTANT FUNCTIONAL SUPERVISOR: ROBERT MATTHEW BROGAN
CALCULATED-DESIGNED BY: J. PANGBURN
CHECKED BY: M. BROGAN
REVISED BY
DATE REVISED

LAST REVISION 00-00-00
DATE PLOTTED => $DATE
TIME PLOTTED => $TIME

PATH: V:\Chico-55-0131-SR32 Widening\CADD\Drawing\
FILE NAME: sr32_X1-X8
PLOT DATE: Dec 20, 2011-08:43:17am
CAD USER: amillar

BORDER LAST REVISED 7/2/2010
USERNAME => $USER
DGN FILE => $REQUEST
RELATIVE BORDER SCALE IS IN INCHES 0 1 2 3
UNIT 0000
PROJECT NUMBER & PHASE 0300000261

Dist	COUNTY	ROUTE	POST MILES TOTAL PROJECT	SHEET No.	TOTAL SHEETS
03	But	32	10.3/11.3	10	144

R.M. Brogan 12-22-11
REGISTERED CIVIL ENGINEER DATE

DECEMBER 22, 2011
PLANS APPROVAL DATE

REGISTERED PROFESSIONAL ENGINEER ROBERT MATTHEW BROGAN No. 63854 Exp. 9/30/12 CIVIL STATE OF CALIFORNIA

THE STATE OF CALIFORNIA OR ITS OFFICERS OR AGENTS SHALL NOT BE RESPONSIBLE FOR THE ACCURACY OR COMPLETENESS OF SCANNED COPIES OF THIS PLAN SHEET.

MARK THOMAS & CO., INC.
7300 FOLSOM BLVD STE 203
SACRAMENTO, CA 95826

CITY OF CHICO
CAPITAL PROJECT SERVICES
411 MAIN STREET
CHICO, CA 95927

CONSTRUCTION SURVEY CONTROL DATA

No.	POINT #	NORTHING	EASTING	ELEVATION	DESCRIPTION	APPROX. LOCATION
1	306	2394005.444	6612347.937	218.07	NAIL & SHINER	"EB" 93+43.84 7.26' Lt
2	45	2394071.451	6612612.194	236.92	SURVEY SPIKE	"EB" 95+86.15 117.13' Lt
3	44	2394299.759	6612690.013	221.62	MAG NAIL	"EB" 97+94.88 4.54' Lt
4	2	2394559.944	6612466.745	221.09	100d NAIL	"WB" 96+36.14 31.03' Lt
5	100	2394849.061	6612817.452	222.76	100d NAIL	"WB" 100+08.07 210.19' Rt
6	46	2394679.003	6612882.376	222.43	MAG NAIL	"WB" 100+56.49 36.65' Lt
7	43	2394417.654	6612864.782	222.95	MAG NAIL	"EB" 100+04.24 11.53' Lt
8	1	2394085.704	6613073.497	220.47	MAG NAIL	"EB" 100+76.03 376.54' Rt
9	42	2394526.532	6613225.231	222.65	PK & SHINER	"EB" 103+79.37 8.57' Lt
10	41	2394678.740	6613309.075	223.73	MAG NAIL & SHINER	"WB" 104+82.60 29.88' Lt
11	40	2394699.823	6613712.040	224.64	MAG NAIL	"WB" 108+90.13 30.00' Lt
12	39	2394802.262	6614161.163	227.37	MAG NAIL	"WB" 113+53.99 33.16' Lt
13	38	2394892.438	6614607.890	229.02	MAG NAIL & SHINER	"B" 118+09.67 16.58' Lt
14	36	2395092.766	6615483.081	234.20	MAG NAIL	"B" 127+07.16 8.31' Rt
15	35	2395331.635	6616371.263	238.78	MAG NAIL & SHINER	"B" 136+26.85 0.88' Lt
16	2008	2395290.569	6616499.501	236.51	6"x 6" Conc Mon	"F1" 9+19.88 64.34' Lt
17	2007	2395250.183	6616539.036	237.40	6"x 6" Conc Mon	"F1" 8+75.03 29.96' Lt
18	108	2395425.580	6616578.949	240.34	SURVEY SPIKE	"F2" 10+44.44 32.00' Rt
19	34	2395439.082	6616810.209	242.16	MAG NAIL & SHINER	"B" 140+78.72 4.85' Rt
20	32	2395672.334	6617677.141	244.03	100d NAIL	"B1" 149+76.42 19.71' Lt
21	30	2395895.321	6618549.110	249.09	100d NAIL	"B" 158+76.46 2.07' Lt
22	8	2395406.853	6618614.258	247.44	SURVEY SPIKE	"B" 158+17.40 487.17' Rt

DATUM

BEARINGS, DISTANCES AND COORDINATES SHOWN ARE CCS83 ZONE 2 EPOCH 1991.35. DISTANCES ARE IN US SURVEY FEET. AN AVERAGE COMBINED FACTOR OF 0.99997 WAS USED FOR THIS PROJECT. TO OBTAIN GROUND DISTANCE DIVIDE BY THE COMBINED GRID FACTOR.

ELEVATIONS ARE NAVD88, BASED ON NGS POINT "Y" (PID KS1931) HAVING AN ELEVATION OF 239.81 FEET.

ALL ELEVATIONS ARE DERIVED FROM GPS OBSERVATIONS AND AN ACCURATE GEOID MODEL, AS DETAILED IN THE REPORT ON FILE WITH CALTRANS. THE FOLLOWING BENCHMARKS WERE HELD TO DETERMINE NAVD 88 ELEVATIONS:

- KS1931-Y, A FIRST ORDER, CLASS II VERTICAL POSITION, LOCATED ON STATE ROUTE 99 NORTHWESTERLY OF THIS NETWORK AND IS OUTSIDE THE MAPPING LIMITS. A NAVD 88 ELEVATION OF 239.81 WAS HELD FOR THIS BENCHMARK.
- KS1933-P 1434, A FIRST ORDER, CLASS II VERTICAL POSITION, LOCATED WEST OF THIS NETWORK AND IS OUTSIDE THE MAPPING LIMITS. A NAVD 88 ELEVATION OF 210.80 FEET WAS HELD FOR THIS BENCHMARK.

ALL COORDINATES AND ELEVATIONS MUST BE VERIFIED PRIOR TO USE.

NOTES

1. FOR COMPLETE PROJECT CONTROL AND MONUMENTATION DATA, SEE THE SURVEY RECORDS ON FILE IN THE DISTRICT OFFICE.
2. CONTRACTOR SHALL COMPLY WITH BUSINESS AND PROFESSIONS CODE SECTION 8771(b) REGARDING REFERENCING, PRESERVING AND RECONSTRUCTING MONUMENTS, WHETHER OR NOT MONUMENTS ARE SHOWN IN THESE PLANS.
3. IF MONUMENT IS DAMAGED BY CONTRACTOR'S OPERATIONS, CONTRACTOR SHALL REPLACE AT CONTRACTOR'S COST.
4. "EB" AND "WB" LINES STATION 114+00 EQUAL "B" LINE STATION 114+00.
5. "B" LINE STATION 143+50 EQUALS "B1" LINE STATION 143+50.

LEGEND

CONTROL POINT

No CONTROL POINT NUMBER

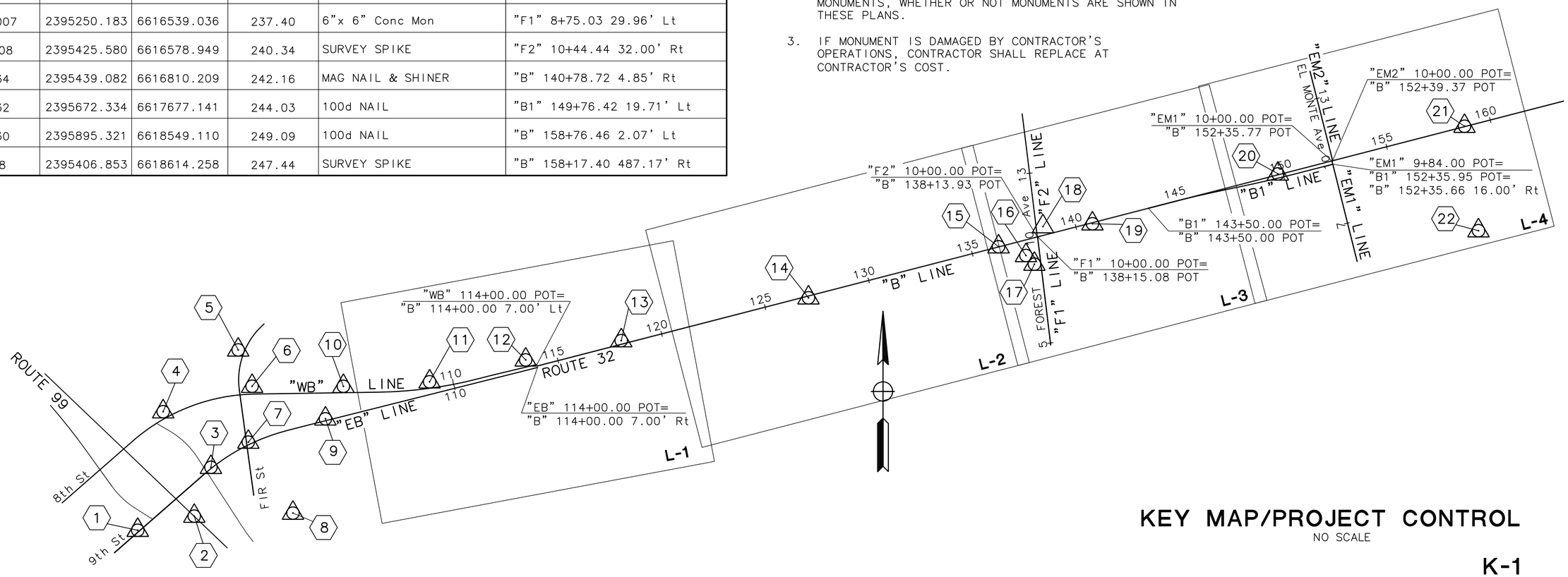

KEY MAP/PROJECT CONTROL

NO SCALE

K-1

STATE OF CALIFORNIA - DEPARTMENT OF TRANSPORTATION
Caltrans

CONSULTANT FUNCTIONAL SUPERVISOR: ROBERT MATTHEW BROGAN

CALCULATED-DESIGNED BY: J. PANGBURN
CHECKED BY: M. BROGAN

REVISED BY
DATE REVISED

PATH: V:\Chico-55-0131-SR32 Widening\CADD\Drawing\ FILE NAME: sr32_K1 PLOT DATE: Dec 20, 2011-08:44:02am CAD USER: amillar

LAST REVISION 00-00-00 DATE PLOTTED => $DATE TIME PLOTTED => $TIME

BORDER LAST REVISED 7/2/2010 | USERNAME => $USER DGN FILE => $REQUEST | RELATIVE BORDER SCALE IS IN INCHES 0 1 2 3 | UNIT 0000 | PROJECT NUMBER & PHASE 0300000261

Dist	COUNTY	ROUTE	POST MILES TOTAL PROJECT	SHEET No.	TOTAL SHEETS
03	But	32	10.3/11.3	11	144

R.M. Brogan 12-22-11
REGISTERED CIVIL ENGINEER DATE

DECEMBER 22, 2011
PLANS APPROVAL DATE

REGISTERED PROFESSIONAL ENGINEER ROBERT MATTHEW BROGAN No. 63854 Exp. 9/30/12 CIVIL STATE OF CALIFORNIA

THE STATE OF CALIFORNIA OR ITS OFFICERS OR AGENTS SHALL NOT BE RESPONSIBLE FOR THE ACCURACY OR COMPLETENESS OF SCANNED COPIES OF THIS PLAN SHEET.

MARK THOMAS & CO., INC.
7300 FOLSOM BLVD STE 203
SACRAMENTO, CA 95826

CITY OF CHICO
CAPITAL PROJECT SERVICES
411 MAIN STREET
CHICO, CA 95927

NOTES:

1. FOR COMPLETE RIGHT OF WAY AND ACCURATE ACCESS DATA, SEE RIGHT OF WAY RECORD MAPS AT DISTRICT OFFICE.
2. ALL CURVE CALLOUTS TO CURB AND GUTTER ARE AT FLOWLINE UNLESS OTHERWISE NOTED.
3. FOR CURB RETURN, CURB RAMP, AND SAWCUT LOCATIONS AND DETAILS, SEE CONSTRUCTION DETAIL SHEETS.
4. FOR SOUND WALL LOCATIONS AND DETAILS, SEE SOUND WALL PLAN SHEETS.
5. SEE TREE REMOVAL PLAN SHEETS FOR TREE REMOVAL LOCATIONS.
6. SEE SHEET C-9 FOR LIMITS OF COLD PLANE FOAM ASPHALT REHABILITATION.
7. SEE SHEETS L-5 THRU L-8 FOR DEMOLITION, SAWCUT LOCATIONS AND COLD PLANE LIMITS.
8. FOR FENCE REMOVAL LIMITS, SEE SOUND WALL PLAN SHEETS.

LEGEND – LAYOUTS ONLY

- OVERLAY LIMITS
- NEW STRUCTURAL SECTION
- OBLITERATE SURFACING (SEE L-5 THRU L-8)
- MINOR Conc (TEXTURED PAVING)
- COLD PLANE AC Pvmt (0.15' Max) (SEE L-5 THRU L-8)
- REMOVE CONCRETE (SEE L-5 THRU L-8)
- X / X-X — Const DETAIL REFERENCE
- △ — EXISTING SURVEY MONUMENT TO REMAIN
- No — SURVEY CONTROL POINT NUMBER (SEE SHEET K-1)

CURVE TABLE				
CURVE	R	△	Tan	L
1	2012'	13°37'00"	240.21'	478.16'

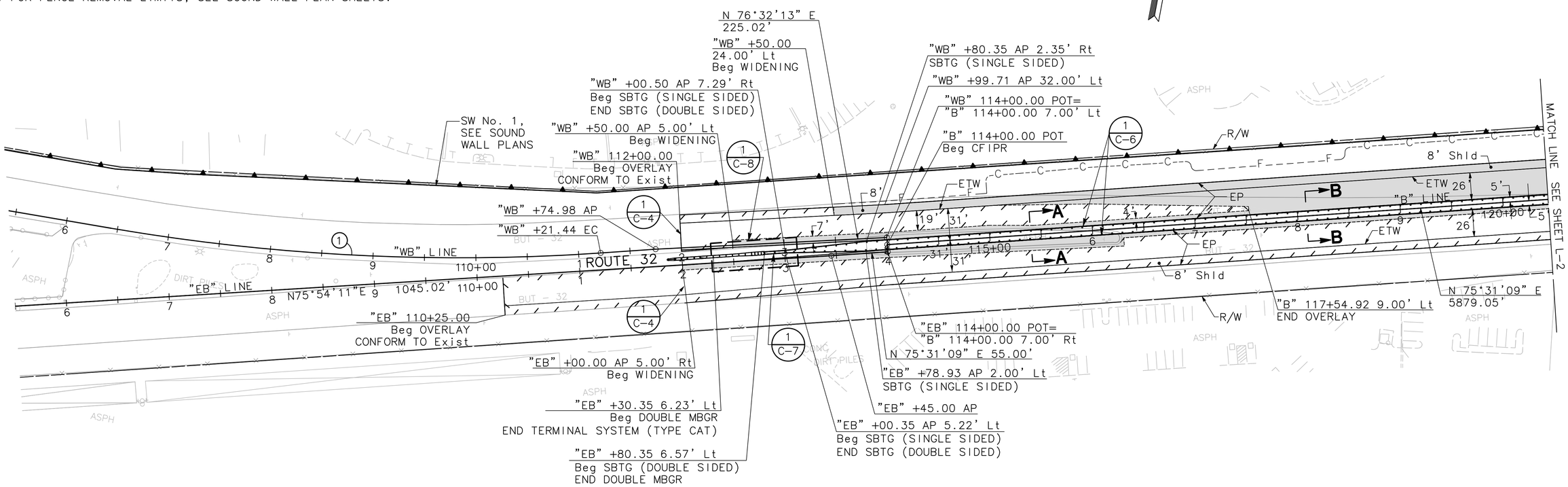

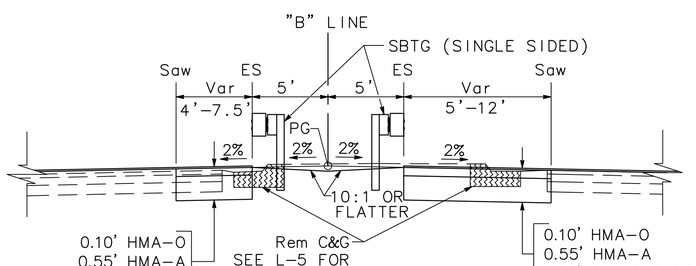

SECTION A-A
NO SCALE

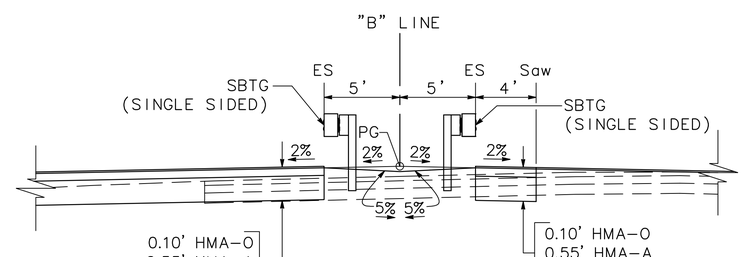

SECTION B-B
NO SCALE

LAYOUT
SCALE: 1" = 50'

L-1

THIS PLAN ACCURATE FOR LAYOUT ONLY

STATE OF CALIFORNIA – DEPARTMENT OF TRANSPORTATION
Caltrans

CONSULTANT FUNCTIONAL SUPERVISOR: ROBERT MATTHEW BROGAN
CALCULATED-DESIGNED BY: J. PANGBURN
CHECKED BY: M. BROGAN
REVISED BY / DATE REVISED

PATH: V:\Chico-55-0131-SR32 Widening\CADD\Drawing\ FILE NAME: sr32_L1-L4 PLOT DATE: Dec 20, 2011-08:45:07am CAD USER: amillar

LAST REVISION 00-00-00 | DATE PLOTTED => $DATE | TIME PLOTTED => $TIME

Dist	COUNTY	ROUTE	POST MILES TOTAL PROJECT	SHEET No.	TOTAL SHEETS
03	But	32	10.3/11.3	12	144

R.M. Brogan 12-22-11
REGISTERED CIVIL ENGINEER DATE

DECEMBER 22, 2011
PLANS APPROVAL DATE

REGISTERED PROFESSIONAL ENGINEER ROBERT MATTHEW BROGAN No. 63854 Exp. 9/30/12 CIVIL STATE OF CALIFORNIA

THE STATE OF CALIFORNIA OR ITS OFFICERS OR AGENTS SHALL NOT BE RESPONSIBLE FOR THE ACCURACY OR COMPLETENESS OF SCANNED COPIES OF THIS PLAN SHEET.

MARK THOMAS & CO., INC.
7300 FOLSOM BLVD STE 203
SACRAMENTO, CA 95826

CITY OF CHICO
CAPITAL PROJECT SERVICES
411 MAIN STREET
CHICO, CA 95927

NOTES:

1. FOR COMPLETE RIGHT OF WAY AND ACCURATE ACCESS DATA, SEE RIGHT OF WAY RECORD MAPS AT DISTRICT OFFICE.
2. FOR ADDITIONAL NOTES, LEGEND, AND ABBREVIATIONS, SEE SHEET L-1.

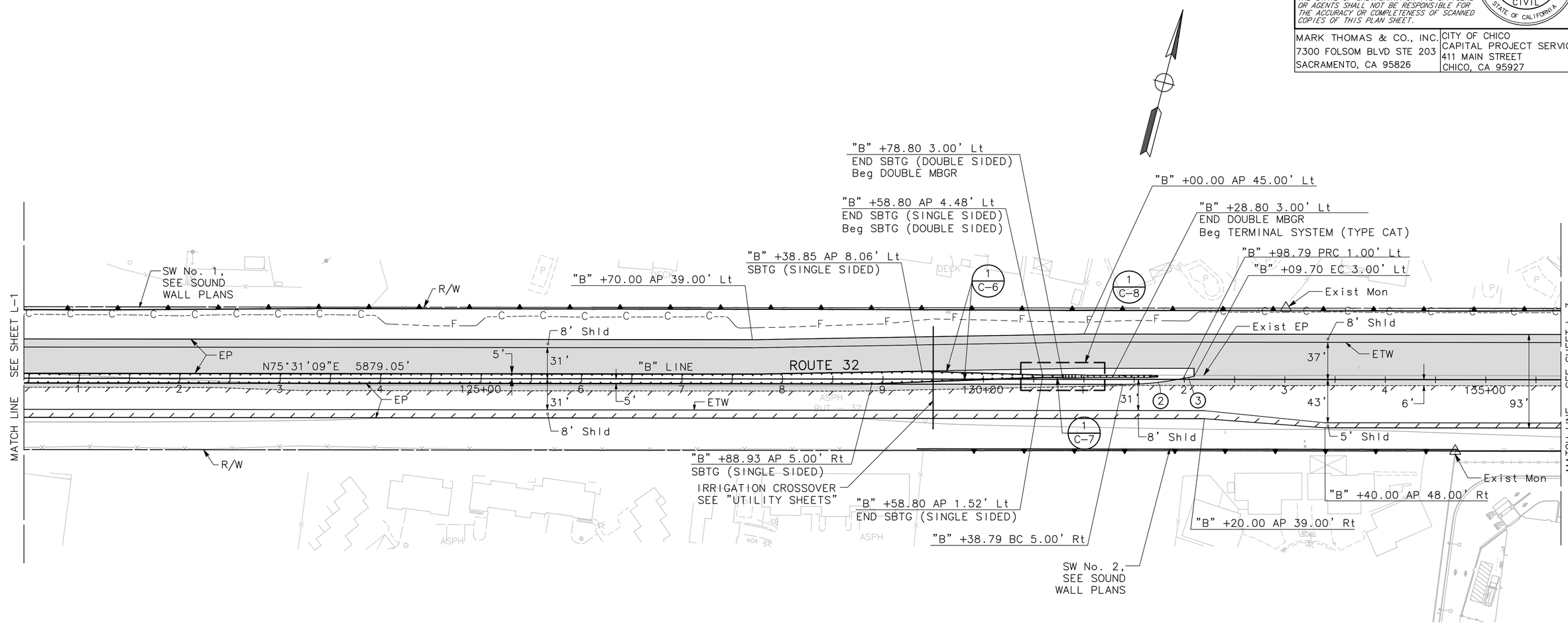

CURVE TABLE				
CURVE	R	△	Tan	L
2	303'	11°25'16"	30.30'	60.40'
3	303'	2°05'51"	5.55'	11.09'

LAYOUT

SCALE: 1" = 50'

L-2

THIS PLAN ACCURATE FOR LAYOUT ONLY

STATE OF CALIFORNIA - DEPARTMENT OF TRANSPORTATION
Caltrans

CONSULTANT FUNCTIONAL SUPERVISOR: ROBERT MATTHEW BROGAN
CALCULATED-DESIGNED BY: J. PANGBURN
CHECKED BY: M. BROGAN
REVISED BY
DATE REVISED

PATH: V:\Chico-55-0131-SR32 Widening\CADD\Drawing\ FILE NAME: sr32_L1-L4 PLOT DATE: Dec 20, 2011-08:45:29am CAD USER: amillar

LAST REVISION 00-00-00 | DATE PLOTTED => $DATE | TIME PLOTTED => $TIME

BORDER LAST REVISED 7/2/2010 | USERNAME => $USER | DGN FILE => $REQUEST | RELATIVE BORDER SCALE IS IN INCHES 0 1 2 3 | UNIT 0000 | PROJECT NUMBER & PHASE 0300000261

Dist	COUNTY	ROUTE	POST MILES TOTAL PROJECT	SHEET No.	TOTAL SHEETS
03	But	32	10.3/11.3	13	144

R.M. Brogan 12-22-11
REGISTERED CIVIL ENGINEER DATE

DECEMBER 22, 2011
PLANS APPROVAL DATE

REGISTERED PROFESSIONAL ENGINEER ROBERT MATTHEW BROGAN No. 63854 Exp. 9/30/12 CIVIL STATE OF CALIFORNIA

THE STATE OF CALIFORNIA OR ITS OFFICERS OR AGENTS SHALL NOT BE RESPONSIBLE FOR THE ACCURACY OR COMPLETENESS OF SCANNED COPIES OF THIS PLAN SHEET.

MARK THOMAS & CO., INC.
7300 FOLSOM BLVD STE 203
SACRAMENTO, CA 95826

CITY OF CHICO
CAPITAL PROJECT SERVICES
411 MAIN STREET
CHICO, CA 95927

NOTES:

1. FOR COMPLETE RIGHT OF WAY AND ACCURATE ACCESS DATA, SEE RIGHT OF WAY RECORD MAPS AT DISTRICT OFFICE.
2. FOR SOUND WALL LOCATIONS AND DETAILS, SEE SOUND WALL PLAN SHEETS.
3. FOR CURB RETURN AND CURB RAMP AND SAWCUT LOCATIONS AND DETAILS, SEE CONSTRUCTION DETAIL SHEETS.
4. FOR ADDITIONAL NOTES, LEGEND, AND ABBREVIATIONS, SEE SHEET L-1.

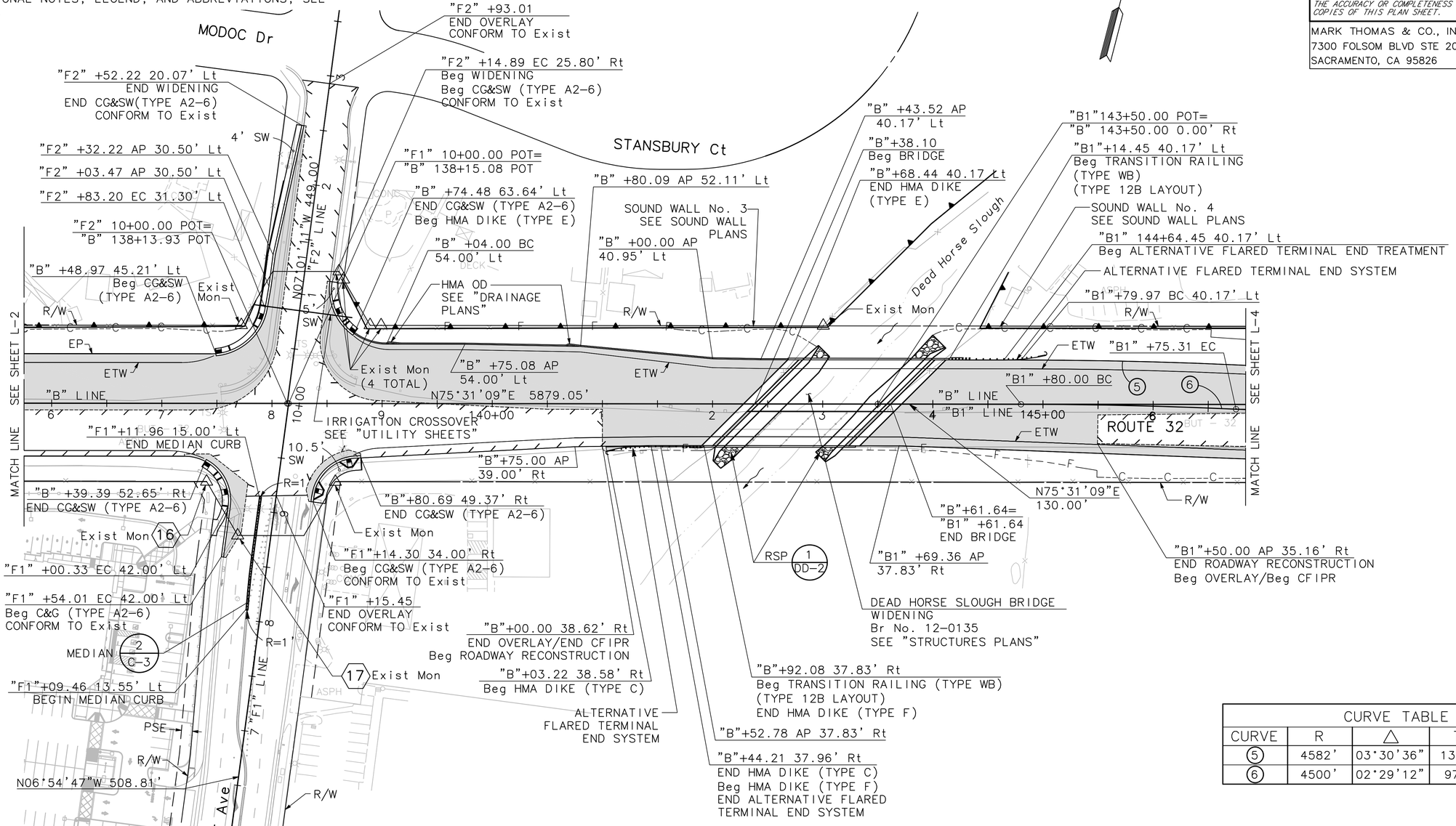

CURVE TABLE				
CURVE	R	△	Tan	L
5	4582'	03°30'36"	138.86'	277.64'
6	4500'	02°29'12"	97.67'	195.31'

LAYOUT

SCALE: 1" = 50'

L-3

THIS PLAN ACCURATE FOR LAYOUT ONLY

STATE OF CALIFORNIA – DEPARTMENT OF TRANSPORTATION

Caltrans

CONSULTANT FUNCTIONAL SUPERVISOR: ROBERT MATTHEW BROGAN

CALCULATED-DESIGNED BY: J. PANGBURN
CHECKED BY: M. BROGAN

REVISED BY
DATE REVISED

PATH: V:\Chico-55-0131-SR32 Widening\CADD\Drawing\ FILE NAME: sr32_L1-L4 PLOT DATE: Dec 20, 2011-10:15:21am CAD USER: amillar

LAST REVISION 00-00-00 | DATE PLOTTED => $DATE | TIME PLOTTED => $TIME

Dist	COUNTY	ROUTE	POST MILES TOTAL PROJECT	SHEET No.	TOTAL SHEETS
03	But	32	10.3/11.3	14	144

R. M. Brogan 12-22-11
REGISTERED CIVIL ENGINEER DATE

DECEMBER 22, 2011
PLANS APPROVAL DATE

REGISTERED PROFESSIONAL ENGINEER ROBERT MATTHEW BROGAN No. 63854 Exp. 9/30/12 CIVIL STATE OF CALIFORNIA

THE STATE OF CALIFORNIA OR ITS OFFICERS OR AGENTS SHALL NOT BE RESPONSIBLE FOR THE ACCURACY OR COMPLETENESS OF SCANNED COPIES OF THIS PLAN SHEET.

MARK THOMAS & CO., INC.
7300 FOLSOM BLVD STE 203
SACRAMENTO, CA 95826

CITY OF CHICO
CAPITAL PROJECT SERVICES
411 MAIN STREET
CHICO, CA 95927

NOTES:

1. FOR COMPLETE RIGHT OF WAY AND ACCURATE ACCESS DATA, SEE RIGHT OF WAY RECORD MAPS AT DISTRICT OFFICE.
2. FOR CURB RETURN, CURB RAMP, AND SAWCUT LOCATIONS AND DETAILS, SEE CONSTRUCTION DETAIL SHEETS.
3. FOR ADDITIONAL NOTES, LEGEND, AND ABBREVIATIONS SEE SHEET L-1.

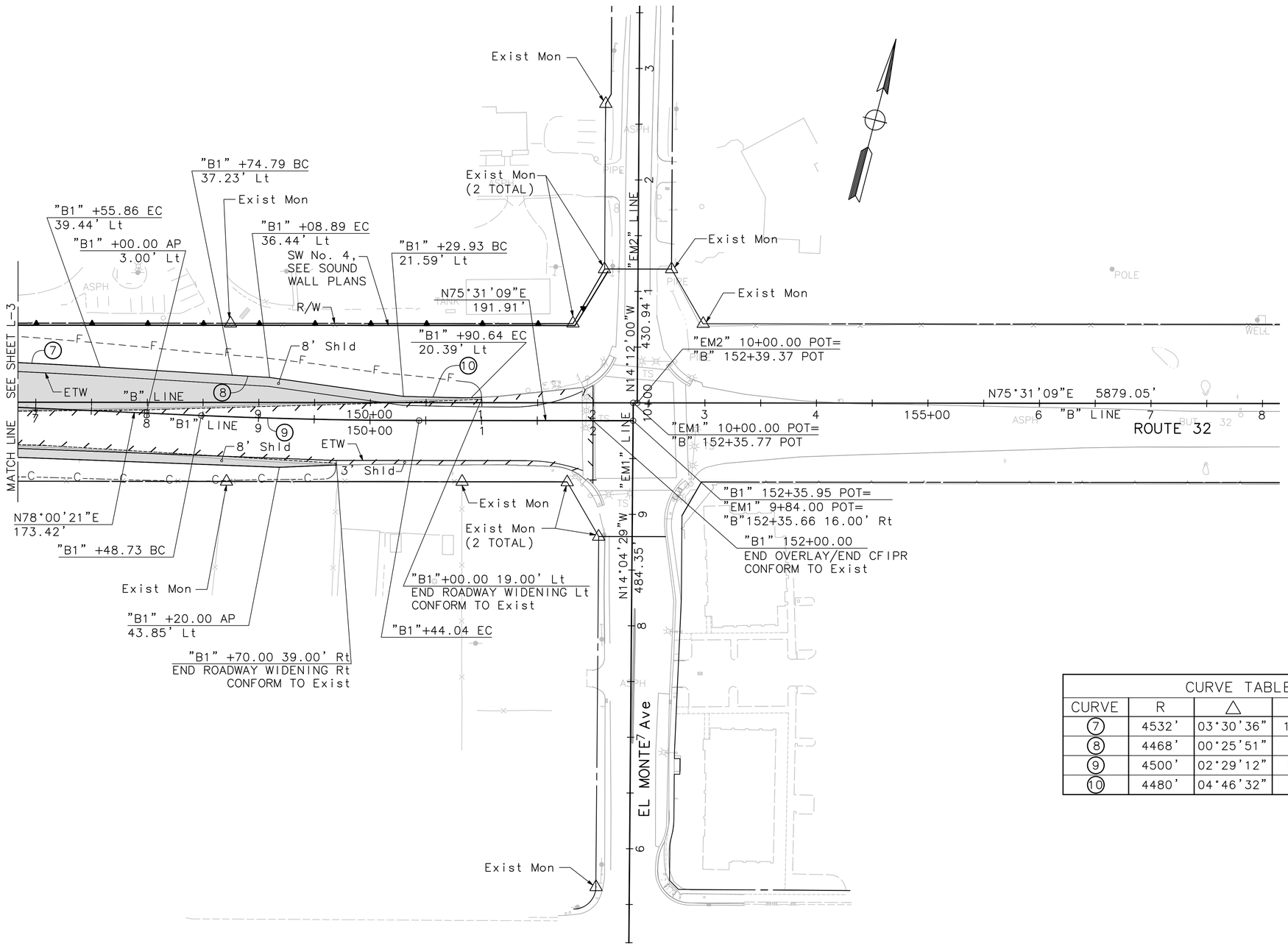

CURVE TABLE				
CURVE	R	△	Tan	L
7	4532'	03°30'36"	138.86'	277.64'
8	4468'	00°25'51"	16.79'	33.59'
9	4500'	02°29'12"	97.67'	195.31'
10	4480'	04°46'32"	30.32'	60.65'

LAYOUT

SCALE: 1" = 50'

L-4

THIS PLAN ACCURATE FOR LAYOUT ONLY

STATE OF CALIFORNIA - DEPARTMENT OF TRANSPORTATION
Caltrans
CONSULTANT FUNCTIONAL SUPERVISOR: ROBERT MATTHEW BROGAN
CALCULATED-DESIGNED BY: J. PANGBURN
CHECKED BY: M. BROGAN
REVISED BY
DATE REVISED

PATH: V:\Chico-55-0131-SR32 Widening\CADD\Drawing\ FILE NAME: sr32_L1-L4 PLOT DATE: Dec 20, 2011-08:46:05am CAD USER: amillar

LAST REVISION 00-00-00 DATE PLOTTED => $DATE TIME PLOTTED => $TIME

BORDER LAST REVISED 7/2/2010 | USERNAME => $USER DGN FILE => $REQUEST | RELATIVE BORDER SCALE IS IN INCHES 0 1 2 3 | UNIT 0000 | PROJECT NUMBER & PHASE 0300000261

Dist	COUNTY	ROUTE	POST MILES TOTAL PROJECT	SHEET No.	TOTAL SHEETS
03	But	32	10.3/11.3	15	144

R.M.Br 12-22-11
REGISTERED CIVIL ENGINEER DATE

DECEMBER 22, 2011
PLANS APPROVAL DATE

REGISTERED PROFESSIONAL ENGINEER
ROBERT MATTHEW BROGAN
No. 63854
Exp. 9/30/12
CIVIL
STATE OF CALIFORNIA

THE STATE OF CALIFORNIA OR ITS OFFICERS OR AGENTS SHALL NOT BE RESPONSIBLE FOR THE ACCURACY OR COMPLETENESS OF SCANNED COPIES OF THIS PLAN SHEET.

MARK THOMAS & CO., INC.
7300 FOLSOM BLVD STE 203
SACRAMENTO, CA 95826

CITY OF CHICO
CAPITAL PROJECT SERVICES
411 MAIN STREET
CHICO, CA 95927

NOTES:

1. FOR SAWCUT LOCATION INFORMATION NOT SHOWN, SEE CONSTRUCTION DETAIL SHEETS.
2. FOR SOUND WALL LOCATIONS AND DETAILS, SEE SOUND WALL PLAN SHEETS.
3. SEE TREE REMOVAL PLAN SHEETS FOR TREE REMOVAL LOCATIONS.
4. SEE SHEET C-9 FOR LIMITS OF COLD PLANE FOAM ASPHALT REHABILITATION.
5. SEE SHEET X-8 FOR DEMOLITION PAYMENT LIMITS.

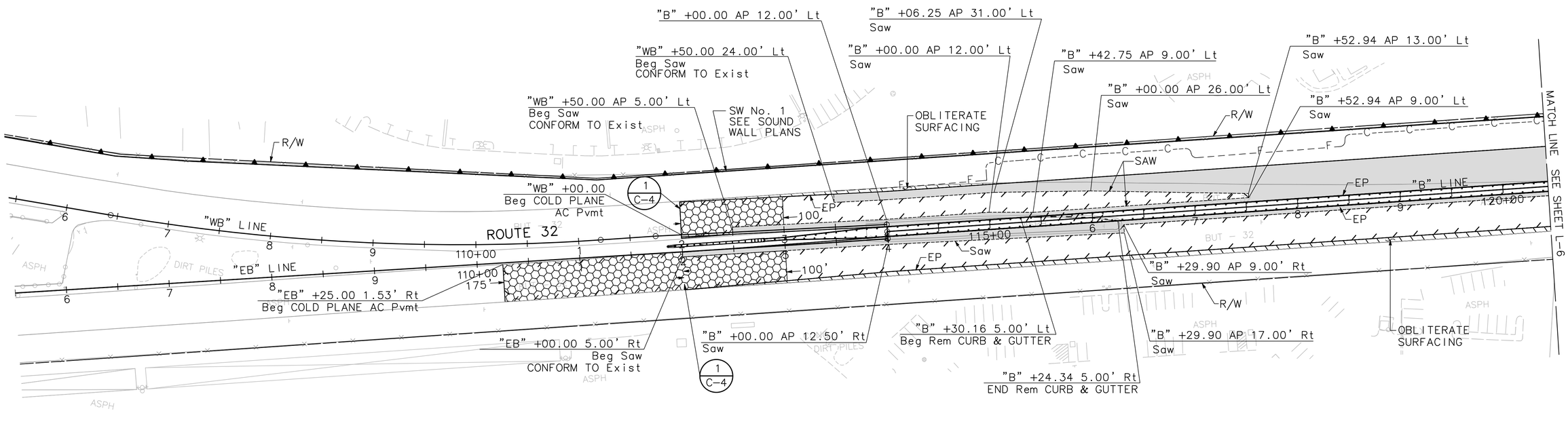

LAYOUT
(DEMOLITION PLAN)

SCALE: 1" = 50'

L-5

THIS PLAN ACCURATE FOR LAYOUT ONLY

REVISED BY	DATE REVISED
J. PANGBURN	M. BROGAN
CALCULATED-DESIGNED BY	CHECKED BY
CONSULTANT FUNCTIONAL SUPERVISOR	ROBERT MATTHEW BROGAN

STATE OF CALIFORNIA - DEPARTMENT OF TRANSPORTATION
Caltrans

PATH: V:\Chico-55-0131-SR32 Widening\CADD\Drawing\ FILE NAME: sr32_L5-L8 PLOT DATE: Dec 20, 2011-08:47:38am CAD USER: amillar

LAST REVISION 00-00-00 | DATE PLOTTED => $DATE | TIME PLOTTED => $TIME

BORDER LAST REVISED 7/2/2010 | USERNAME => $USER | DGN FILE => $REQUEST | RELATIVE BORDER SCALE IS IN INCHES 0 1 2 3 | UNIT 0000 | PROJECT NUMBER & PHASE 0300000261

Dist	COUNTY	ROUTE	POST MILES TOTAL PROJECT	SHEET No.	TOTAL SHEETS
03	But	32	10.3/11.3	16	144

R.M.Br 12-22-11
REGISTERED CIVIL ENGINEER DATE

DECEMBER 22, 2011
PLANS APPROVAL DATE

REGISTERED PROFESSIONAL ENGINEER
ROBERT MATTHEW BROGAN
No. 63854
Exp. 9/30/12
CIVIL
STATE OF CALIFORNIA

THE STATE OF CALIFORNIA OR ITS OFFICERS OR AGENTS SHALL NOT BE RESPONSIBLE FOR THE ACCURACY OR COMPLETENESS OF SCANNED COPIES OF THIS PLAN SHEET.

MARK THOMAS & CO., INC.
7300 FOLSOM BLVD STE 203
SACRAMENTO, CA 95826

CITY OF CHICO
CAPITAL PROJECT SERVICES
411 MAIN STREET
CHICO, CA 95927

NOTES:

1. FOR ADDITIONAL NOTES, LEGEND, AND ABBREVIATIONS, SEE SHEET L-5.

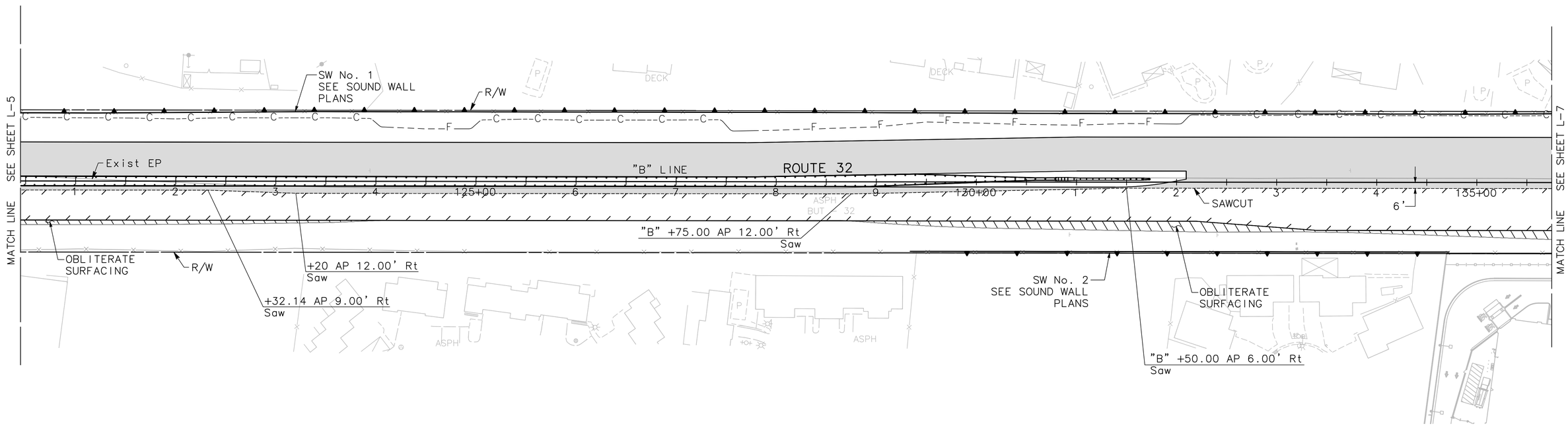

LAYOUT
(DEMOLITION PLAN)

SCALE: 1" = 50'

L-6

THIS PLAN ACCURATE FOR LAYOUT ONLY

STATE OF CALIFORNIA - DEPARTMENT OF TRANSPORTATION
Caltrans

CONSULTANT FUNCTIONAL SUPERVISOR: ROBERT MATTHEW BROGAN

CALCULATED-DESIGNED BY: J. PANGBURN
CHECKED BY: M. BROGAN

REVISED BY
DATE REVISED

PATH: V:\Chico-55-0131-SR32 Widening\CADD\Drawing\ FILE NAME: sr32_L5-L8 PLOT DATE: Dec 20, 2011-08:48:11am CAD USER: amillar

LAST REVISION 00-00-00 DATE PLOTTED => $DATE TIME PLOTTED => $TIME

BORDER LAST REVISED 7/2/2010 | USERNAME => $USER DGN FILE => $REQUEST | RELATIVE BORDER SCALE IS IN INCHES 0 1 2 3 | UNIT 0000 | PROJECT NUMBER & PHASE 0300000261

Dist	COUNTY	ROUTE	POST MILES TOTAL PROJECT	SHEET No.	TOTAL SHEETS
03	But	32	10.3/11.3	17	144

R.M.Br 12-22-11
REGISTERED CIVIL ENGINEER DATE

DECEMBER 22, 2011
PLANS APPROVAL DATE

REGISTERED PROFESSIONAL ENGINEER
ROBERT MATTHEW BROGAN
No. 63854
Exp. 9/30/12
CIVIL
STATE OF CALIFORNIA

THE STATE OF CALIFORNIA OR ITS OFFICERS OR AGENTS SHALL NOT BE RESPONSIBLE FOR THE ACCURACY OR COMPLETENESS OF SCANNED COPIES OF THIS PLAN SHEET.

MARK THOMAS & CO., INC.
7300 FOLSOM BLVD STE 203
SACRAMENTO, CA 95826

CITY OF CHICO
CAPITAL PROJECT SERVICES
411 MAIN STREET
CHICO, CA 95927

NOTES:

1. FOR COMPLETE RIGHT OF WAY AND ACCURATE ACCESS DATA, SEE RIGHT OF WAY RECORD MAPS AT DISTRICT OFFICE.
2. FOR SOUND WALL LOCATIONS AND DETAILS, SEE SOUND WALL PLAN SHEETS.
3. FOR CURB RETURN AND CURB RAMP AND SAWCUT LOCATIONS AND DETAILS, SEE CONSTRUCTION DETAIL SHEETS.
4. FOR ADDITIONAL NOTES, LEGEND, AND ABBREVIATIONS, SEE SHEET L-5.

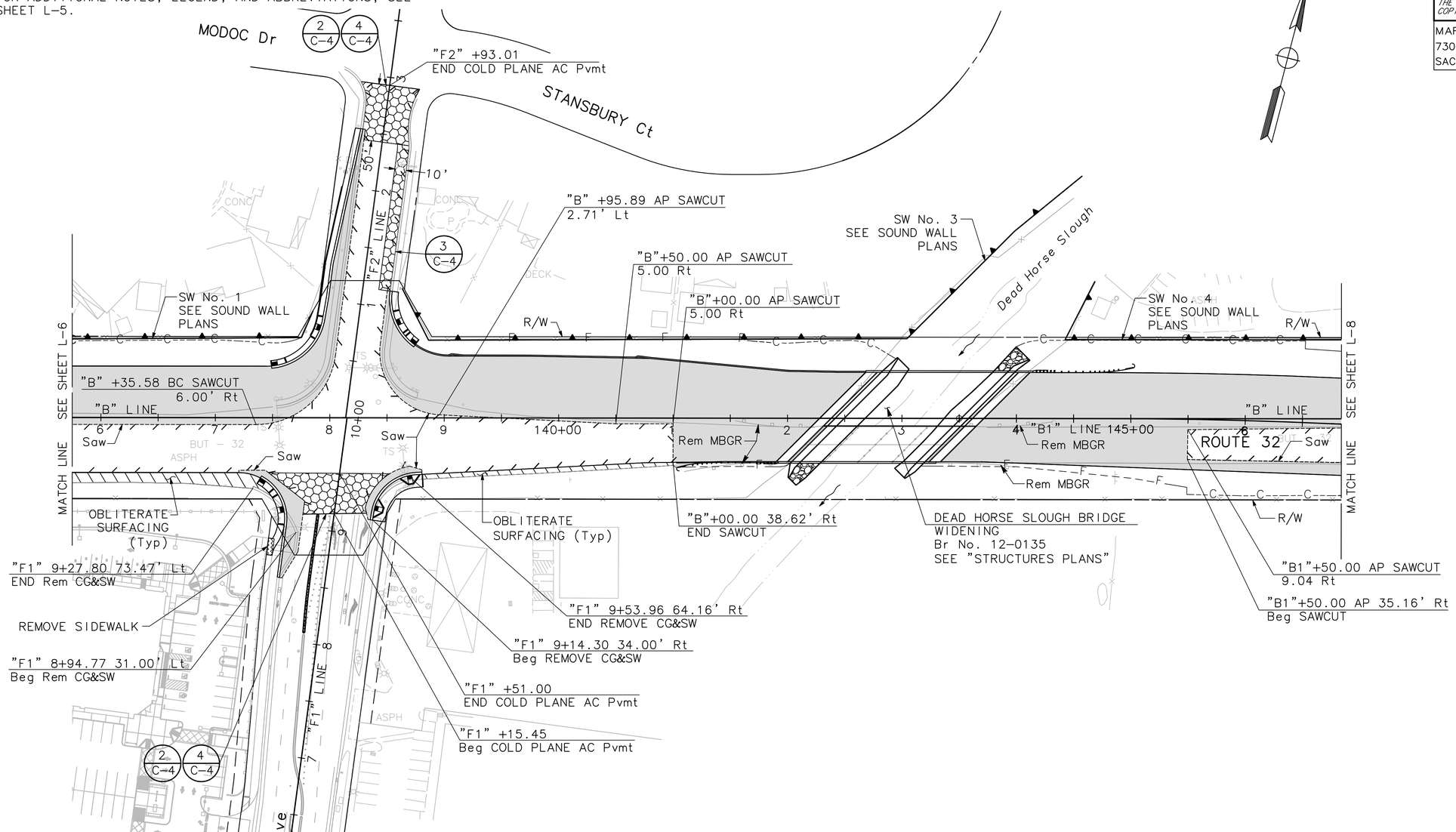

LAYOUT (DEMOLITION PLAN)

SCALE: 1" = 50'

L-7

THIS PLAN ACCURATE FOR LAYOUT ONLY

STATE OF CALIFORNIA - DEPARTMENT OF TRANSPORTATION
Caltrans

CONSULTANT FUNCTIONAL SUPERVISOR: ROBERT MATTHEW BROGAN
CALCULATED-DESIGNED BY: J. PANGBURN
CHECKED BY: M. BROGAN
REVISED BY
DATE REVISED

PATH: V:\Chico-55-0131-SR32 Widening\CADD\Drawing\ FILE NAME: sr32_L5-L8 PLOT DATE: Dec 20, 2011-10:17:27am CAD USER: amillar

LAST REVISION 00-00-00 | DATE PLOTTED => $DATE | TIME PLOTTED => $TIME

BORDER LAST REVISED 7/2/2010 | USERNAME => $USER | DGN FILE => $REQUEST | RELATIVE BORDER SCALE IS IN INCHES 0 1 2 3 | UNIT 0000 | PROJECT NUMBER & PHASE 0300000261

Dist	COUNTY	ROUTE	POST MILES TOTAL PROJECT	SHEET No.	TOTAL SHEETS
03	But	32	10.3/11.3	18	144

R.M.B. 12-22-11
REGISTERED CIVIL ENGINEER DATE

DECEMBER 22, 2011
PLANS APPROVAL DATE

REGISTERED PROFESSIONAL ENGINEER
ROBERT MATTHEW BROGAN
No. 63854
Exp. 9/30/12
CIVIL
STATE OF CALIFORNIA

THE STATE OF CALIFORNIA OR ITS OFFICERS OR AGENTS SHALL NOT BE RESPONSIBLE FOR THE ACCURACY OR COMPLETENESS OF SCANNED COPIES OF THIS PLAN SHEET.

MARK THOMAS & CO., INC.
7300 FOLSOM BLVD STE 203
SACRAMENTO, CA 95826

CITY OF CHICO
CAPITAL PROJECT SERVICES
411 MAIN STREET
CHICO, CA 95927

NOTES:

1. FOR COMPLETE RIGHT OF WAY AND ACCURATE ACCESS DATA, SEE RIGHT OF WAY RECORD MAPS AT DISTRICT OFFICE.
2. FOR CURB RETURN, CURB RAMP, AND SAWCUT LOCATIONS AND DETAILS, SEE CONSTRUCTION DETAIL SHEETS.
3. FOR ADDITIONAL NOTES, LEGEND, AND ABBREVIATIONS SEE SHEET L-5.

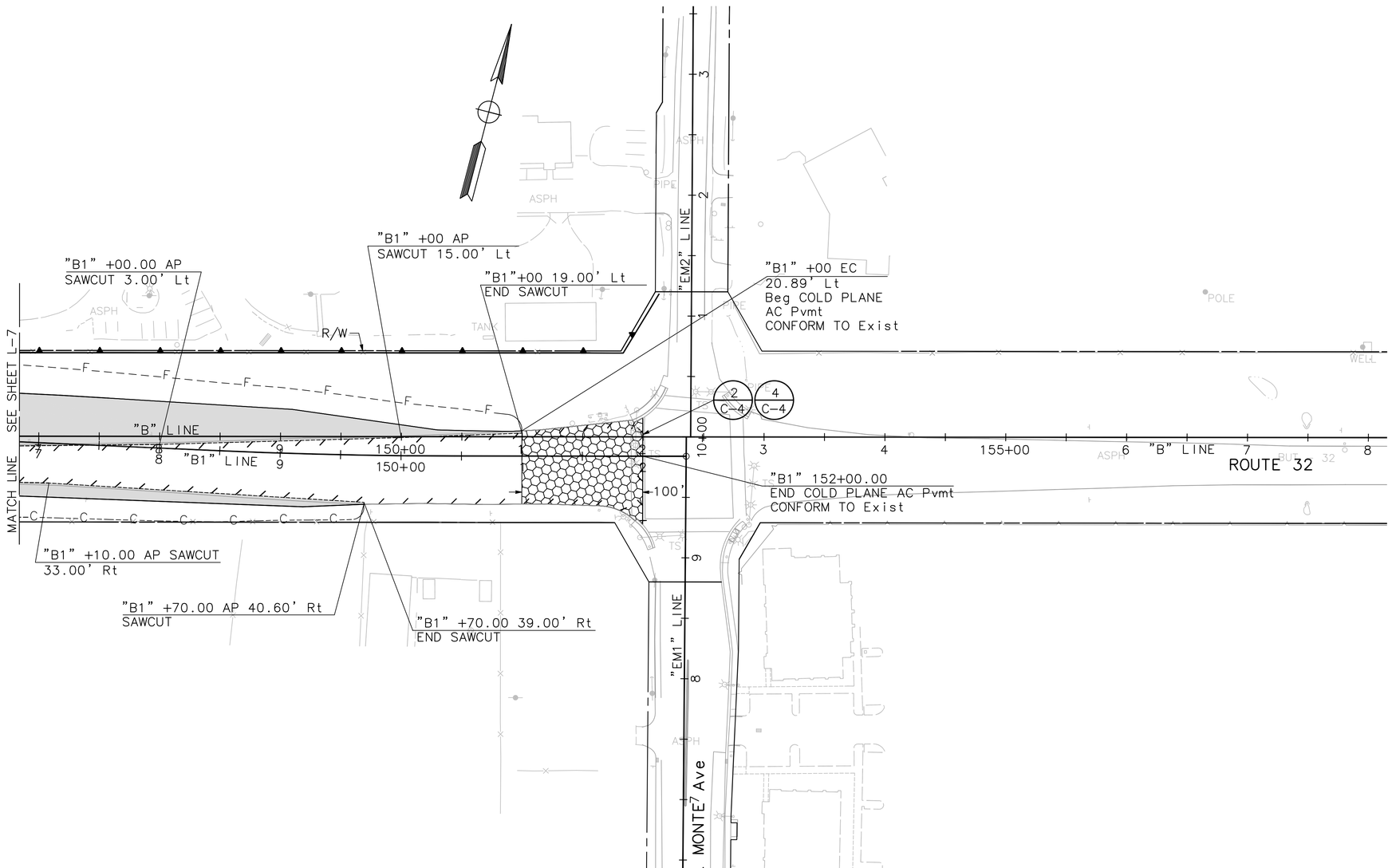

THIS PLAN ACCURATE FOR LAYOUT ONLY

LAYOUT (DEMOLITION PLAN)

SCALE: 1" = 50'

L-8

REVISED BY	DATE REVISED

CALCULATED-DESIGNED BY: J. PANGBURN
CHECKED BY: M. BROGAN
CONSULTANT FUNCTIONAL SUPERVISOR: ROBERT MATTHEW BROGAN

STATE OF CALIFORNIA - DEPARTMENT OF TRANSPORTATION
Caltrans

PATH: V:\Chico-55-0131-SR32 Widening\CADD\Drawing\ FILE NAME: sr32_L5-L8 PLOT DATE: Dec 20, 2011-08:48:43am CAD USER: amillar

LAST REVISION 00-00-00 | DATE PLOTTED => $DATE | TIME PLOTTED => $TIME

Dist	COUNTY	ROUTE	POST MILES TOTAL PROJECT	SHEET No.	TOTAL SHEETS
03	But	32	10.3/11.3	19	144

R. M. Brogan 12-22-11
REGISTERED CIVIL ENGINEER DATE

DECEMBER 22, 2011
PLANS APPROVAL DATE

REGISTERED PROFESSIONAL ENGINEER
ROBERT MATTHEW BROGAN
No. 63854
Exp. 9/30/12
CIVIL
STATE OF CALIFORNIA

THE STATE OF CALIFORNIA OR ITS OFFICERS OR AGENTS SHALL NOT BE RESPONSIBLE FOR THE ACCURACY OR COMPLETENESS OF SCANNED COPIES OF THIS PLAN SHEET.

MARK THOMAS & CO., INC.
7300 FOLSOM BLVD STE 203
SACRAMENTO, CA 95826

CITY OF CHICO
CAPITAL PROJECT SERVICES
411 MAIN STREET
CHICO, CA 95927

NOTE:

1. ELEVATIONS BASED ON NAVD 88.
2. SEE SHEET C-1 FOR PAVEMENT ELEVATIONS ALONG EASTBOUND AND WESTBOUND SR32 PRIOR TO STATION "B" 114+00.

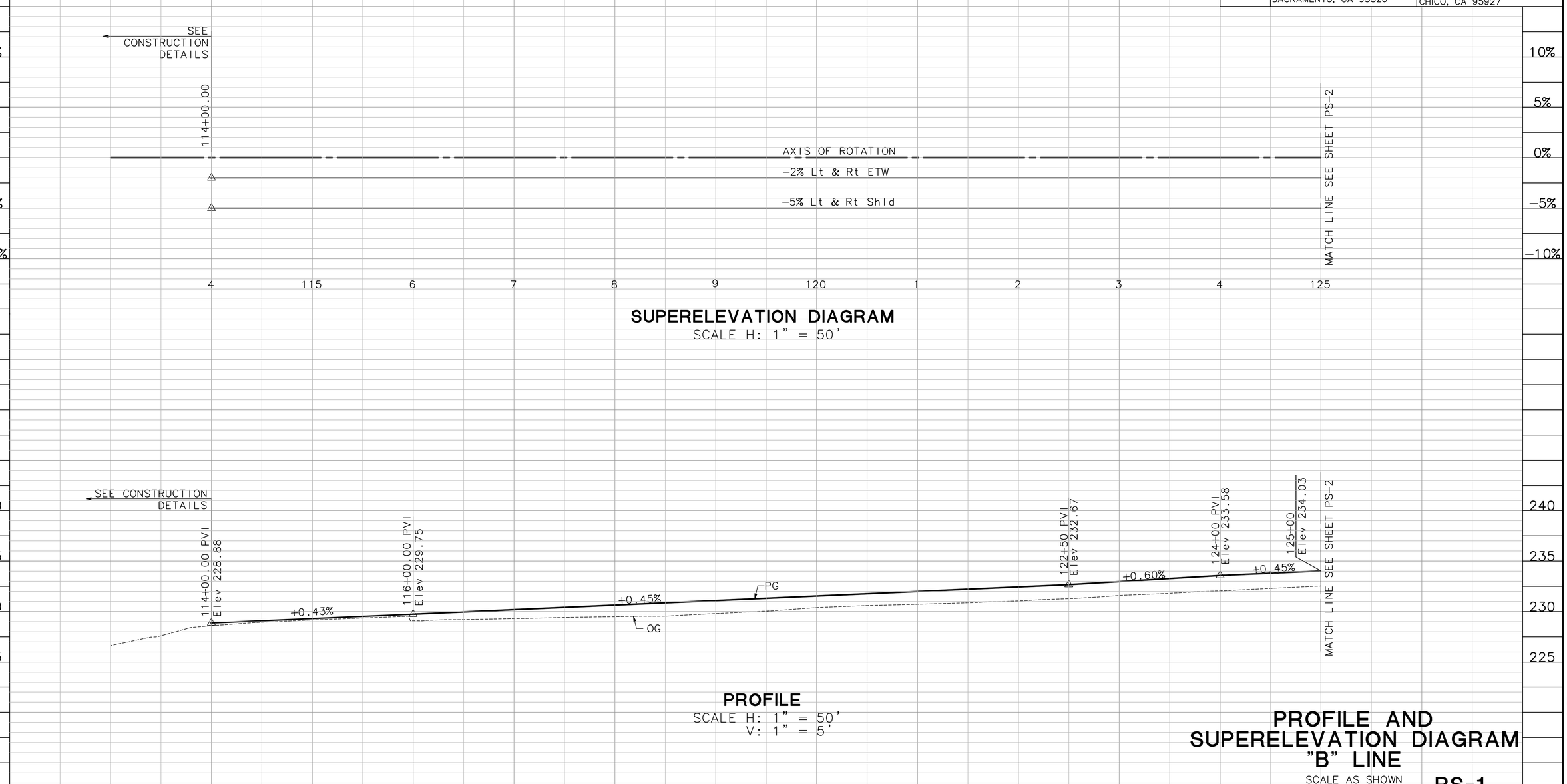

PROFILE AND SUPERELEVATION DIAGRAM "B" LINE

SCALE AS SHOWN

PS-1

STATION	4	115	6	7	8	9	120	1	2	3	4	125	TOTAL
CY Exc													
CY Emb													

REVISED BY | DATE REVISED
J. PANGBURN | M. BROGAN
CALCULATED-DESIGNED BY | CHECKED BY
CONSULTANT FUNCTIONAL SUPERVISOR
ROBERT MATTHEW BROGAN

STATE OF CALIFORNIA - DEPARTMENT OF TRANSPORTATION
Caltrans

PATH: V:\Chico-55-0131-SR32 Widening\CADD\Drawing\ FILE NAME: sr32_PS1-PS4 PLOT DATE: Dec 20, 2011-08:50:14am CAD USER: amillar

LAST REVISION 00-00-00 DATE PLOTTED => $DATE TIME PLOTTED => $TIME

BORDER LAST REVISED 7/2/2010 | USERNAME => $USER DGN FILE => $REQUEST | RELATIVE BORDER SCALE IS IN INCHES 0 1 2 3 | UNIT 0000 | PROJECT NUMBER & PHASE 0300000261

Dist	COUNTY	ROUTE	POST MILES TOTAL PROJECT	SHEET No.	TOTAL SHEETS
03	But	32	10.3/11.3	20	144

R.M.Br 12-22-11
REGISTERED CIVIL ENGINEER DATE

DECEMBER 22, 2011
PLANS APPROVAL DATE

REGISTERED PROFESSIONAL ENGINEER
ROBERT MATTHEW BROGAN
No. 63854
Exp. 9/30/12
CIVIL
STATE OF CALIFORNIA

THE STATE OF CALIFORNIA OR ITS OFFICERS OR AGENTS SHALL NOT BE RESPONSIBLE FOR THE ACCURACY OR COMPLETENESS OF SCANNED COPIES OF THIS PLAN SHEET.

MARK THOMAS & CO., INC.
7300 FOLSOM BLVD STE 203
SACRAMENTO, CA 95826

CITY OF CHICO
CAPITAL PROJECT SERVICES
411 MAIN STREET
CHICO, CA 95927

NOTE:

1. ELEVATIONS BASED ON NAVD 88.

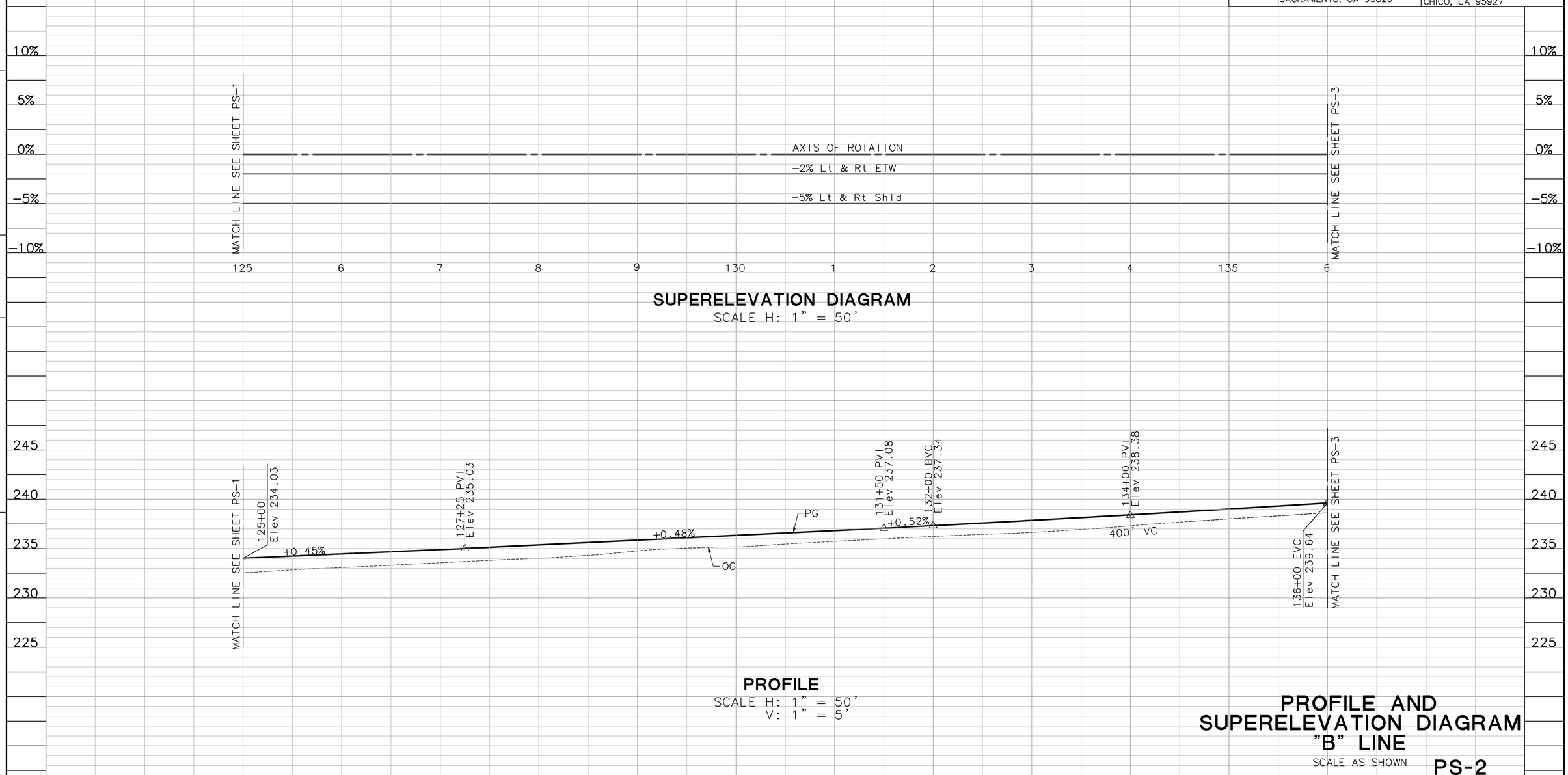

SUPERELEVATION DIAGRAM
SCALE H: 1" = 50'

PROFILE
SCALE H: 1" = 50'
V: 1" = 5'

PROFILE AND SUPERELEVATION DIAGRAM "B" LINE

SCALE AS SHOWN

PS-2

STATION	125	6	7	8	9	130	1	2	3	4	135	6	TOTAL
CY Exc													
CY Emb													

STATE OF CALIFORNIA - DEPARTMENT OF TRANSPORTATION
Caltrans

CONSULTANT FUNCTIONAL SUPERVISOR: ROBERT MATTHEW BROGAN

CALCULATED-DESIGNED BY: J. PANGBURN
CHECKED BY: M. BROGAN

REVISED BY
DATE REVISED

PATH: V:\Chico-55-0131-SR32 Widening\CADD\Drawing\ FILE NAME: sr32_PS1-PS4 PLOT DATE: Dec 20, 2011-08:50:41am CAD USER: amillar

LAST REVISION 00-00-00
DATE PLOTTED => $DATE
TIME PLOTTED => $TIME

BORDER LAST REVISED 7/2/2010
USERNAME => $USER
DGN FILE => $REQUEST
RELATIVE BORDER SCALE IS IN INCHES 0 1 2 3
UNIT 0000
PROJECT NUMBER & PHASE 0300000261

Dist	COUNTY	ROUTE	POST MILES TOTAL PROJECT	SHEET No.	TOTAL SHEETS
03	But	32	10.3/11.3	21	144

R. M. Brogan 12-22-11
REGISTERED CIVIL ENGINEER DATE

DECEMBER 22, 2011
PLANS APPROVAL DATE

REGISTERED PROFESSIONAL ENGINEER
ROBERT MATTHEW BROGAN
No. 63854
Exp. 9/30/12
CIVIL
STATE OF CALIFORNIA

THE STATE OF CALIFORNIA OR ITS OFFICERS OR AGENTS SHALL NOT BE RESPONSIBLE FOR THE ACCURACY OR COMPLETENESS OF SCANNED COPIES OF THIS PLAN SHEET.

MARK THOMAS & CO., INC.
7300 FOLSOM BLVD STE 203
SACRAMENTO, CA 95826

CITY OF CHICO
CAPITAL PROJECT SERVICES
411 MAIN STREET
CHICO, CA 95927

NOTE:

1. ELEVATIONS BASED ON NAVD 88.

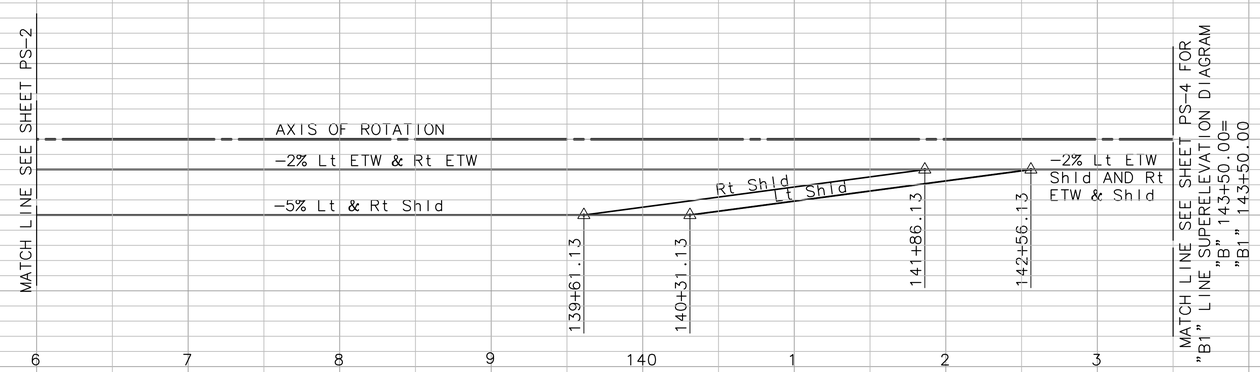

SUPERELEVATION DIAGRAM

SCALE H: 1" = 50'

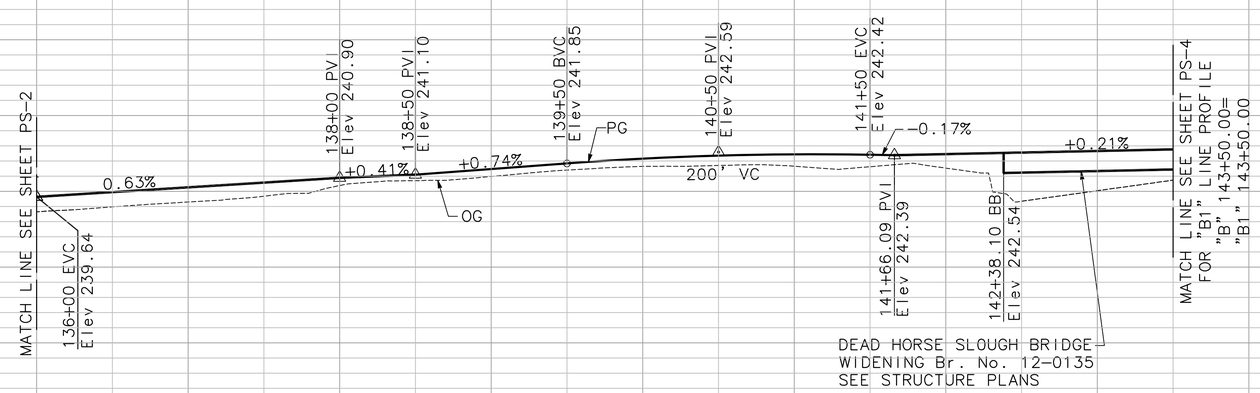

PROFILE

SCALE H: 1" = 50'
V: 1" = 5'

PROFILE AND SUPERELEVATION DIAGRAM "B" LINE

SCALE AS SHOWN

PS-3

STATION	6	7	8	9	140	1	2	3	4	TOTAL
CY Exc										
CY Emb										

REVISED BY | DATE REVISED
J. PANGBURN | M. BROGAN
CALCULATED-DESIGNED BY | CHECKED BY
CONSULTANT FUNCTIONAL SUPERVISOR: ROBERT MATTHEW BROGAN

STATE OF CALIFORNIA - DEPARTMENT OF TRANSPORTATION
Caltrans

PATH: V:\Chico-55-0131-SR32 Widening\CADD\Drawing\ FILE NAME: sr32_PS1-PS4 PLOT DATE: Dec 20, 2011-08:51:14am CAD USER: amillar

LAST REVISION | DATE PLOTTED => $DATE | TIME PLOTTED => $TIME
00-00-00

BORDER LAST REVISED 7/2/2010 | USERNAME => $USER | DGN FILE => $REQUEST | RELATIVE BORDER SCALE IS IN INCHES 0 1 2 3 | UNIT 0000 | PROJECT NUMBER & PHASE 0300000261

Dist	COUNTY	ROUTE	POST MILES TOTAL PROJECT	SHEET No.	TOTAL SHEETS
03	But	32	10.3/11.3	22	144

R.M. Brogan 12-22-11
REGISTERED CIVIL ENGINEER DATE

DECEMBER 22, 2011
PLANS APPROVAL DATE

REGISTERED PROFESSIONAL ENGINEER ROBERT MATTHEW BROGAN No. 63854 Exp. 9/30/12 CIVIL STATE OF CALIFORNIA

THE STATE OF CALIFORNIA OR ITS OFFICERS OR AGENTS SHALL NOT BE RESPONSIBLE FOR THE ACCURACY OR COMPLETENESS OF SCANNED COPIES OF THIS PLAN SHEET.

MARK THOMAS & CO., INC.
7300 FOLSOM BLVD STE 203
SACRAMENTO, CA 95826

CITY OF CHICO
CAPITAL PROJECT SERVICES
411 MAIN STREET
CHICO, CA 95927

NOTE:

1. ELEVATIONS BASED ON NAVD 88.

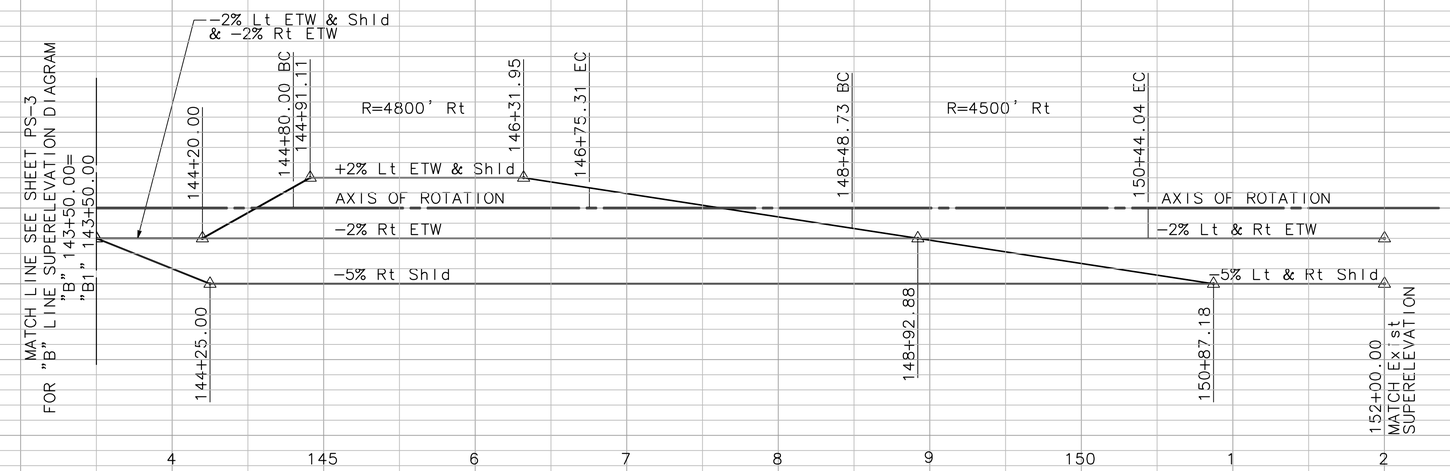

SUPERELEVATION DIAGRAM

SCALE H: 1" = 50'

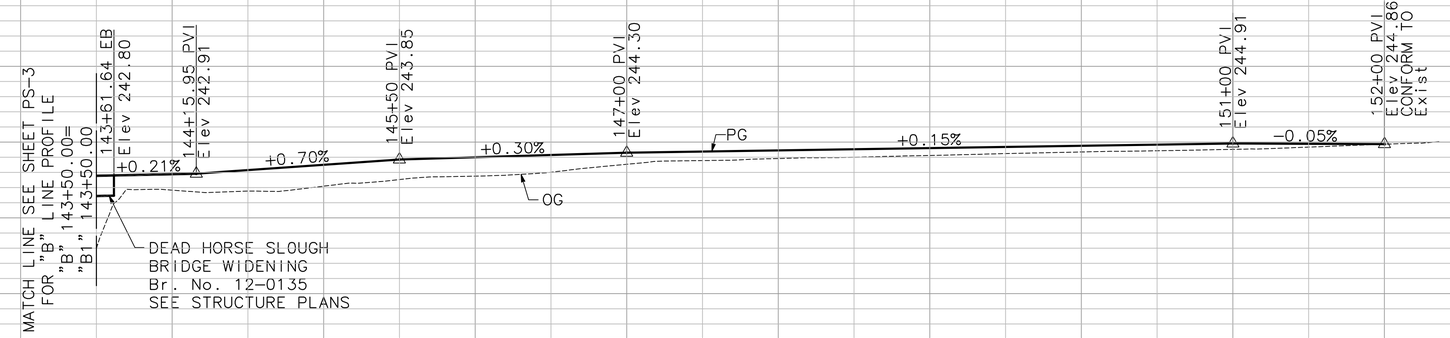

PROFILE

SCALE H: 1" = 50'
V: 1" = 5'

PROFILE AND SUPERELEVATION DIAGRAM "B1" LINE

SCALE AS SHOWN

PS-4

STATION	4	145	6	7	8	9	150	1	2	TOTAL
CY Exc										
CY Emb										

STATE OF CALIFORNIA - DEPARTMENT OF TRANSPORTATION
Caltrans

CONSULTANT FUNCTIONAL SUPERVISOR: ROBERT MATTHEW BROGAN
CALCULATED-DESIGNED BY: J. PANGBURN
CHECKED BY: M. BROGAN
REVISED BY
DATE REVISED

LAST REVISION 00-00-00
DATE PLOTTED => $DATE
TIME PLOTTED => $TIME

PATH: V:\Chico-55-0131-SR32 Widening\CADD\Drawing\ FILE NAME: sr32_PS1-PS4 PLOT DATE: Dec 20, 2011-08:51:42am CAD USER: amillar

BORDER LAST REVISED 7/2/2010 | USERNAME => $USER | DGN FILE => $REQUEST | RELATIVE BORDER SCALE IS IN INCHES 0 1 2 3 | UNIT 0000 | PROJECT NUMBER & PHASE 0300000261

Dist	COUNTY	ROUTE	POST MILES TOTAL PROJECT	SHEET No.	TOTAL SHEETS
03	But	32	10.3/11.3	23	144

R.M. Brogan 12-22-11
REGISTERED CIVIL ENGINEER DATE

DECEMBER 22, 2011
PLANS APPROVAL DATE

REGISTERED PROFESSIONAL ENGINEER ROBERT MATTHEW BROGAN No. 63854 Exp. 9/30/12 CIVIL STATE OF CALIFORNIA

THE STATE OF CALIFORNIA OR ITS OFFICERS OR AGENTS SHALL NOT BE RESPONSIBLE FOR THE ACCURACY OR COMPLETENESS OF SCANNED COPIES OF THIS PLAN SHEET.

MARK THOMAS & CO., INC.
7300 FOLSOM BLVD STE 203
SACRAMENTO, CA 95826

CITY OF CHICO
CAPITAL PROJECT SERVICES
411 MAIN STREET
CHICO, CA 95927

NOTE:

1. SAWCUT ELEVATIONS SHOWN ARE TO FINISHED GRADE AT TOP OF DENSE GRADED ASPHALT CONCRETE.
2. EXISTING ELEVATIONS SHOWN AS (XXX.XX).

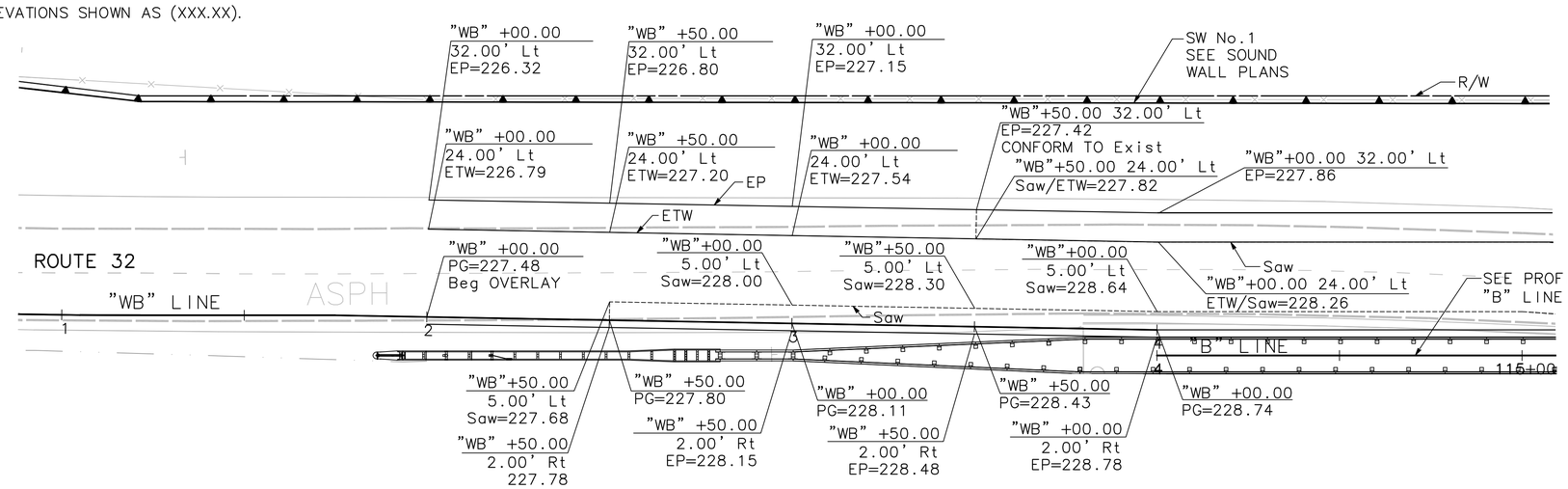

LEGEND – CONSTRUCTION DETAILS ONLY

MINOR Conc (TEXTURED PAVING)

"WB" LINE WIDENING & PROFILE TRANSITION DETAIL

"WB"112+50 TO 114+00

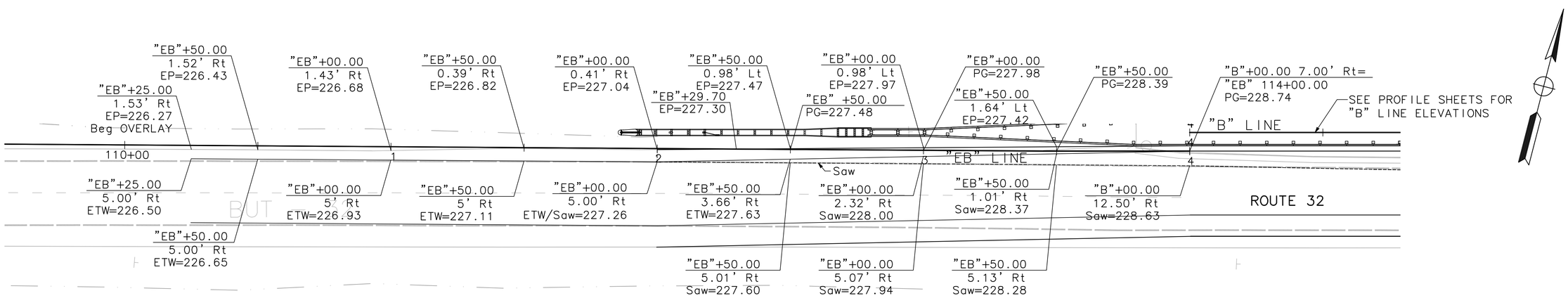

"EB" LINE WIDENING DETAIL

"EB" 110+25 TO "B" 114+00

CONSTRUCTION DETAILS

SCALE: 1"=20'

C-1

STATE OF CALIFORNIA – DEPARTMENT OF TRANSPORTATION

Caltrans

CONSULTANT FUNCTIONAL SUPERVISOR: ROBERT MATTHEW BROGAN

CALCULATED-DESIGNED BY: J. PANGBURN

CHECKED BY: M. BROGAN

REVISED BY

DATE REVISED

PATH: V:\Chico-55-0131-SR32 Widening\CADD\Drawing\ FILE NAME: sr32_C1-C4 PLOT DATE: Dec 20, 2011-08:54:33am CAD USER: amillar

LAST REVISION 00-00-00 DATE PLOTTED => $DATE TIME PLOTTED => $TIME

Dist	COUNTY	ROUTE	POST MILES TOTAL PROJECT	SHEET No.	TOTAL SHEETS
03	But	32	10.3/11.3	24	144

R.M. Brogan 12-22-11
REGISTERED CIVIL ENGINEER DATE

DECEMBER 22, 2011
PLANS APPROVAL DATE

REGISTERED PROFESSIONAL ENGINEER ROBERT MATTHEW BROGAN No. 63854 Exp. 9/30/12 CIVIL STATE OF CALIFORNIA

THE STATE OF CALIFORNIA OR ITS OFFICERS OR AGENTS SHALL NOT BE RESPONSIBLE FOR THE ACCURACY OR COMPLETENESS OF SCANNED COPIES OF THIS PLAN SHEET.

MARK THOMAS & CO., INC.
7300 FOLSOM BLVD STE 203
SACRAMENTO, CA 95826

CITY OF CHICO
CAPITAL PROJECT SERVICES
411 MAIN STREET
CHICO, CA 95927

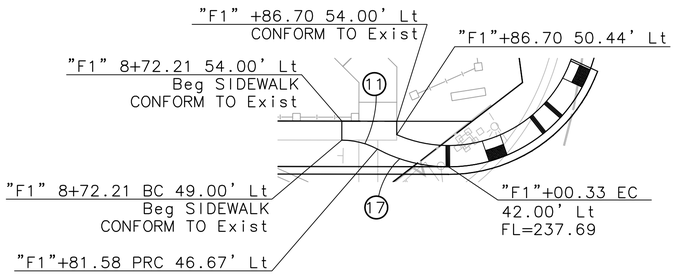

DETAIL "A"

CURVE TABLE				
CURVE	RADIUS	△	TANGENT	LENGTH
11	20.00'	27°57'10"	4.98'	9.76'
12	40.00'	97°34'04"	45.67'	68.12'
13	600.00'	02°45'34"	14.45'	28.90'
14	40.00'	79°22'43"	33.20'	55.42'
15	50.00'	80°16'51"	42.16'	70.06'
16	50.00'	97°32'36"	57.06'	85.12'
17	40.00'	27°57'10"	9.96'	19.51'

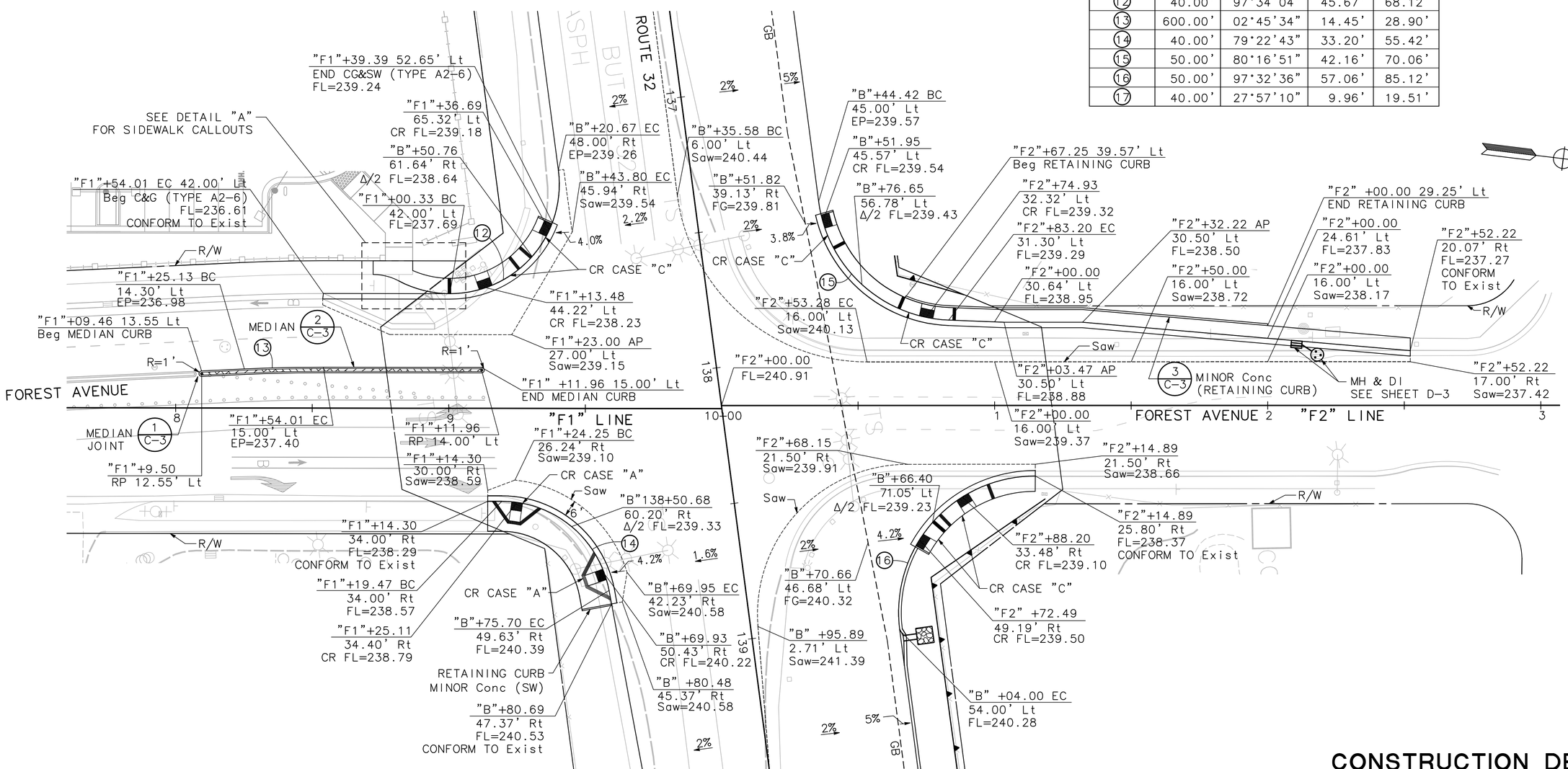

FOREST AVENUE DETAIL

CONSTRUCTION DETAILS

SCALE: 1"=20'

C-2

STATE OF CALIFORNIA – DEPARTMENT OF TRANSPORTATION
Caltrans

CONSULTANT FUNCTIONAL SUPERVISOR: ROBERT MATTHEW BROGAN
CALCULATED-DESIGNED BY: J. PANGBURN
CHECKED BY: M. BROGAN
REVISED BY
DATE REVISED

PLOT DATE: Dec 20, 2011-10:23:32am
FILE NAME: sr32_c4-C4
CAD USER: amillar
PATH: V:\Chico-55-0131-SR32 Widening\CADD\Drawing\

LAST REVISION 00-00-00
DATE PLOTTED => $DATE
TIME PLOTTED => $TIME

Dist	COUNTY	ROUTE	POST MILES TOTAL PROJECT	SHEET No.	TOTAL SHEETS
03	But	32	10.3/11.3	25	144

R.M. Brogan 12-22-11
REGISTERED CIVIL ENGINEER DATE

DECEMBER 22, 2011
PLANS APPROVAL DATE

REGISTERED PROFESSIONAL ENGINEER ROBERT MATTHEW BROGAN No. 63854 Exp. 9/30/12 CIVIL STATE OF CALIFORNIA

THE STATE OF CALIFORNIA OR ITS OFFICERS OR AGENTS SHALL NOT BE RESPONSIBLE FOR THE ACCURACY OR COMPLETENESS OF SCANNED COPIES OF THIS PLAN SHEET.

MARK THOMAS & CO., INC.
7300 FOLSOM BLVD STE 203
SACRAMENTO, CA 95826

CITY OF CHICO
CAPITAL PROJECT SERVICES
411 MAIN STREET
CHICO, CA 95927

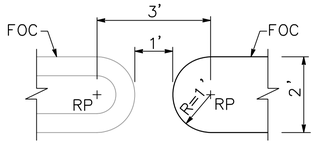

1 / C-3 **MEDIAN JOINT DETAIL**
NO SCALE

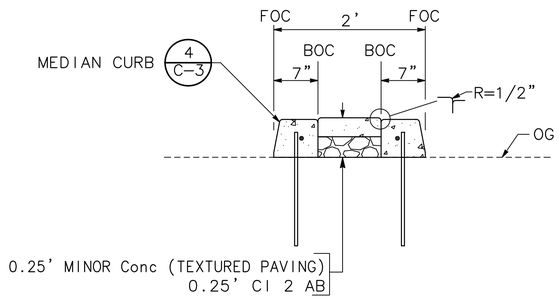

2 / C-3 **MEDIAN DETAIL**
NO SCALE

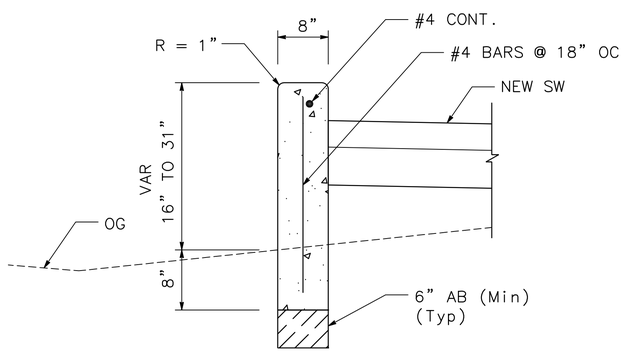

3 / C-3 **MINOR CONCRETE (RETAINING CURB)**
NO SCALE

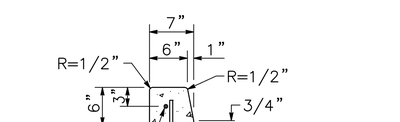

4 / C-3 **MEDIAN CURB**
NO SCALE

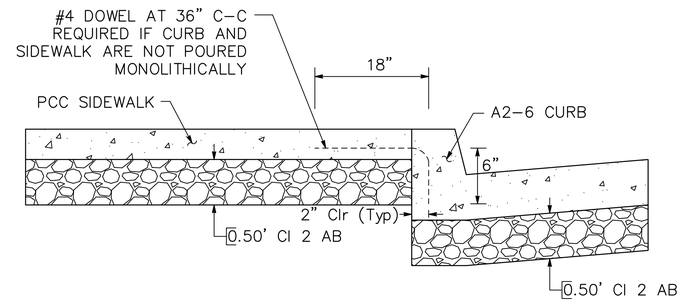

MINOR CONCRETE (SIDEWALK)-WITHIN ACCESS CONTROL

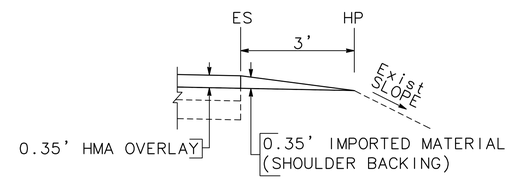

SHOULDER BACKING PLACEMENT DETAIL (0.35' HMA OVERLAY)

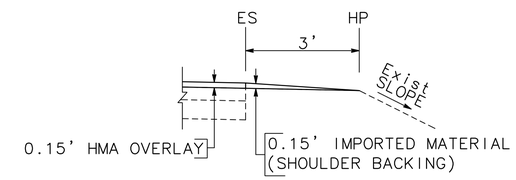

SHOULDER BACKING PLACEMENT DETAIL (0.15' HMA OVERLAY)

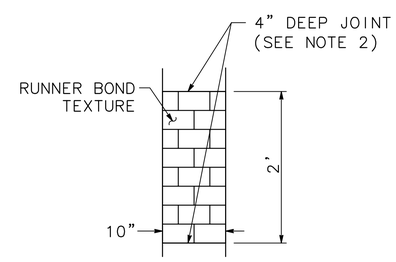

MINOR CONCRETE (TEXTURED PAVING) DETAIL

NOTE:

1. COLORED CONCRETE TO INCLUDE TAN COLOR HARDENER AND BRICK RED RELEASE AGENT.
2. JOINTS SHALL BE PLACED IN THE LONGITUDINAL DIRECTION EVERY 2', AND ALONG OUTER EDGES OF TEXTURED PAVING.

CONSTRUCTION DETAILS
NO SCALE

C-3

STATE OF CALIFORNIA - DEPARTMENT OF TRANSPORTATION
Caltrans
CONSULTANT FUNCTIONAL SUPERVISOR: ROBERT MATTHEW BROGAN
CALCULATED-DESIGNED BY: J. PANGBURN
CHECKED BY: M. BROGAN
REVISED BY
DATE REVISED

LAST REVISION 00-00-00
DATE PLOTTED => $DATE
TIME PLOTTED => $TIME

PATH: V:\Chico-55-0131-SR32 Widening\CADD\Drawing\ FILE NAME: sr32_C1-C4 PLOT DATE: Dec 20, 2011-08:55:34am CAD USER: amillar

BORDER LAST REVISED 7/2/2010 | USERNAME => $USER DGN FILE => $REQUEST | RELATIVE BORDER SCALE IS IN INCHES 0 1 2 3 | UNIT 0000 | PROJECT NUMBER & PHASE 0300000261

Dist	COUNTY	ROUTE	POST MILES TOTAL PROJECT	SHEET No.	TOTAL SHEETS
03	But	32	10.3/11.3	26	144

R.M.Bro 12-22-11
REGISTERED CIVIL ENGINEER DATE

DECEMBER 22, 2011
PLANS APPROVAL DATE

REGISTERED PROFESSIONAL ENGINEER ROBERT MATTHEW BROGAN No. 63854 Exp. 9/30/12 CIVIL STATE OF CALIFORNIA

THE STATE OF CALIFORNIA OR ITS OFFICERS OR AGENTS SHALL NOT BE RESPONSIBLE FOR THE ACCURACY OR COMPLETENESS OF SCANNED COPIES OF THIS PLAN SHEET.

MARK THOMAS & CO., INC.
7300 FOLSOM BLVD STE 203
SACRAMENTO, CA 95826

CITY OF CHICO
CAPITAL PROJECT SERVICES
411 MAIN STREET
CHICO, CA 95927

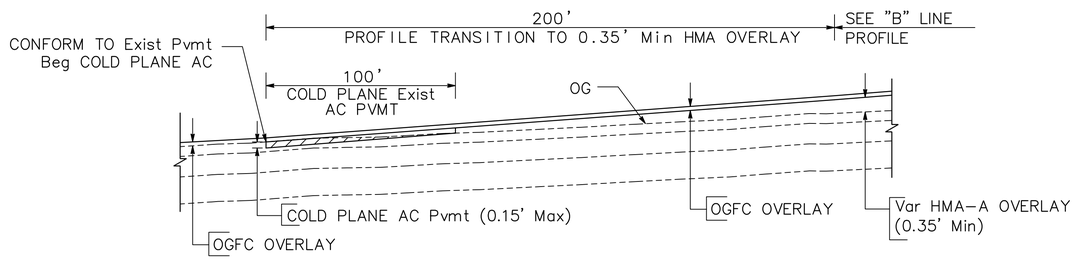

1 C-4 **LONGITUDINAL PROFILE DETAIL**
ELEVATION VIEW
NO SCALE
Sta "WB"112+00 TO 114+00 & "EB" 112+00 TO 114+00

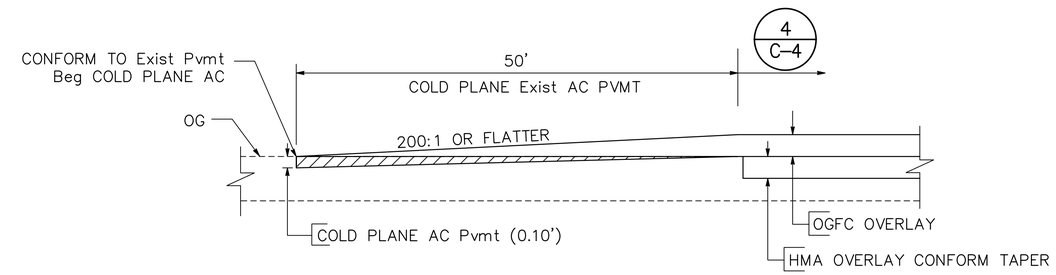

2 C-4 **TRANSVERSE OGFC TAPER TO EXISTING HMA PAVEMENT**
ELEVATION VIEW

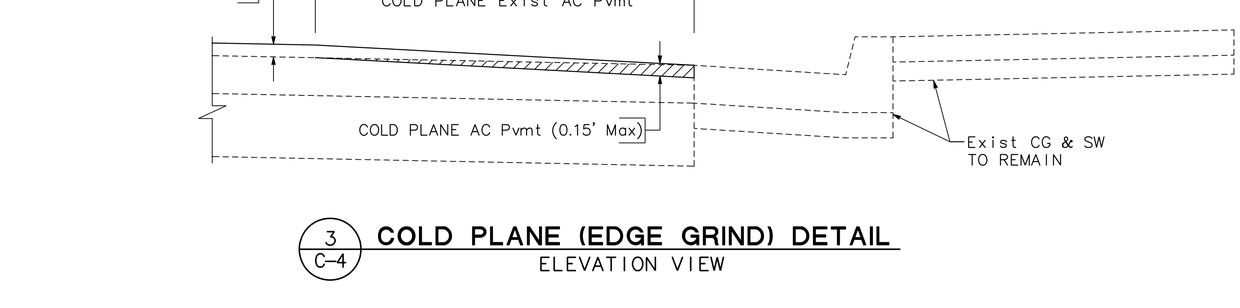

3 C-4 **COLD PLANE (EDGE GRIND) DETAIL**
ELEVATION VIEW

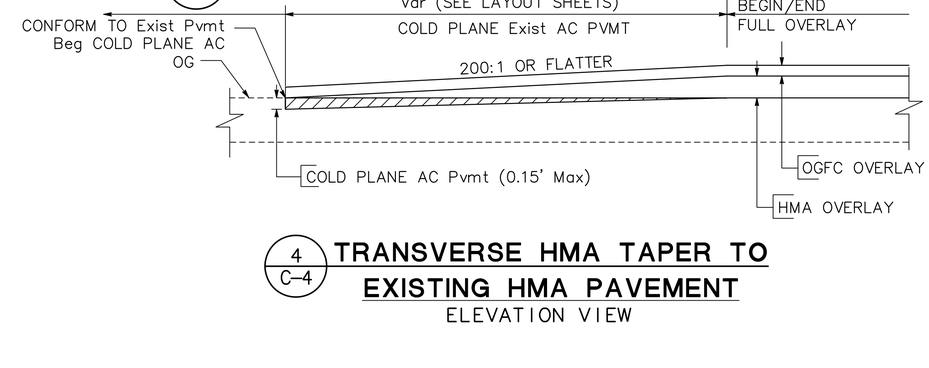

4 C-4 **TRANSVERSE HMA TAPER TO EXISTING HMA PAVEMENT**
ELEVATION VIEW

CONSTRUCTION DETAILS
NO SCALE

C-4

STATE OF CALIFORNIA - DEPARTMENT OF TRANSPORTATION
Caltrans
CONSULTANT FUNCTIONAL SUPERVISOR: ROBERT MATTHEW BROGAN
CALCULATED-DESIGNED BY: J. PANGBURN
CHECKED BY: M. BROGAN
REVISED BY
DATE REVISED

PATH: V:\Chico-55-0131-SR32 Widening\CADD\Drawing\ FILE NAME: sr32_C1-C4 PLOT DATE: Dec 20, 2011-08:55:53am CAD USER: amillar

LAST REVISION 00-00-00 DATE PLOTTED => $DATE TIME PLOTTED => $TIME

Dist	COUNTY	ROUTE	POST MILES TOTAL PROJECT	SHEET No.	TOTAL SHEETS
03	But	32	10.3/11.3	27	144

R.M.Br 12-22-11
REGISTERED CIVIL ENGINEER DATE

DECEMBER 22, 2011
PLANS APPROVAL DATE

REGISTERED PROFESSIONAL ENGINEER ROBERT MATTHEW BROGAN No. 63854 Exp. 9/30/12 CIVIL STATE OF CALIFORNIA

THE STATE OF CALIFORNIA OR ITS OFFICERS OR AGENTS SHALL NOT BE RESPONSIBLE FOR THE ACCURACY OR COMPLETENESS OF SCANNED COPIES OF THIS PLAN SHEET.

MARK THOMAS & CO., INC.
7300 FOLSOM BLVD STE 203
SACRAMENTO, CA 95826

CITY OF CHICO
CAPITAL PROJECT SERVICES
411 MAIN STREET
CHICO, CA 95927

NOTES:

1. SEE LAYOUT SHEETS FOR EXACT LIMITS OF SBTG (SINGLE SIDED), SBTG (DOUBLE SIDED), AND ANCHOR TERMINALS.
2. WHERE DIMENSION OF PAVED SHOULDER TO POST EXCEEDS 10 3/4", INCREASE DIMENSION FROM BASE OF POST TO EDGE OF VEGETATION CONTROL TO A MAXIMUM OF 2'.

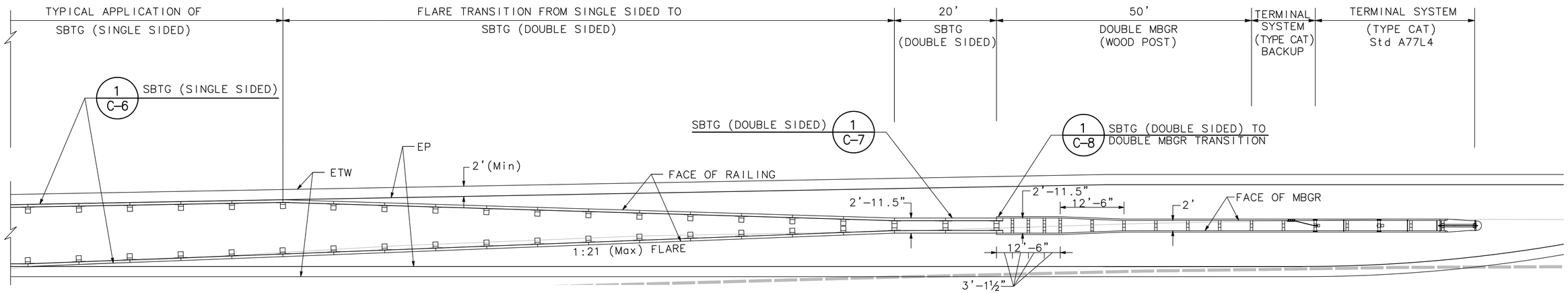

1 C-5 TYPICAL STEEL-BACKED TIMBER GUARDRAIL LAYOUT

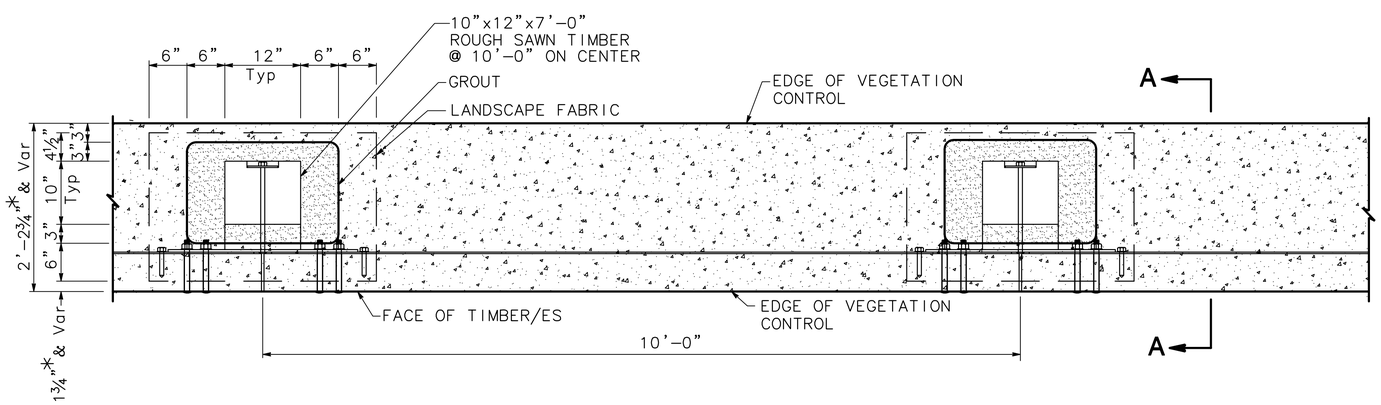

VEGETATION CONTROL DETAIL
STEEL-BACKED TIMBER GUARDRAIL (MEDIAN)

* SEE NOTE 2

FOR MBGR VEGETATION CONTROL, SEE CALTRANS STANDARD PLANS

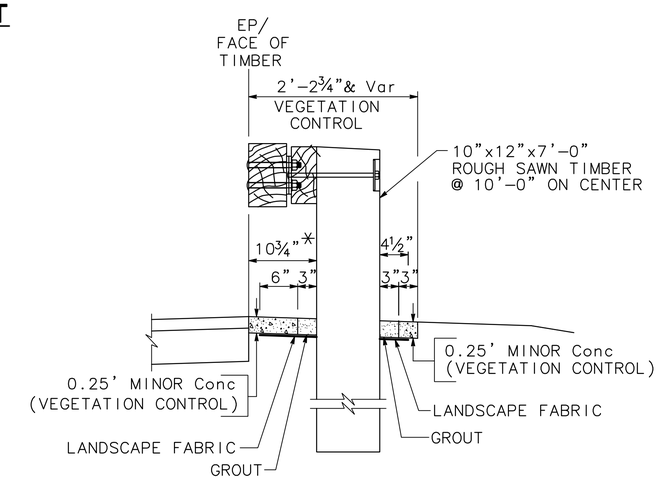

SECTION A-A

* SEE NOTE 2

CONSTRUCTION DETAILS

NO SCALE

C-5

REVISED BY | DATE REVISED
J. PANGBURN | M. BROGAN
CALCULATED-DESIGNED BY | CHECKED BY
CONSULTANT FUNCTIONAL SUPERVISOR | ROBERT MATTHEW BROGAN

STATE OF CALIFORNIA - DEPARTMENT OF TRANSPORTATION
Caltrans

PATH: V:\Chico-55-0131-SR32 Widening\CADD\Drawing\ FILE NAME: sr32_C5-C8 PLOT DATE: Dec 20, 2011-08:57:09am CAD USER: amillar

LAST REVISION 00-00-00 | DATE PLOTTED => $DATE | TIME PLOTTED => $TIME

BORDER LAST REVISED 7/2/2010 | USERNAME => $USER | DGN FILE => $REQUEST | RELATIVE BORDER SCALE IS IN INCHES 0 1 2 3 | UNIT 0000 | PROJECT NUMBER & PHASE 0300000261

Dist	COUNTY	ROUTE	POST MILES TOTAL PROJECT	SHEET No.	TOTAL SHEETS
03	But	32	10.3/11.3	28	144

R. M. Brogan 12-22-11
REGISTERED CIVIL ENGINEER DATE

DECEMBER 22, 2011
PLANS APPROVAL DATE

REGISTERED PROFESSIONAL ENGINEER ROBERT MATTHEW BROGAN No. 63854 Exp. 9/30/12 CIVIL STATE OF CALIFORNIA

THE STATE OF CALIFORNIA OR ITS OFFICERS OR AGENTS SHALL NOT BE RESPONSIBLE FOR THE ACCURACY OR COMPLETENESS OF SCANNED COPIES OF THIS PLAN SHEET.

MARK THOMAS & CO., INC.
7300 FOLSOM BLVD STE 203
SACRAMENTO, CA 95826

CITY OF CHICO
CAPITAL PROJECT SERVICES
411 MAIN STREET
CHICO, CA 95927

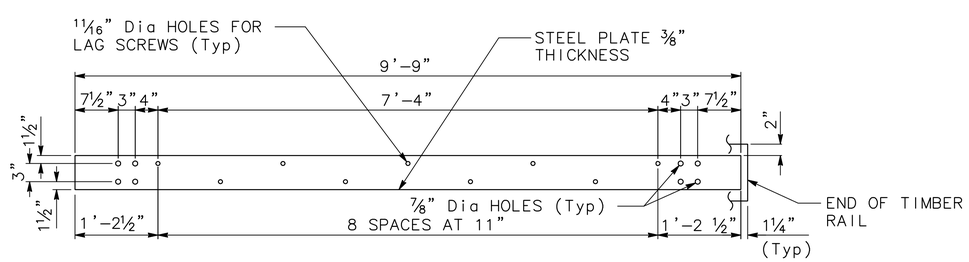

DETAIL 'B' - STEEL RAIL

DETAIL 'D' - PLATE WASHER

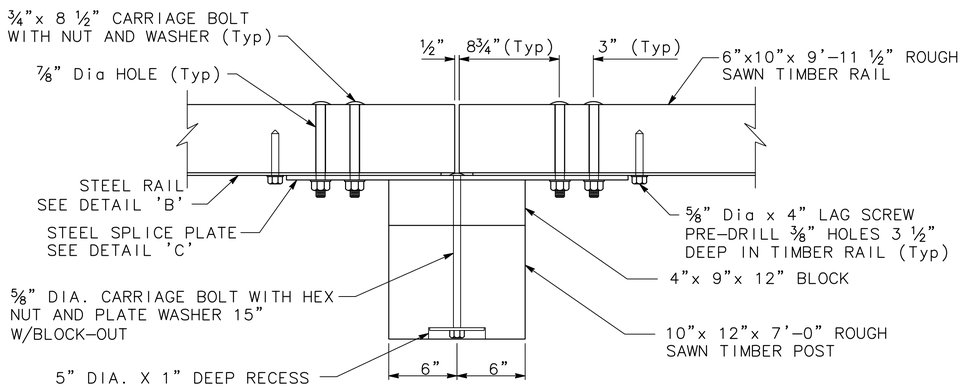

PLAN

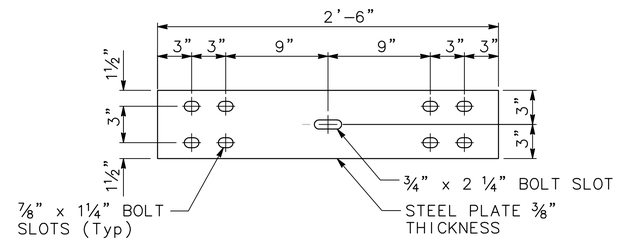

DETAIL 'C' - STEEL SPLICE PLATE

NOTES:

1. USE WEATHERING STEEL FOR ALL STRUCTURAL STEEL AND FASTENER HARDWARE AS SPECIFIED.
2. USE A CONCRETE ANCHOR WHEN STANDARD EMBEDMENT LENGTH CANNOT BE ACHIEVED. SEE DETAIL 'E'.
3. A 24" DIAMETER ROUND ANCHOR MAY BE USED INSTEAD OF THE SQUARE ANCHOR SHOWN. A REDUCED SIZE IS ACCEPTABLE IN SOLID ROCK.
4. SEE SHEET C-5 FOR VEGETATION CONTROL DETAILS.

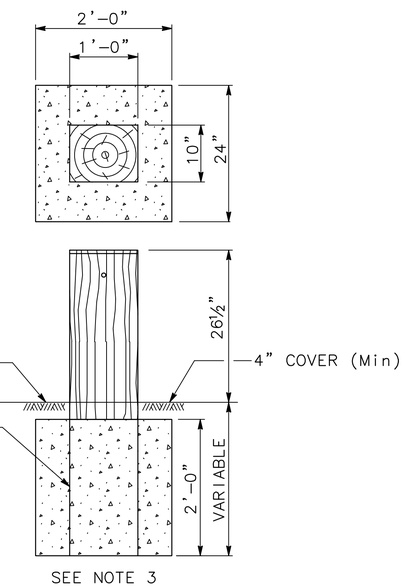

DETAIL 'E' - CONCRETE ANCHOR FOR SHORT GUARDRAIL POST

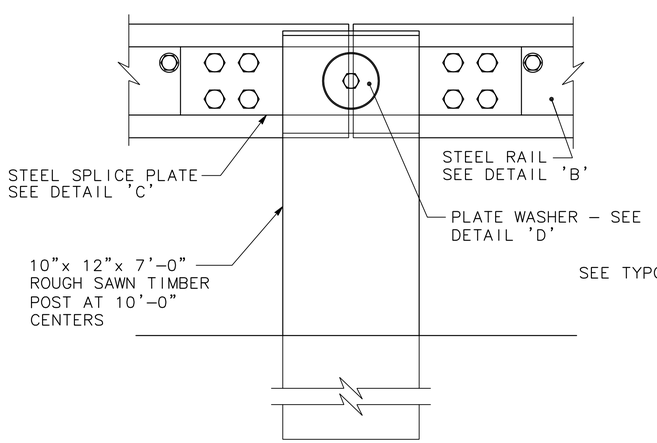

ELEVATION

DETAIL 'A' - POST CONNECTION

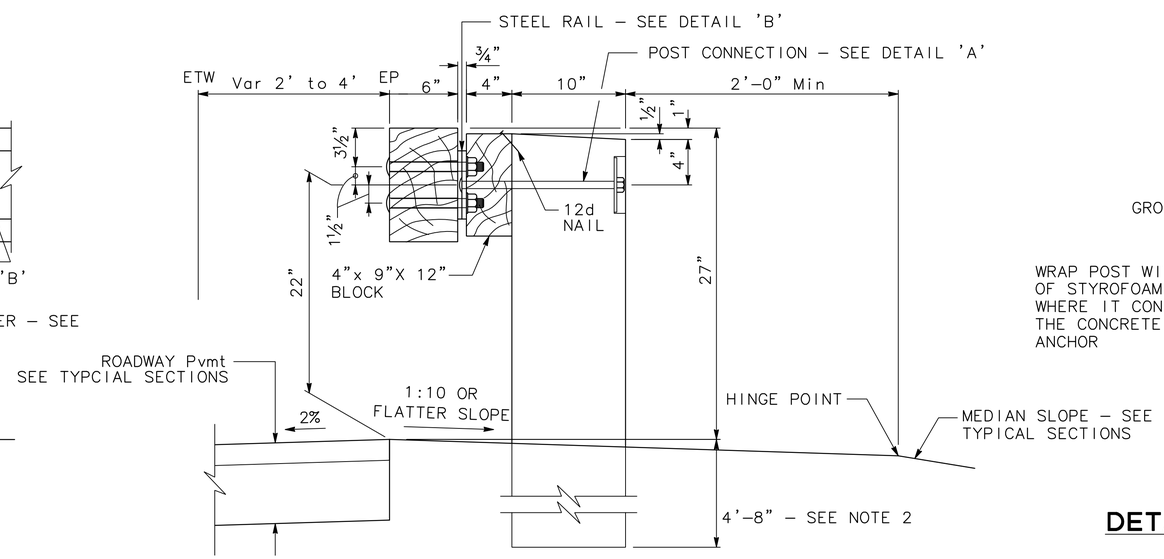

TYPICAL GUARDRAIL CROSS SECTION

1 / C-6 STEEL-BACKED TIMBER GUARDRAIL (SINGLE SIDED)

CONSTRUCTION DETAILS

NO SCALE

C-6

STATE OF CALIFORNIA - DEPARTMENT OF TRANSPORTATION
Caltrans
CONSULTANT FUNCTIONAL SUPERVISOR: ROBERT MATTHEW BROGAN
CALCULATED-DESIGNED BY: J. PANGBURN
CHECKED BY: M. BROGAN
REVISED BY
DATE REVISED

PATH: V:\Chico-55-0131-SR32 Widening\CADD\Drawing\ FILE NAME: sr32_C5-C8 PLOT DATE: Dec 20, 2011-08:57:29am CAD USER: amillar

LAST REVISION 00-00-00 DATE PLOTTED => $DATE TIME PLOTTED => $TIME

Dist	COUNTY	ROUTE	POST MILES TOTAL PROJECT	SHEET No.	TOTAL SHEETS
03	But	32	10.3/11.3	29	144

R. M. Br 12-22-11
REGISTERED CIVIL ENGINEER DATE

DECEMBER 22, 2011
PLANS APPROVAL DATE

REGISTERED PROFESSIONAL ENGINEER ROBERT MATTHEW BROGAN No. 63854 Exp. 9/30/12 CIVIL STATE OF CALIFORNIA

THE STATE OF CALIFORNIA OR ITS OFFICERS OR AGENTS SHALL NOT BE RESPONSIBLE FOR THE ACCURACY OR COMPLETENESS OF SCANNED COPIES OF THIS PLAN SHEET.

MARK THOMAS & CO., INC.
7300 FOLSOM BLVD STE 203
SACRAMENTO, CA 95826

CITY OF CHICO
CAPITAL PROJECT SERVICES
411 MAIN STREET
CHICO, CA 95927

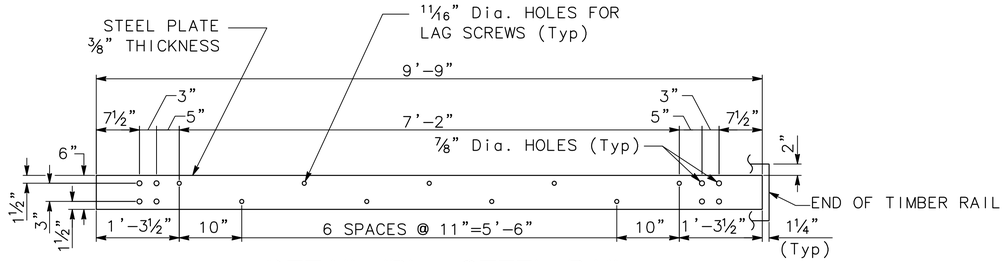

DETAIL 'B' - STEEL RAIL

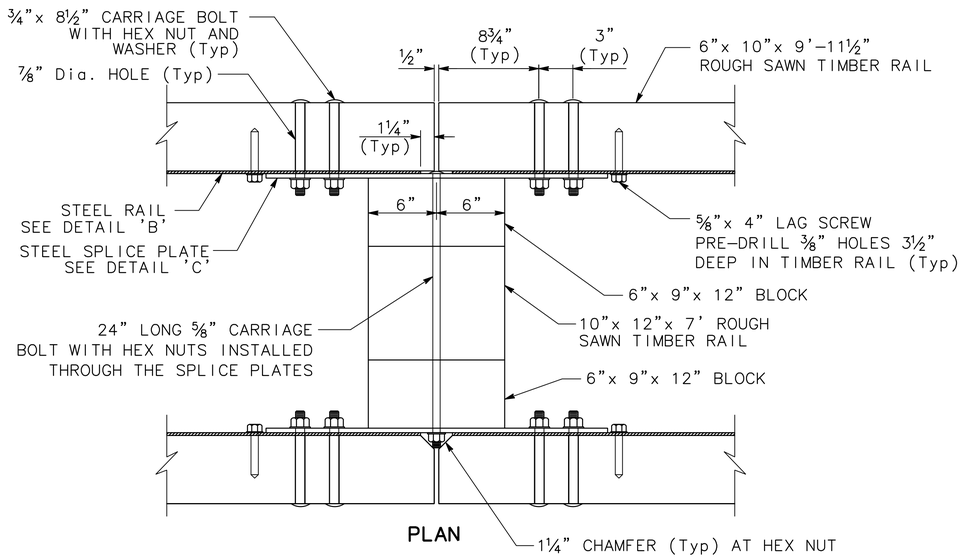

PLAN

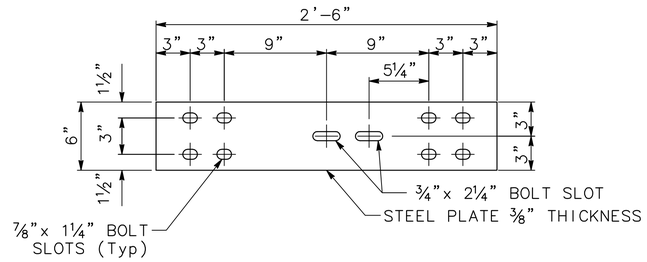

DETAIL 'D' - MODIFIED STEEL SPLICE PLATE

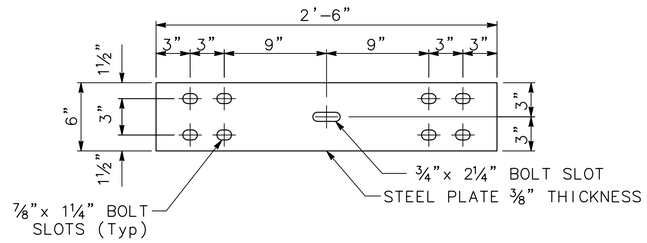

DETAIL 'C' - STEEL SPLICE PLATE

NOTE:

1. USE WEATHERING STEEL FOR ALL STRUCTURAL STEEL AND FASTENER HARDWARE AS SPECIFIED.
2. USE A CONCRETE ANCHOR WHEN STANDARD EMBEDMENT LENGTH CANNOT BE ACHIEVED. SEE DETAIL 'E'.
3. USE NO MORE THAN 3 SHORT GUARDRAIL POSTS IN A ROW. A 24" DIAMETER ROUND ANCHOR MAY BE USED INSTEAD OF THE SQUARE ANCHOR SHOWN. A REDUCED SIZE IS ACCEPTABLE IN SOLID ROCK.
4. SEE SHEET C-5 FOR VEGETATION CONTROL DETAILS.

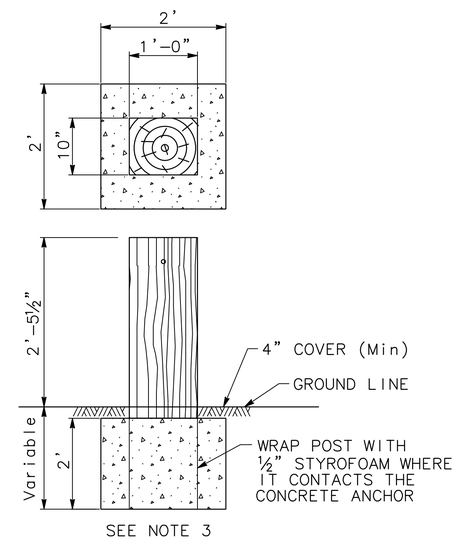

DETAIL 'E' - CONCRETE ANCHOR FOR SHORT GUARDRAIL POST

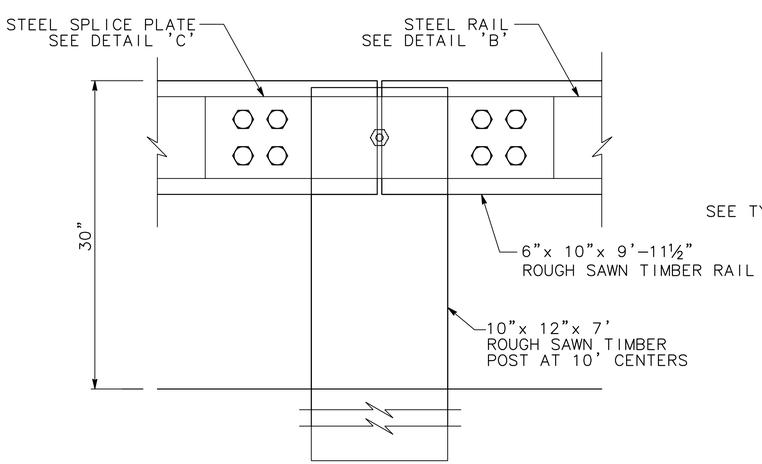

ELEVATION

DETAIL 'A' - POST CONNECTION

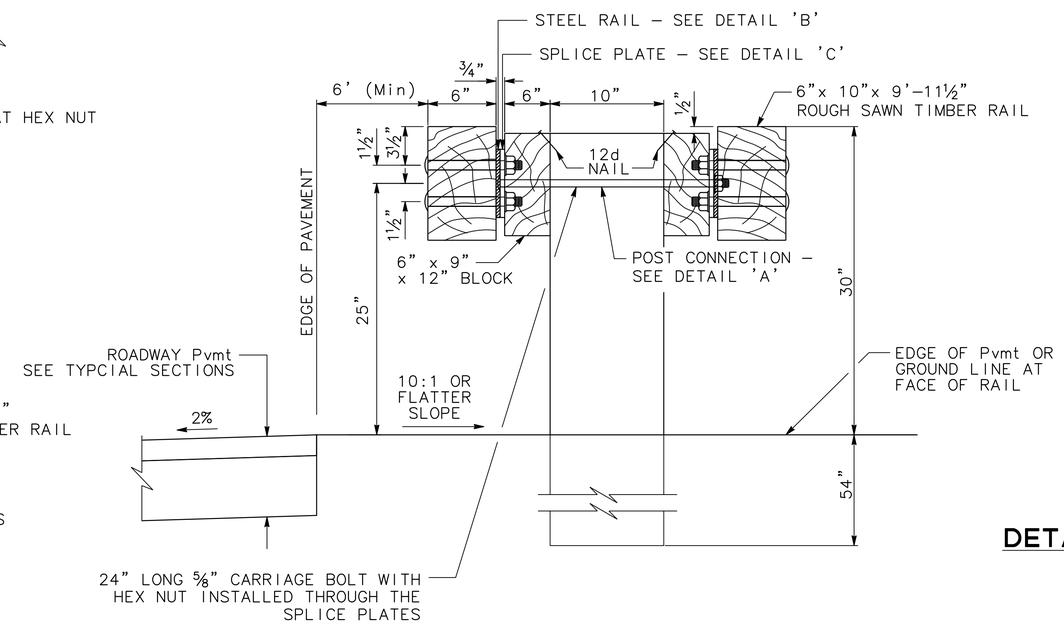

TYPICAL GUARDRAIL CROSS SECTION

1 / C-7 STEEL-BACKED TIMBER GUARDRAIL (DOUBLE SIDED)

CONSTRUCTION DETAILS

NO SCALE

C-7

STATE OF CALIFORNIA - DEPARTMENT OF TRANSPORTATION
Caltrans
CONSULTANT FUNCTIONAL SUPERVISOR: ROBERT MATTHEW BROGAN
CALCULATED-DESIGNED BY: J. PANGBURN
CHECKED BY: M. BROGAN
REVISED BY
DATE REVISED

PATH: V:\Chico-55-0131-SR32 Widening\CADD\Drawing\ FILE NAME: sr32_C5-C8 PLOT DATE: Dec 20, 2011-08:57:45am CAD USER: amillar

LAST REVISION 00-00-00 DATE PLOTTED => $DATE TIME PLOTTED => $TIME

BORDER LAST REVISED 7/2/2010 | USERNAME => $USER DGN FILE => $REQUEST | RELATIVE BORDER SCALE IS IN INCHES 0 1 2 3 | UNIT 0000 | PROJECT NUMBER & PHASE 0300000261

Dist	COUNTY	ROUTE	POST MILES TOTAL PROJECT	SHEET No.	TOTAL SHEETS
03	But	32	10.3/11.3	30	144

R.M. Brogan 12-22-11
REGISTERED CIVIL ENGINEER DATE

DECEMBER 22, 2011
PLANS APPROVAL DATE

REGISTERED PROFESSIONAL ENGINEER ROBERT MATTHEW BROGAN No. 63854 Exp. 9/30/12 CIVIL STATE OF CALIFORNIA

THE STATE OF CALIFORNIA OR ITS OFFICERS OR AGENTS SHALL NOT BE RESPONSIBLE FOR THE ACCURACY OR COMPLETENESS OF SCANNED COPIES OF THIS PLAN SHEET.

MARK THOMAS & CO., INC.
7300 FOLSOM BLVD STE 203
SACRAMENTO, CA 95826

CITY OF CHICO
CAPITAL PROJECT SERVICES
411 MAIN STREET
CHICO, CA 95927

NOTES:

1. MBGR AND TERMINAL SYSTEM ADJACENT TO SBTG SHALL BE POWDER COATED.

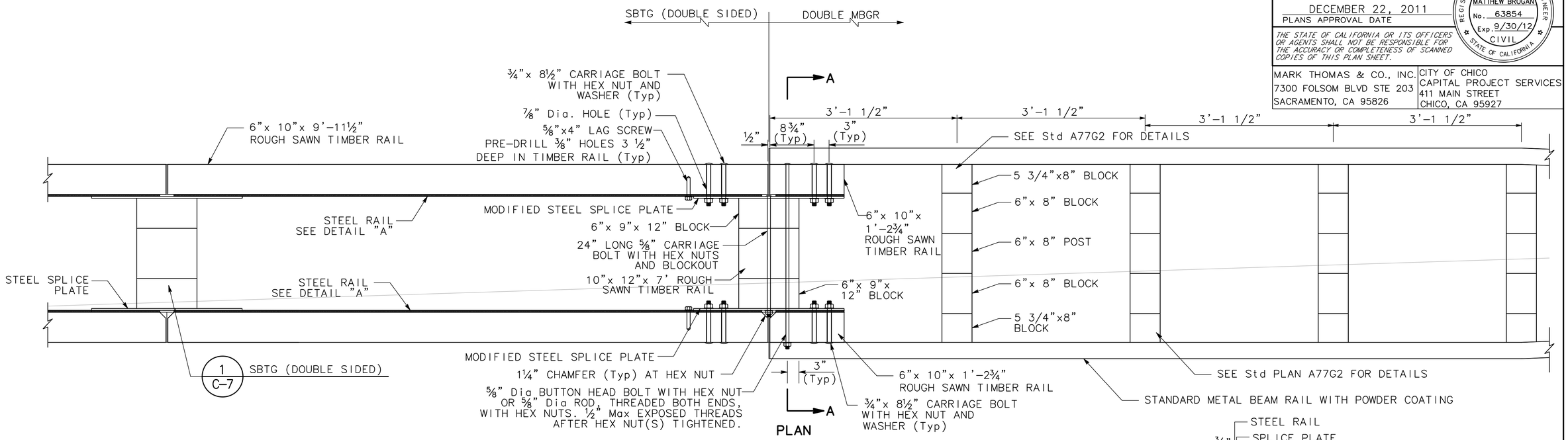

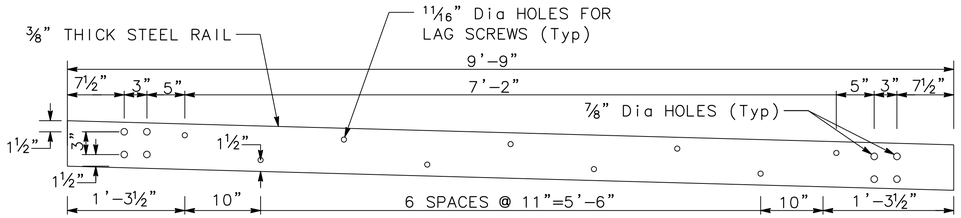

DETAIL 'A' - STEEL RAIL

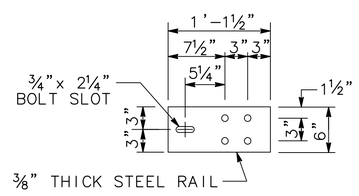

DETAIL 'B' - 1'-1 1/2" STEEL RAIL

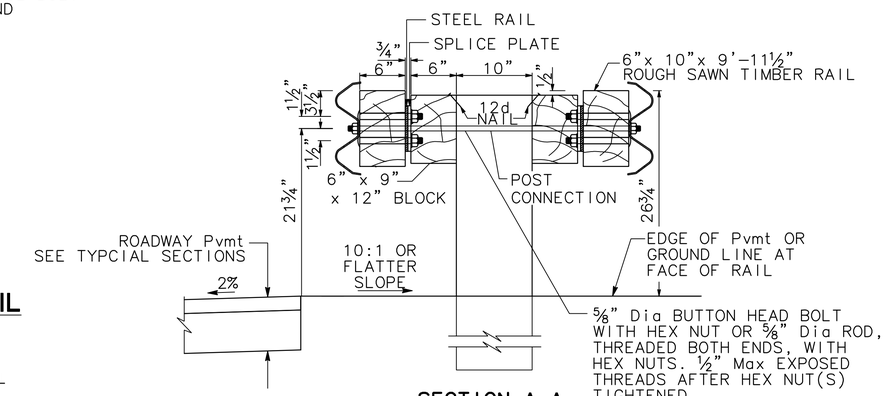

SECTION A-A

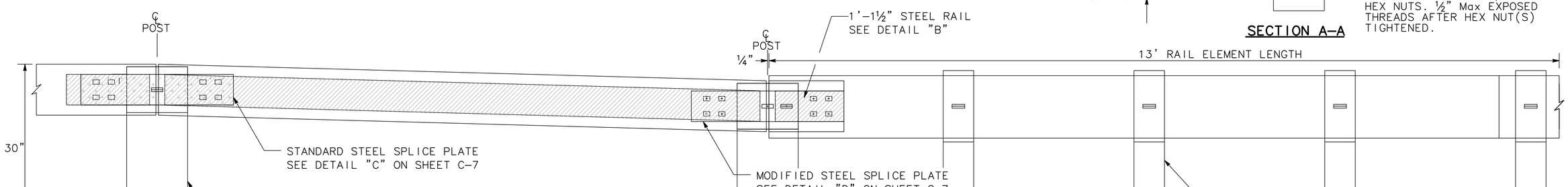

ELEVATION

1 / C-8 SBTG (DOUBLE SIDED) TO DOUBLE MBGR TRANSITION

CONSTRUCTION DETAILS

NO SCALE

C-8

STATE OF CALIFORNIA - DEPARTMENT OF TRANSPORTATION
Caltrans

CONSULTANT FUNCTIONAL SUPERVISOR: ROBERT MATTHEW BROGAN
CALCULATED-DESIGNED BY: J. PANGBURN
CHECKED BY: M. BROGAN
REVISED BY
DATE REVISED

PATH: V:\Chico-55-0131-SR32 Widening\CADD\Drawing\ FILE NAME: sr32_C5-C8 PLOT DATE: Dec 20, 2011-08:58:08am CAD USER: amillar

LAST REVISION 00-00-00 DATE PLOTTED => $DATE TIME PLOTTED => $TIME

BORDER LAST REVISED 7/2/2010 | USERNAME => $USER DGN FILE => $REQUEST | RELATIVE BORDER SCALE IS IN INCHES 0 1 2 3 | UNIT 0000 | PROJECT NUMBER & PHASE 0300000261

Dist	COUNTY	ROUTE	POST MILES TOTAL PROJECT	SHEET No.	TOTAL SHEETS
03	But	32	10.3/11.3	31	144

R.M.Br 12-22-11
REGISTERED CIVIL ENGINEER DATE

DECEMBER 22, 2011
PLANS APPROVAL DATE

REGISTERED PROFESSIONAL ENGINEER
ROBERT MATTHEW BROGAN
No. 63854
Exp. 9/30/12
CIVIL
STATE OF CALIFORNIA

THE STATE OF CALIFORNIA OR ITS OFFICERS OR AGENTS SHALL NOT BE RESPONSIBLE FOR THE ACCURACY OR COMPLETENESS OF SCANNED COPIES OF THIS PLAN SHEET.

MARK THOMAS & CO., INC.
7300 FOLSOM BLVD STE 203
SACRAMENTO, CA 95826

CITY OF CHICO
CAPITAL PROJECT SERVICES
411 MAIN STREET
CHICO, CA 95927

LEGEND (THIS SHEET ONLY)

- NEW STRUCTURAL SECTION (SEE TYPICAL SECTIONS)
- 0.15' (min) HMA-A OVERLAY
  0.10' HMA-O OVERLAY
- COLD FOAM IN-PLACE RECYCLING
  0.35' (min) HMA-A OVERLAY
  0.10' HMA-O OVERLAY
- COLD FOAM IN-PLACE RECYCLING
  0.15' Min OVERLAY
  0.10' HMA-O
- 0.15' Min OVERLAY

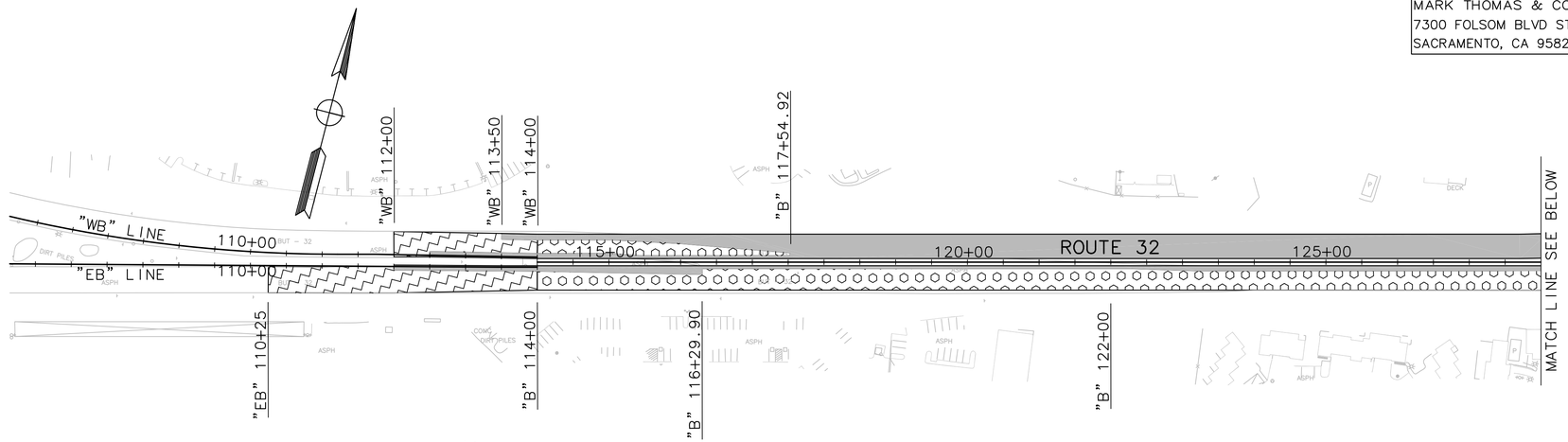

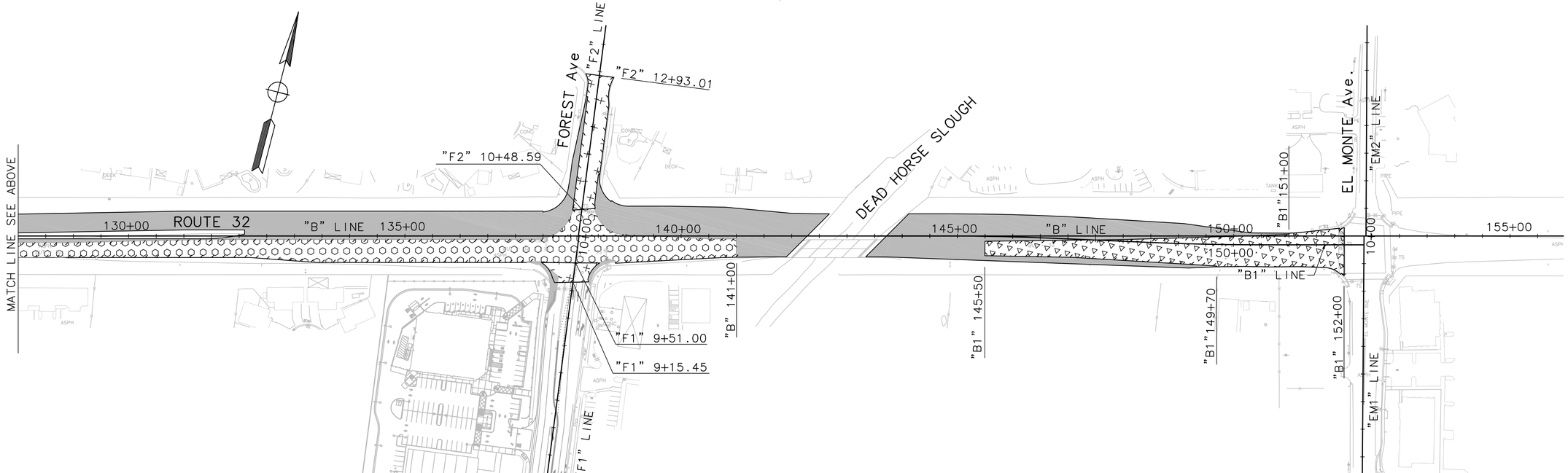

PAVEMENT REHABILITATION LAYOUT

CONSTRUCTION DETAILS

SCALE: 1"=100'

C-9

STATE OF CALIFORNIA - DEPARTMENT OF TRANSPORTATION
Caltrans

CONSULTANT FUNCTIONAL SUPERVISOR: ROBERT MATTHEW BROGAN
CALCULATED-DESIGNED BY: J. PANGBURN
CHECKED BY: M. BROGAN
REVISED BY
DATE REVISED

PATH: V:\Chico-55-0131-SR32 Widening\CADD\Drawing\ FILE NAME: sr32_C9 PLOT DATE: Dec 20, 2011-08:59:43am CAD USER: amillar

LAST REVISION 00-00-00 DATE PLOTTED => $DATE TIME PLOTTED => $TIME

BORDER LAST REVISED 7/2/2010 | USERNAME => $USER DGN FILE => $REQUEST | RELATIVE BORDER SCALE IS IN INCHES 0 1 2 3 | UNIT 0000 | PROJECT NUMBER & PHASE 0300000261

Dist	COUNTY	ROUTE	POST MILES TOTAL PROJECT	SHEET No.	TOTAL SHEETS
03	But	32	10.3/11.3	32	144

R.M. Brogan 12-22-11
REGISTERED CIVIL ENGINEER DATE

DECEMBER 22, 2011
PLANS APPROVAL DATE

REGISTERED PROFESSIONAL ENGINEER ROBERT MATTHEW BROGAN No. 63854 Exp. 9/30/12 CIVIL STATE OF CALIFORNIA

THE STATE OF CALIFORNIA OR ITS OFFICERS OR AGENTS SHALL NOT BE RESPONSIBLE FOR THE ACCURACY OR COMPLETENESS OF SCANNED COPIES OF THIS PLAN SHEET.

MARK THOMAS & CO., INC.
7300 FOLSOM BLVD STE 203
SACRAMENTO, CA 95826

CITY OF CHICO
CAPITAL PROJECT SERVICES
411 MAIN STREET
CHICO, CA 95927

NOTES:

1. ALL STATION AND OFFSET CALLOUTS TO INLETS ARE TO FLOW LINE AT FACE OF CURB UNLESS OTHERWISE NOTED.
2. EXISTING DRAINAGE LOCATIONS ARE APPROXIMATE ONLY. CONTRACTOR SHALL VERIFY LOCATION AND ELEVATION BEFORE MODIFYING EXISTING DRAINAGE FACILITIES.
3. TOP OF GRATE ELEVATIONS INCLUDE GUTTER DEPRESSIONS WHERE NOTED.
4. ALL STATION & OFFSET INFORMATION REFERS TO THE "B" LINE UNLESS OTHERWISE NOTED.
5. CONTRACTOR SHALL AVOID EXISTING TREES TO REMAIN AS SHOWN ON THE TREE REMOVAL PLAN. THE CONTRACTOR MUST COORDINATE AVOIDANCE MEASURES WITH THE ENGINEER PRIOR TO UTILIZING THE "TREE AVOIDANCE DETAIL" SHOWN ON THIS SHEET.

LEGEND – DRAINAGE ONLY

- XX — DRAINAGE SYSTEM NUMBER
- 1 — BIOFILTRATION SWALE NUMBER
- X — DRAINAGE ITEM
- DITCH FLOW LINE
- EXISTING DITCH FLOW LINE
- EXISTING STORM DRAIN PIPE
- PROPOSED STORM DRAIN PIPE
- PROPOSED INLET
- BIOFILTRATION STRIP
- X / D-X — DRAINAGE DETAIL REFERENCE

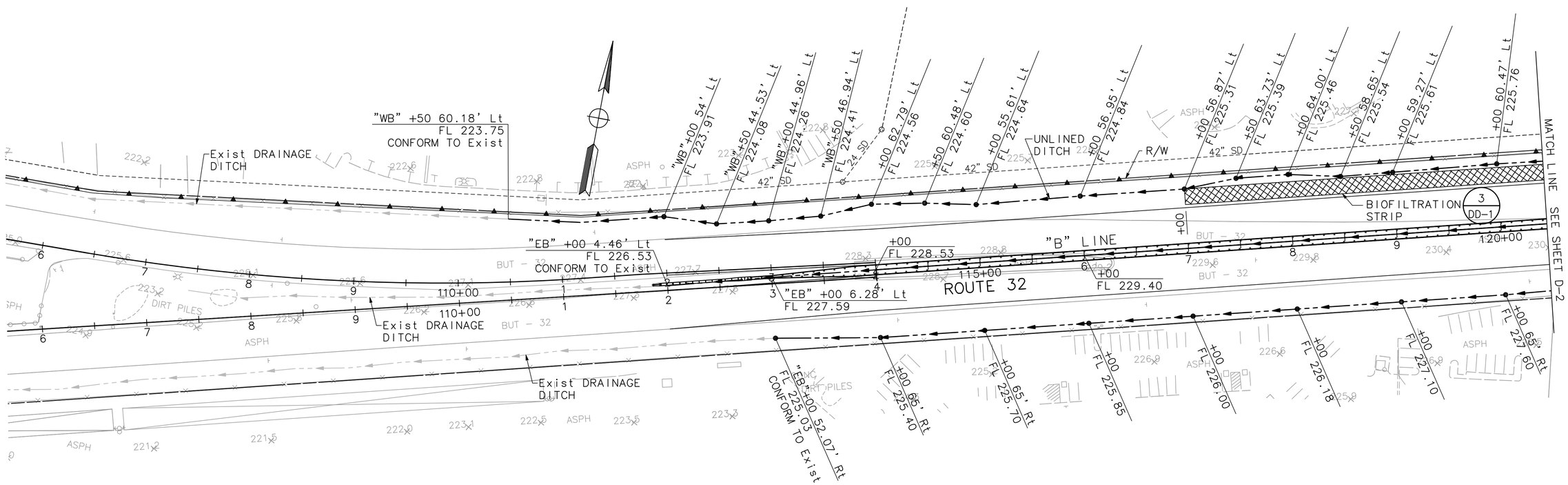

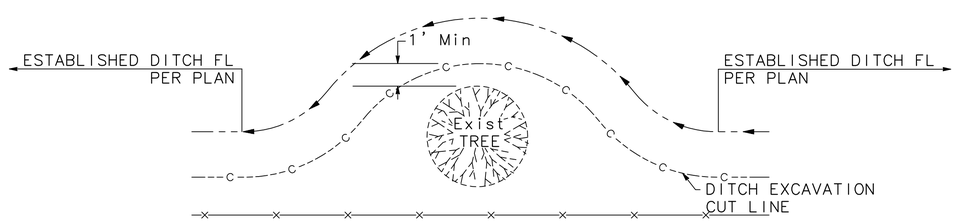

TREE AVOIDANCE DETAIL

"EB" 112+00 TO "B" 129+50 Rt

DRAINAGE PLAN

SCALE: 1" = 50'

D-1

THIS PLAN ACCURATE FOR DRAINAGE ONLY

STATE OF CALIFORNIA – DEPARTMENT OF TRANSPORTATION

Caltrans

CONSULTANT FUNCTIONAL SUPERVISOR: ROBERT MATTHEW BROGAN

CALCULATED-DESIGNED BY: J. PANGBURN

CHECKED BY: M. BROGAN

REVISED BY

DATE REVISED

PATH: V:\Chico-55-0131-SR32 Widening\CADD\Drawing\ FILE NAME: sr32_D1-D4 PLOT DATE: Dec 20, 2011-09:00:49am CAD USER: amillar

LAST REVISION 00-00-00 | DATE PLOTTED => $DATE | TIME PLOTTED => $TIME

BORDER LAST REVISED 7/2/2010 | USERNAME => $USER | DGN FILE => $REQUEST | RELATIVE BORDER SCALE IS IN INCHES 0 1 2 3 | UNIT 0000 | PROJECT NUMBER & PHASE 0300000261

Dist	COUNTY	ROUTE	POST MILES TOTAL PROJECT	SHEET No.	TOTAL SHEETS
03	But	32	10.3/11.3	33	144

R.M. Brogan 12-22-11
REGISTERED CIVIL ENGINEER DATE

DECEMBER 22, 2011
PLANS APPROVAL DATE

REGISTERED PROFESSIONAL ENGINEER ROBERT MATTHEW BROGAN No. 63854 Exp. 9/30/12 CIVIL STATE OF CALIFORNIA

THE STATE OF CALIFORNIA OR ITS OFFICERS OR AGENTS SHALL NOT BE RESPONSIBLE FOR THE ACCURACY OR COMPLETENESS OF SCANNED COPIES OF THIS PLAN SHEET.

MARK THOMAS & CO., INC.
7300 FOLSOM BLVD STE 203
SACRAMENTO, CA 95826

CITY OF CHICO
CAPITAL PROJECT SERVICES
411 MAIN STREET
CHICO, CA 95927

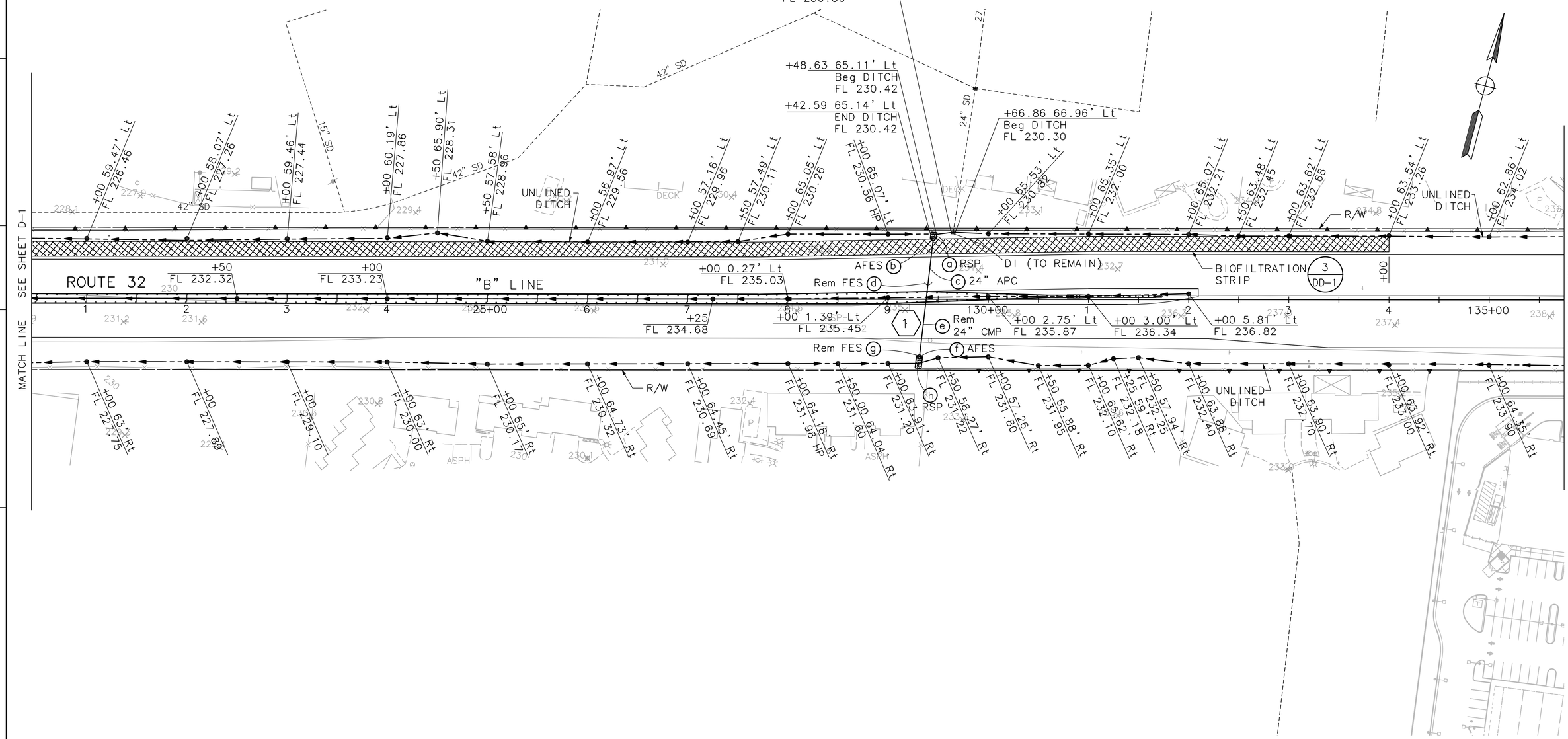

DRAINAGE PLAN

SCALE: 1" = 50'

D-2

THIS PLAN ACCURATE FOR DRAINAGE ONLY

REVISED BY	DATE REVISED

CALCULATED-DESIGNED BY	CHECKED BY
J. PANGBURN	M. BROGAN

CONSULTANT FUNCTIONAL SUPERVISOR: ROBERT MATTHEW BROGAN

STATE OF CALIFORNIA – DEPARTMENT OF TRANSPORTATION

Caltrans

PATH: V:\Chico-55-0131-SR32 Widening\CADD\Drawing\ FILE NAME: sr32_D1-D4 PLOT DATE: Dec 20, 2011-09:01:07am CAD USER: amillar

LAST REVISION 00-00-00 DATE PLOTTED => $DATE TIME PLOTTED => $TIME

Dist	COUNTY	ROUTE	POST MILES TOTAL PROJECT	SHEET No.	TOTAL SHEETS
03	But	32	10.3/11.3	34	144

R.M. Brogan 12-22-11
REGISTERED CIVIL ENGINEER DATE

DECEMBER 22, 2011
PLANS APPROVAL DATE

REGISTERED PROFESSIONAL ENGINEER
ROBERT MATTHEW BROGAN
No. 63854
Exp. 9/30/12
CIVIL
STATE OF CALIFORNIA

THE STATE OF CALIFORNIA OR ITS OFFICERS OR AGENTS SHALL NOT BE RESPONSIBLE FOR THE ACCURACY OR COMPLETENESS OF SCANNED COPIES OF THIS PLAN SHEET.

MARK THOMAS & CO., INC.
7300 FOLSOM BLVD STE 203
SACRAMENTO, CA 95826

CITY OF CHICO
CAPITAL PROJECT SERVICES
411 MAIN STREET
CHICO, CA 95927

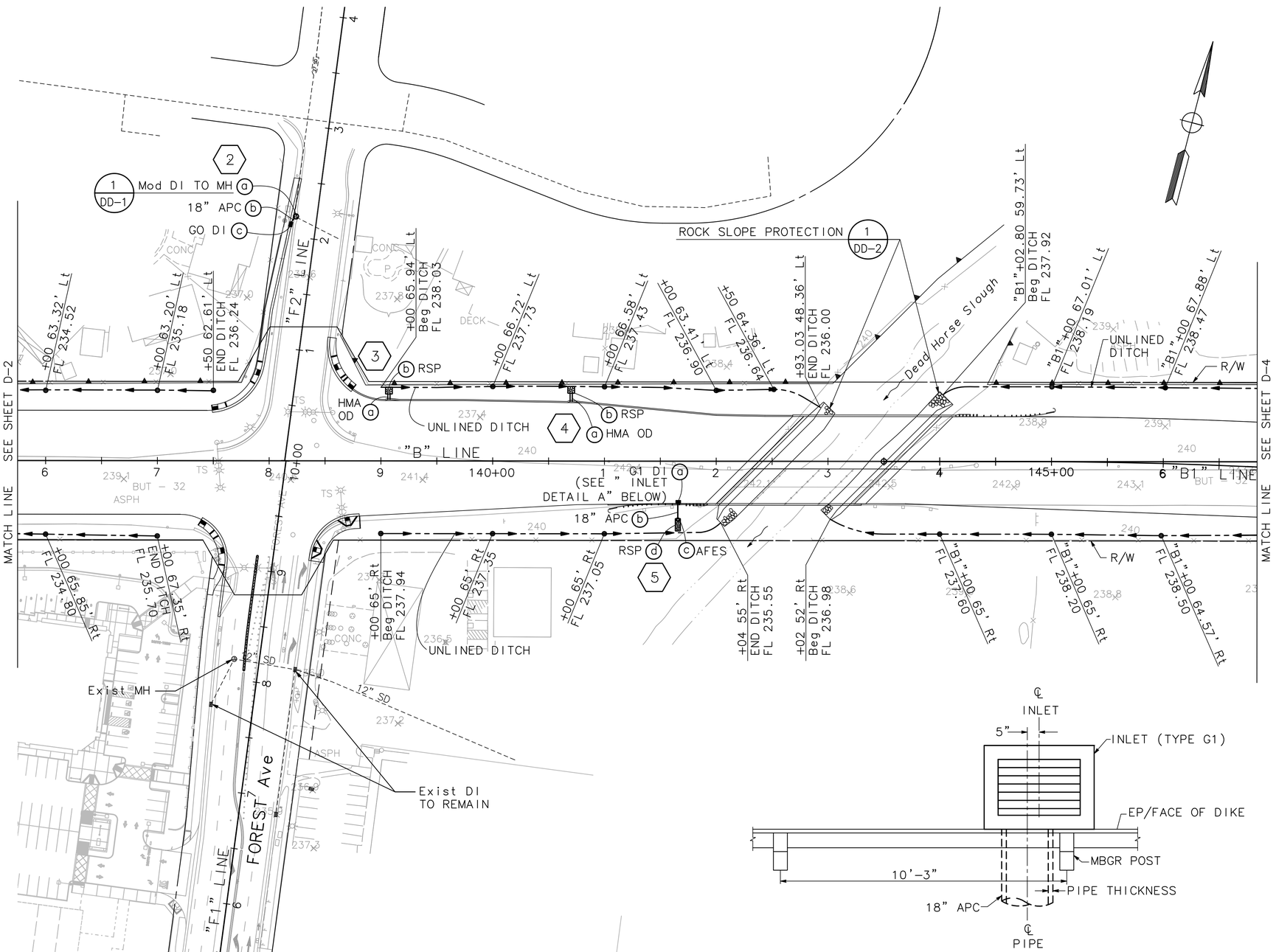

INILET DETAIL A

NO SCALE

FOR DETAILS NOT SHOWN, SEE Std PLAN D73

THIS PLAN ACCURATE FOR DRAINAGE ONLY

DRAINAGE PLAN

SCALE: 1" = 50'

D-3

STATE OF CALIFORNIA – DEPARTMENT OF TRANSPORTATION

Caltrans

CONSULTANT FUNCTIONAL SUPERVISOR: ROBERT MATTHEW BROGAN

CALCULATED-DESIGNED BY: J. PANGBURN

CHECKED BY: M. BROGAN

REVISED BY

DATE REVISED

PATH: V:\Chico-55-0131-SR32 Widening\CADD\Drawing\ FILE NAME: sr32_D1-D4 PLOT DATE: Dec 20, 2011-10:25:09am CAD USER: amillar

LAST REVISION 00-00-00 DATE PLOTTED => $DATE TIME PLOTTED => $TIME

BORDER LAST REVISED 7/2/2010 | USERNAME => $USER DGN FILE => $REQUEST | RELATIVE BORDER SCALE IS IN INCHES 0 1 2 3 | UNIT 0000 | PROJECT NUMBER & PHASE 0300000261

Dist	COUNTY	ROUTE	POST MILES TOTAL PROJECT	SHEET No.	TOTAL SHEETS
03	But	32	10.3/11.3	35	144

R.M. Brogan 12-22-11
REGISTERED CIVIL ENGINEER DATE

DECEMBER 22, 2011
PLANS APPROVAL DATE

REGISTERED PROFESSIONAL ENGINEER
ROBERT MATTHEW BROGAN
No. 63854
Exp. 9/30/12
CIVIL
STATE OF CALIFORNIA

THE STATE OF CALIFORNIA OR ITS OFFICERS OR AGENTS SHALL NOT BE RESPONSIBLE FOR THE ACCURACY OR COMPLETENESS OF SCANNED COPIES OF THIS PLAN SHEET.

MARK THOMAS & CO., INC.
7300 FOLSOM BLVD STE 203
SACRAMENTO, CA 95826

CITY OF CHICO
CAPITAL PROJECT SERVICES
411 MAIN STREET
CHICO, CA 95927

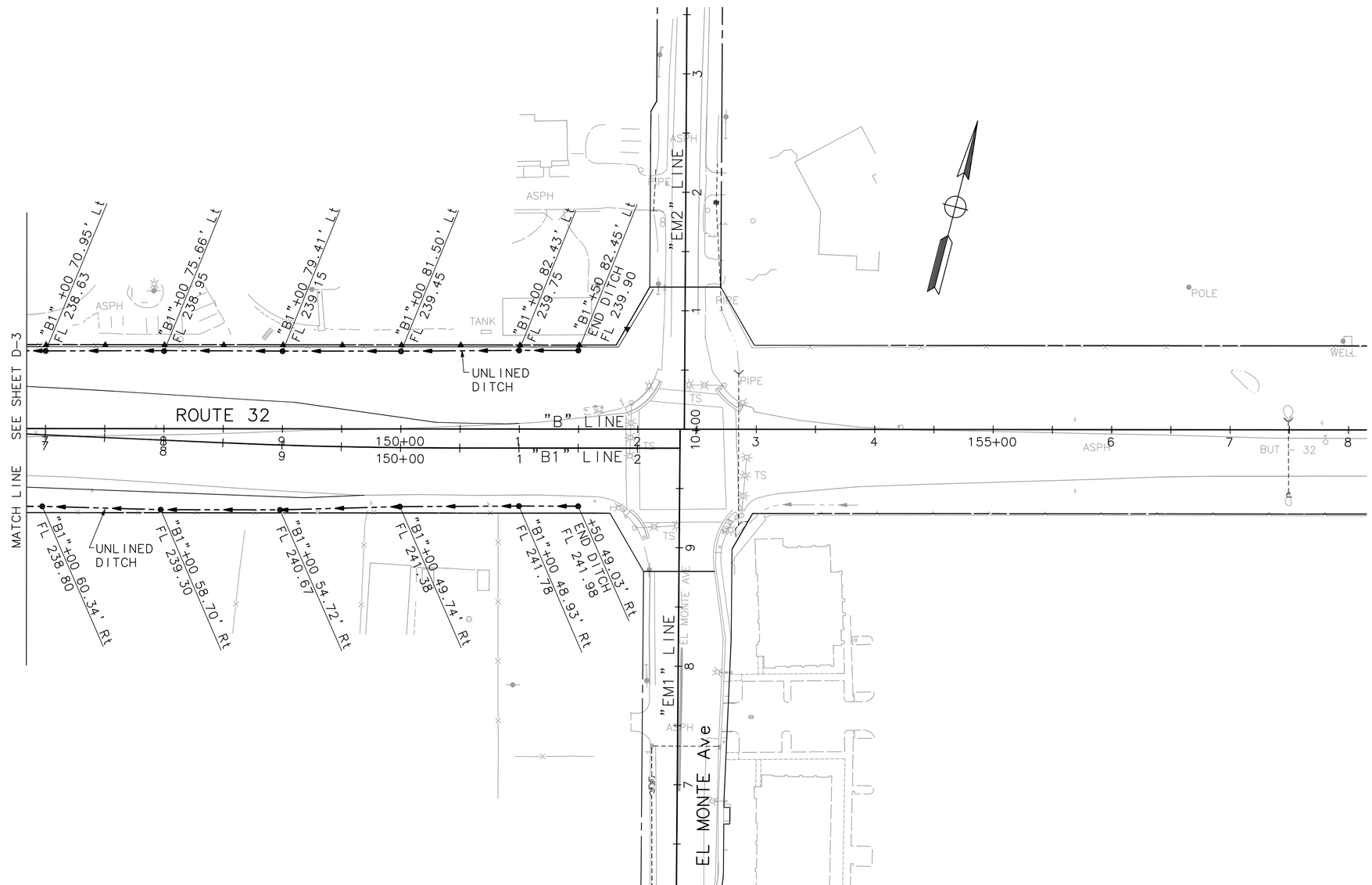

THIS PLAN ACCURATE FOR DRAINAGE ONLY

DRAINAGE PLAN

SCALE: 1" = 50'

D-4

STATE OF CALIFORNIA – DEPARTMENT OF TRANSPORTATION
Caltrans

CONSULTANT FUNCTIONAL SUPERVISOR: ROBERT MATTHEW BROGAN

CALCULATED-DESIGNED BY: J. PANGBURN
CHECKED BY: M. BROGAN

REVISED BY
DATE REVISED

LAST REVISION 00-00-00
DATE PLOTTED => $DATE
TIME PLOTTED => $TIME

PATH: V:\Chico-55-0131-SR32 Widening\CADD\Drawing\ FILE NAME: sr32_D1-D4 PLOT DATE: Dec 20, 2011-09:01:51am CAD USER: amillar

Dist	COUNTY	ROUTE	POST MILES TOTAL PROJECT	SHEET No.	TOTAL SHEETS
03	But	32	10.3/11.3	36	144

R.M.Bro 12-22-11
REGISTERED CIVIL ENGINEER DATE

DECEMBER 22, 2011
PLANS APPROVAL DATE

REGISTERED PROFESSIONAL ENGINEER ROBERT MATTHEW BROGAN No. 63854 Exp. 9/30/12 CIVIL STATE OF CALIFORNIA

THE STATE OF CALIFORNIA OR ITS OFFICERS OR AGENTS SHALL NOT BE RESPONSIBLE FOR THE ACCURACY OR COMPLETENESS OF SCANNED COPIES OF THIS PLAN SHEET.

MARK THOMAS & CO., INC.
7300 FOLSOM BLVD STE 203
SACRAMENTO, CA 95826

CITY OF CHICO
CAPITAL PROJECT SERVICES
411 MAIN STREET
CHICO, CA 95927

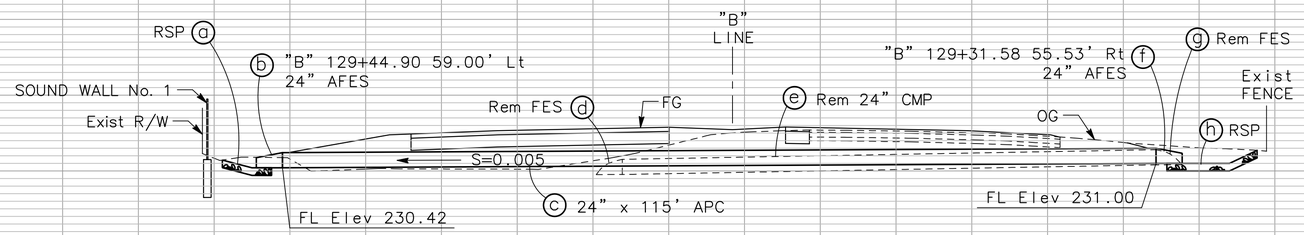

DRAINAGE SYSTEM NO. 1

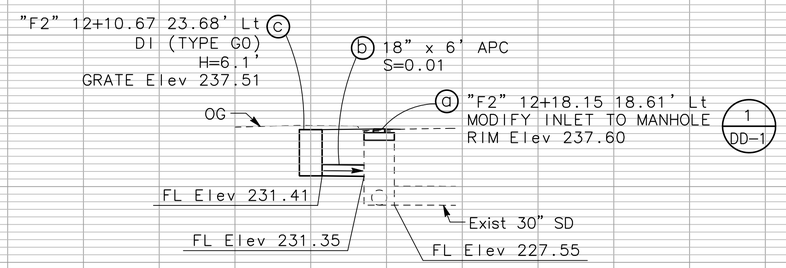

DRAINAGE SYSTEM NO. 2

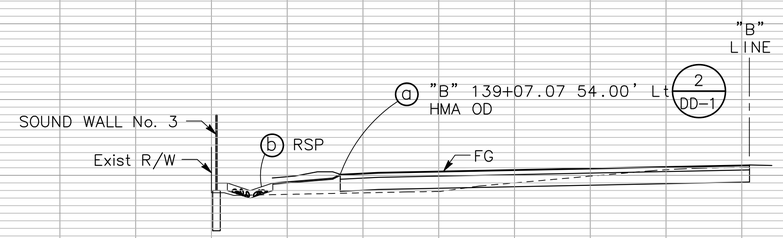

DRAINAGE SYSTEM NO. 3

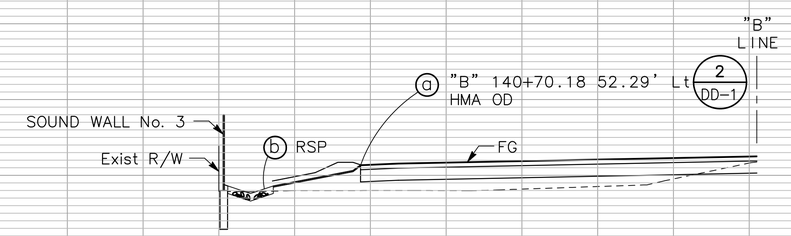

DRAINAGE SYSTEM NO. 4

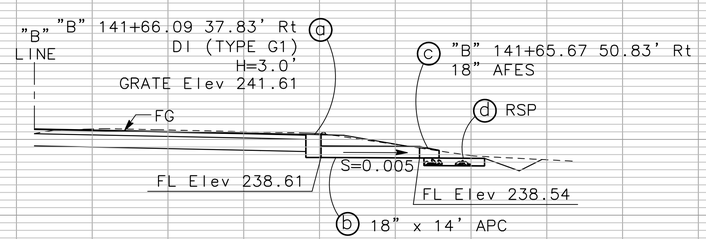

DRAINAGE SYSTEM NO. 5

DRAINAGE PROFILES

SCALE: HORIZ 1"=10'
VERT 1"=10'

DP-1

STATE OF CALIFORNIA - DEPARTMENT OF TRANSPORTATION
Caltrans

CONSULTANT FUNCTIONAL SUPERVISOR: ROBERT MATTHEW BROGAN
CALCULATED-DESIGNED BY: J. PANGBURN
CHECKED BY: M. BROGAN
REVISED BY
DATE REVISED

PATH: V:\Chico-55-0131-SR32 Widening\CADD\Drawing\ FILE NAME: sr32_DP1 PLOT DATE: Dec 20, 2011-09:04:07am CAD USER: amillar

LAST REVISION 00-00-00 DATE PLOTTED => $DATE TIME PLOTTED => $TIME

Dist	COUNTY	ROUTE	POST MILES TOTAL PROJECT	SHEET No.	TOTAL SHEETS
03	But	32	10.3/11.3	37	144

R.M. Brogan 12-22-11
REGISTERED CIVIL ENGINEER DATE

DECEMBER 22, 2011
PLANS APPROVAL DATE

REGISTERED PROFESSIONAL ENGINEER ROBERT MATTHEW BROGAN No. 63854 Exp. 9/30/12 CIVIL STATE OF CALIFORNIA

THE STATE OF CALIFORNIA OR ITS OFFICERS OR AGENTS SHALL NOT BE RESPONSIBLE FOR THE ACCURACY OR COMPLETENESS OF SCANNED COPIES OF THIS PLAN SHEET.

MARK THOMAS & CO., INC.
7300 FOLSOM BLVD STE 203
SACRAMENTO, CA 95826

CITY OF CHICO
CAPITAL PROJECT SERVICES
411 MAIN STREET
CHICO, CA 95927

APC ALLOWABLE PIPE MATERIAL

DESCRIPTION	CSP (0.138") (GALVANIZED)	CAP (0.064")	RCP
	SIZE	SIZE	SIZE
18"	18"	18"	18"
24"	24"	24"	24"

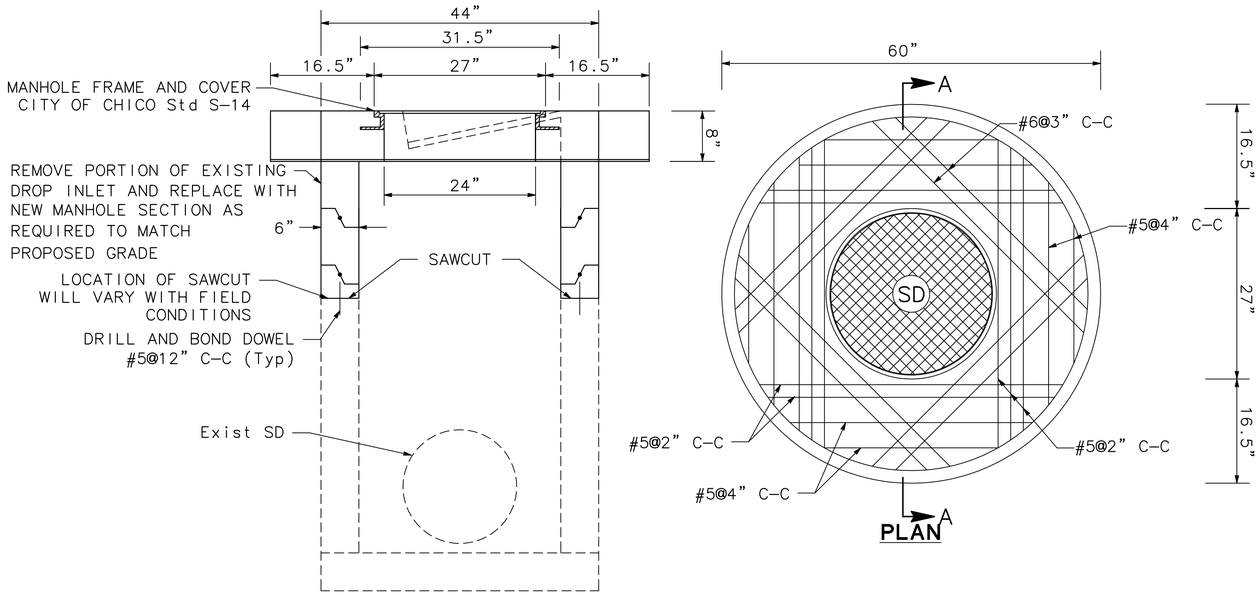

SECTION A-A

PLAN

MODIFY DROP INLET TO MANHOLE (1 / DD-1)
NO SCALE

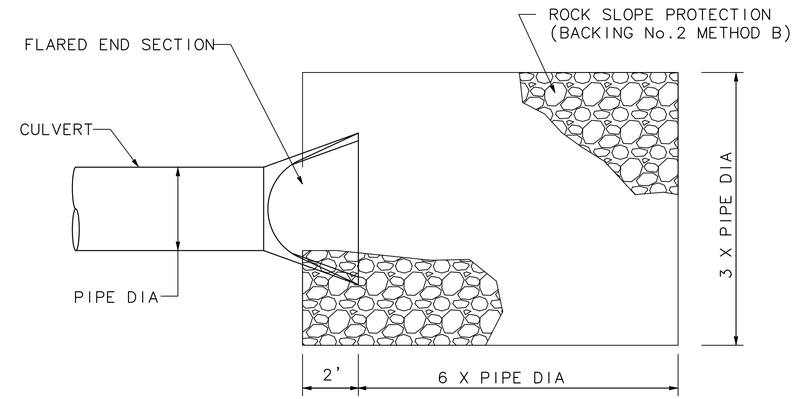

PLAN

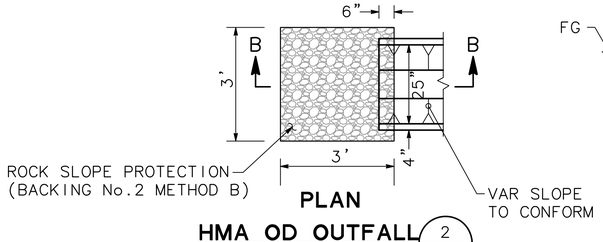

PLAN

HMA OD OUTFALL (2 / DD-1)
NO SCALE
(3)(b) (4)(b)

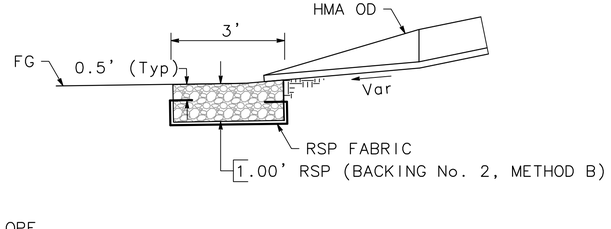

SECTION B-B

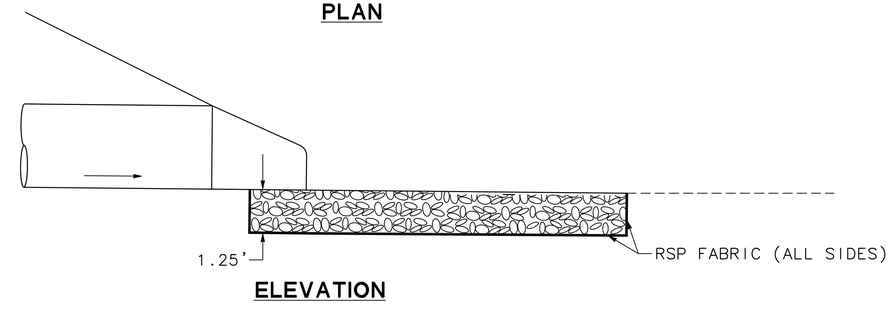

ELEVATION

ROCK SLOPE PROTECTION
(1)(a)(h) (5)(d)

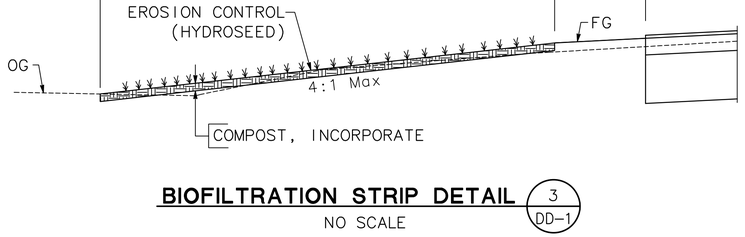

BIOFILTRATION STRIP DETAIL (3 / DD-1)
NO SCALE

DRAINAGE DETAILS
NO SCALE

DD-1

REVISED BY	DATE REVISED

CALCULATED-DESIGNED BY	CHECKED BY	CONSULTANT FUNCTIONAL SUPERVISOR
J. PANGBURN	M. BROGAN	ROBERT MATTHEW BROGAN

STATE OF CALIFORNIA - DEPARTMENT OF TRANSPORTATION
Caltrans

PATH: V:\Chico-55-0131-SR32 Widening\CADD\Drawing\ FILE NAME: sr32_DD1-DD2 PLOT DATE: Dec 20, 2011-09:03:01am CAD USER: amillar

LAST REVISION 00-00-00 DATE PLOTTED => $DATE TIME PLOTTED => $TIME

Dist	COUNTY	ROUTE	POST MILES TOTAL PROJECT	SHEET No.	TOTAL SHEETS
03	But	32	10.3/11.3	38	144

R.M.Br 12-22-11
REGISTERED CIVIL ENGINEER DATE

DECEMBER 22, 2011
PLANS APPROVAL DATE

REGISTERED PROFESSIONAL ENGINEER ROBERT MATTHEW BROGAN No. 63854 Exp. 9/30/12 CIVIL STATE OF CALIFORNIA

THE STATE OF CALIFORNIA OR ITS OFFICERS OR AGENTS SHALL NOT BE RESPONSIBLE FOR THE ACCURACY OR COMPLETENESS OF SCANNED COPIES OF THIS PLAN SHEET.

MARK THOMAS & CO., INC.
7300 FOLSOM BLVD STE 203
SACRAMENTO, CA 95826

CITY OF CHICO
CAPITAL PROJECT SERVICES
411 MAIN STREET
CHICO, CA 95927

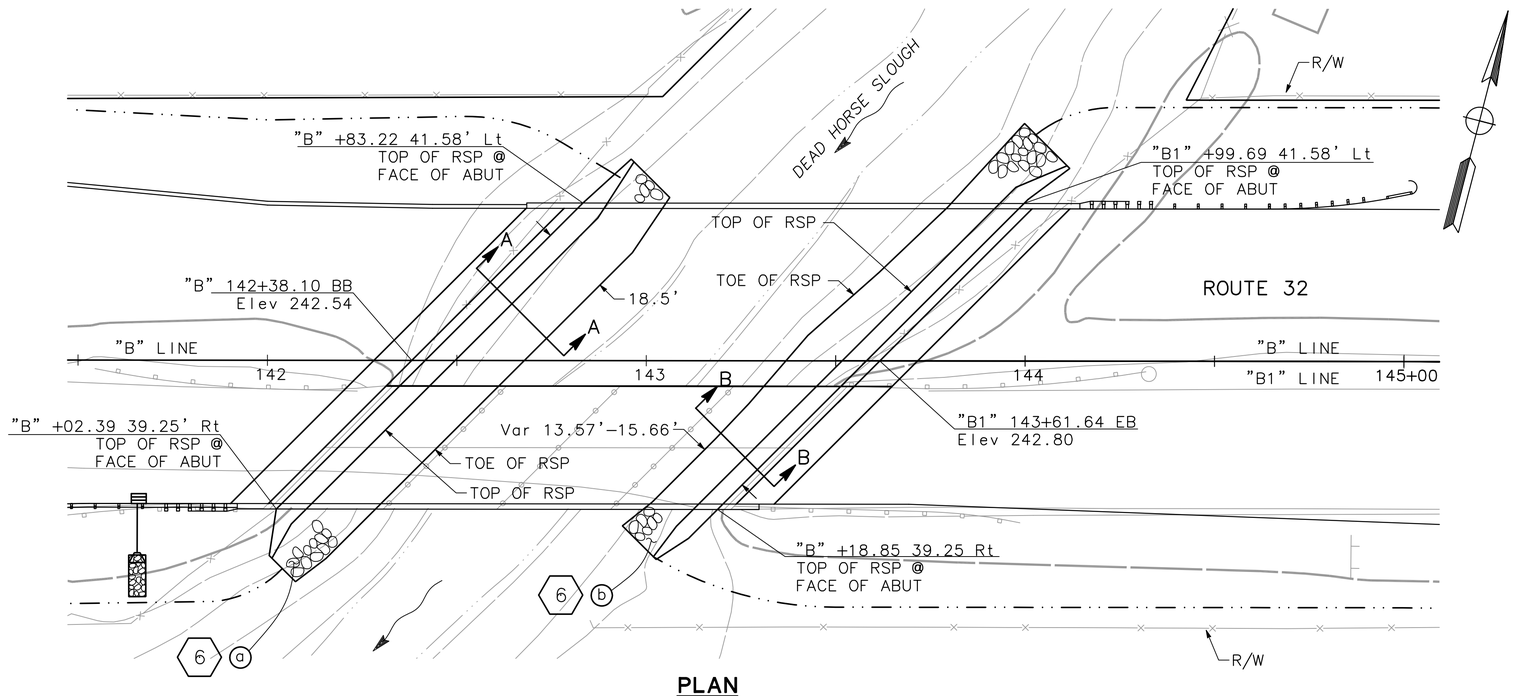

PLAN
SCALE:1" = 20'

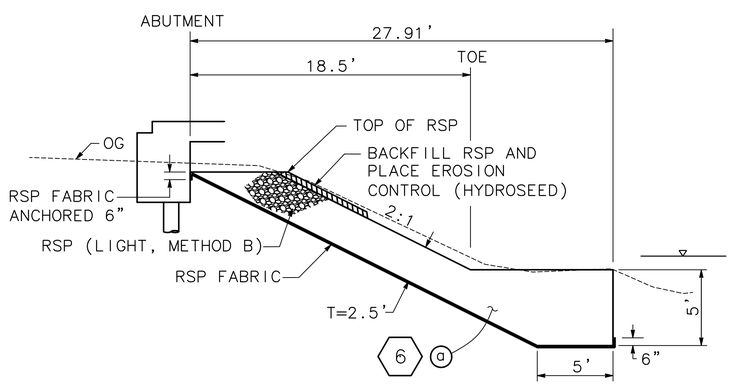

SECTION A-A
NO SCALE

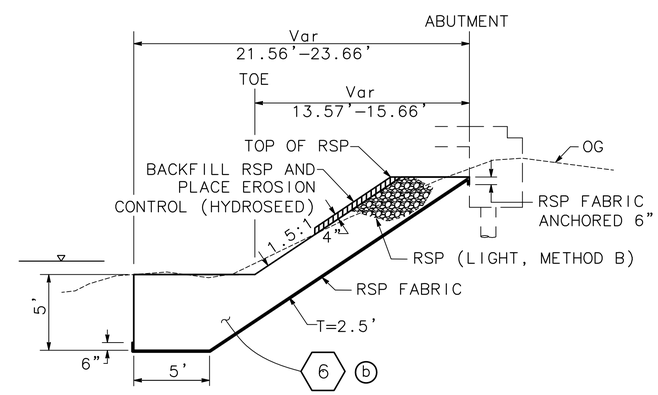

SECTION B-B
NO SCALE

1 DD-2 **ROCK SLOPE PROTECTION DETAIL**

DRAINAGE DETAILS
NO SCALE

DD-2

REVISED BY	DATE REVISED

CALCULATED-DESIGNED BY: J. PANGBURN
CHECKED BY: M. BROGAN
CONSULTANT FUNCTIONAL SUPERVISOR: ROBERT MATTHEW BROGAN

STATE OF CALIFORNIA - DEPARTMENT OF TRANSPORTATION

LAST REVISION 00-00-00 | DATE PLOTTED => $DATE | TIME PLOTTED => $TIME

Dist	COUNTY	ROUTE	POST MILES TOTAL PROJECT	SHEET No.	TOTAL SHEETS
03	But	32	10.3/11.3	39	144

R.M. Brogan 12-22-11
REGISTERED CIVIL ENGINEER DATE

DECEMBER 22, 2011
PLANS APPROVAL DATE

REGISTERED PROFESSIONAL ENGINEER ROBERT MATTHEW BROGAN No. 63854 Exp. 9/30/12 CIVIL STATE OF CALIFORNIA

THE STATE OF CALIFORNIA OR ITS OFFICERS OR AGENTS SHALL NOT BE RESPONSIBLE FOR THE ACCURACY OR COMPLETENESS OF SCANNED COPIES OF THIS PLAN SHEET.

MARK THOMAS & CO., INC.
7300 FOLSOM BLVD STE 203
SACRAMENTO, CA 95826

CITY OF CHICO
CAPITAL PROJECT SERVICES
411 MAIN STREET
CHICO, CA 95927

NOTE:

1. FOR ALLOWABLE ALTERNATIVES FOR APC & AFES, SEE DRAINAGE DETAILS SHEETS.

DRAINAGE PLAN SHEET No.	DRAINAGE SYSTEM No. ⬡	DRAINAGE UNIT ◯	REMOVE PIPE (N)	REMOVE FES	DI	HMA OD (N)	FRAME & GRATE (N) 24-12X	MISC IRON AND STEEL	MODIFY INLET TO MANHOLE	FES 18" AFES	FES 24" AFES	PIPES 18" APC	PIPES 24" APC	RSP (BACKING No. 2, METHOD B)	RSP (LIGHT, METHOD B)	ROCK SLOPE PROTECTION FABRIC	DESCRIPTION	STATION
			LF	EA	EA	SY	EA	LB	EA	EA	EA	LF	LF	CY	CY	SY		
D-2	1	a												4		15	RSP	"B" 129+44.90
		b									1						24" AFES	"B" 129+44.90
		c											115				24" APC	"B" 129+31.56 TO "B" 129+44.90
		d		1													REMOVE FES	"B" 129+39.72
		e	71														REMOVE 24" CMP	"B" 129+31.58 TO "B" 129+39.72
		f									1						24" AFES	"B" 129+31.58
		g		1													REMOVE FES	"B" 129+31.58
		h												4		15	RSP	"B" 129+31.58
D-3	2	a							1								MODIFY DI TO MH	"F2" 12+18.15
		b										6					18" APC	"F2" 12+12.52 TO "F2" 12+18.15
		c			1		1	239									DI (TYPE GO)	"F2" 12+10.67
D-3	3	a				2.39											HMA OD	"B" 139+07.07
		b												1		3	RSP	"B" 139+07.07
D-3	4	a				2.39											HMA OD	"B" 140+70.18
		b												1		3	RSP	"B" 140+70.18
D-3	5	a			1		1	239									DI (TYPE GI)	"B" 141+66.09
		b										14					18" APC	"B" 141+66.09
		c								1							18" AFES	"B" 141+66.09
		d												3		10	RSP	"B" 141+66.09
DD-2	6	a													456	506	RSP - SECTION A-A	"B" 142+02.39 TO "B" 142+83.22
DD-2		b													418	462	RSP - SECTION B-B	"B" 143+18.85 TO "B1" 143+99.69
TOTAL				2	2			478	1	1	2	20	115	13	874	1014		

(N) - NOT A SEPARATE PAY ITEM.
FOR INFORMATION ONLY.

DRAINAGE QUANTITIES
DQ-1

STATE OF CALIFORNIA - DEPARTMENT OF TRANSPORTATION
Caltrans
CONSULTANT FUNCTIONAL SUPERVISOR: ROBERT MATTHEW BROGAN
CALCULATED-DESIGNED BY: J. PANGBURN
CHECKED BY: M. BROGAN
REVISED BY
DATE REVISED

PATH: V:\Chico-55-0131-SR32 Widening\CADD\Drawing\ FILE NAME: sr32_DQ1-DQ2 PLOT DATE: Dec 20, 2011-09:04:44am CAD USER: amillar

LAST REVISION 00-00-00 DATE PLOTTED => $DATE TIME PLOTTED => $TIME

Dist	COUNTY	ROUTE	POST MILES TOTAL PROJECT	SHEET No.	TOTAL SHEETS
03	But	32	10.3/11.3	40	144

R.M. Brogan 12-22-11
REGISTERED CIVIL ENGINEER DATE

DECEMBER 22, 2011
PLANS APPROVAL DATE

REGISTERED PROFESSIONAL ENGINEER ROBERT MATTHEW BROGAN No. 63854 Exp. 9/30/12 CIVIL STATE OF CALIFORNIA

THE STATE OF CALIFORNIA OR ITS OFFICERS OR AGENTS SHALL NOT BE RESPONSIBLE FOR THE ACCURACY OR COMPLETENESS OF SCANNED COPIES OF THIS PLAN SHEET.

MARK THOMAS & CO., INC.
7300 FOLSOM BLVD STE 203
SACRAMENTO, CA 95826

CITY OF CHICO
CAPITAL PROJECT SERVICES
411 MAIN STREET
CHICO, CA 95927

NOTES:

1. FOR COMPLETE RIGHT OF WAY AND ACCURATE ACCESS DATA, SEE RIGHT OF WAY RECORD MAPS AT DISTRICT OFFICE.

2. WHERE GRADE CHANGES MUST OCCUR WITHIN THE DRIP LINE, A SUITABLE PLAN TO PROTECT THE TREE FROM EXCESS FILL AND/OR THE REMOVAL OF EXCESS SOIL FROM THE ROOT ZONE SHALL BE DEVELOPED BY A CERTIFIED ARBORIST.

3. PRIOR TO THE BEGINNING OF CONSTRUCTION, EXISTING TREES SHALL BE PRUNED TO REMOVE LIMBS WHICH MAY BE DEAD OR MAY BECOME DAMAGED DURING CONSTRUCTION. PRUNING SHALL BE PERFORMED CONSISTENT WITH ANSI A300 PRUNING STANDARDS, PRUNE TO THIN 1 IN.

4. UNDERGROUND FACILITIES AND TRENCHES, (e.g., UTILITY SERVICES, SANITARY SEWER, OR STORM DRAINAGE LINES) SHALL BE CONSOLIDATED, TO THE EXTENT FEASIBLE, AND LOCATED TO MINIMIZE IMPACTS UPON TREE ROOT SYSTEMS. ANY TRENCHING OR UNDERGROUND WORK SHOULD BE LOCATED OUTSIDE OF THE TREE DRIP LINE. ANY TRENCHING REQUIRED WITHIN THE TREE DRIP LINE SHALL BE AS FAR FROM THE TREE TRUNK AS POSSIBLE AND SHALL BE EXCAVATED BY HAND TO MINIMIZE IMPACT ON ROOTS. ALL TRENCHING WITHIN THE DRIP LINE SHALL BE SUPERVISED BY A CERTIFIED ARBORIST.

5. ROOTS 3/4 IN. OR GREATER IN SIZE ENCOUNTERED DURING TRENCHING SHALL BE CLEANLY CUT AND TREATED WITH A SEALING AGENT TO REDUCE LOSS OF MOISTURE TO THE TREE. ROOTS GREATER THAN 1-1/2 IN. SHALL BE PRESERVED AND PROTECTED AT THE DIRECTION OF A CERTIFIED ARBORIST.

6. TREES SCHEDULED FOR REMOVAL SHALL BE EXEMPT FROM PROTECTION REQUIREMENTS.

7. A TEMPORARY CONSTRUCTION FENCE SHALL BE INSTALLED AT THE DRIP LINE OR NO CLOSER THAN 20 FEET FROM THE TREE TRUNK, UNLESS APPROVED BY THE ENGINEER. THE FENCE SHALL BE SUBSTANTIAL ENOUGH TO RESTRICT ACTIVITY TO OUTSIDE THE AREA. FENCE SHALL BE INSTALLED PRIOR TO ANY GRADING OR OTHER CONSTRUCTION ACTIVITY. DURING CONSTRUCTION, MAINTENANCE SHALL BE PERFORMED SO THAT THE FENCE REMAINS IN GOOD REPAIR. REMOVAL OF THE FENCE SHALL BE PERFORMED SO THAT THE FENCE REMAINS IN GOOD REPAIR. REMOVAL OF THE FENCE SHALL OCCUR TO ALLOW REQUIRED CONSTRUCTION WITHIN THE AREA OR TO COMPLETE LANDSCAPING. THE ENGINEER SHALL BE NOTIFIED PRIOR TO COMMENCEMENT OF CONSTRUCTION TO INSPECT FENCING AND TO APPROVE ANY CONSTRUCTION WITHIN THE DRIP LINE. CONTRACTOR SHALL PLACE 4" WOOD CHIP MULCH WITHIN THE TEMPORARY CONSTRUCTION FENCE AREA, AT THE DIRECTION OF THE ENGINEER.

8. CONSTRUCTION VEHICLES, EQUIPMENT, OR MATERIALS SHALL NOT BE PARKED OR STORED WITHIN THE FENCED AREA. NO STAGING OR STORAGE AREA FOR CONSTRUCTION SHALL BE LOCATED CLOSER THAN 50 FEET FROM ANY TREE DRIP LINE.

9. ALL CONSTRUCTION WASTES, INCLUDING BUT NOT LIMITED TO, BUILDING MATERIAL DEBRIS, ROOFING MATERIALS, CLEANING OR CEMENT TRUCKS, CHEMICALS, ETC. SHALL BE STORED OR DISPOSED OF NO CLOSER THAN 50 FEET FROM ANY TREE DRIP LINE.

10. THE ROOT ZONES THAT ARE TO BE IMPACTED BY CONSTRUCTION, AND SPECIFICALLY THOSE THAT HAVE CUTS NEAR THEM THAT WILL REQUIRE ROOT PRUNING ARE TO BE PNEUMATICALLY EXCAVATED TO EXPOSE ROOTS AND THEN THE ROOTS ARE TO BE HAND PRUNED.

11. ROOT PRUNING SHALL BE TO LATERAL ROOTS IF THEY ARE WITHIN 6" OF THE CUT END. AFTER ROOT IS HAND PRUNED, THE SOIL FROM THE SITE SHALL BE PLACED OVER THE CUT ENDS AND WATERED TO SETTLE AROUND THE ROOTS. NO PAINTING OF THE ROOTS IS REQUIRED.

12. ROOTS ARE NOT TO BE STUB PRUNED OR GROUND, UNLESS THE TREE IS SLATED FOR REMOVAL.

13. ROOTS LESS THAN 2" IN DIAMETER ARE TO BE CLEAN CUT TO A PARENT ROOT OR ANOTHER LATERAL ROOT OUTSIDE THE WORK AREA.

14. ROOTS 2" IN DIAMETER OR LARGER SHALL NOT BE CUT WITHOUT THE SPECIFIC APPROVAL OF THE CERTIFIED ARBORIST. WHERE ROOTS GREATER THAN 2" IN DIAMETER MUST BE CUT, THEY ARE TO BE CLEAN CUT TO A PARENT ROOT OR ANOTHER LATERAL OUTSIDE OF THE WORK AREA.

15. ROOTS 2" IN DIAMETER AND LARGER EXPOSED TO THE AIR ARE TO BE KEPT COVERED AND MOIST AT ALL TIMES DURING THE CONSTRUCTION OPERATIONS.

16. ROOT PRUNING SHALL BE DONE BY THE CERTIFIED ARBORIST, CERTIFIED TREE WORKERS UNDER THE GENERAL GUIDANCE OF THE CERTIFIED ARBORIST OR THE CONTRACTOR UNDER THE DIRECT SUPERVISION OF THE CERTIFIED ARBORIST.

17. IF ROOTS 2" IN DIAMETER OR LARGER ARE ACCIDENTALLY DAMAGED, THE CONTRACTOR SHALL NOTIFY THE ENGINEER IMMEDIATELY. THE ENGINEER, IN CONSULTATION WITH THE URBAN FOREST MANAGER, WILL TAKE APPROPRIATE ACTION TO REPAIR OR MITIGATE THE DAMAGE. THE CONTRACTOR SHALL BE RESPONSIBLE FOR PAYING ALL COSTS INCURRED BY THE CITY TO REPAIR OR MITIGATE THE DAMAGE CAUSED AS A RESULT OF THE CONTRACTORS NEGLIGENCE.

LEGEND

⊕	REMOVE TREE
⊙	TREE TO REMAIN
24	TREE NUMBER
DBH	DIAMETER AT BREAST HEIGHT

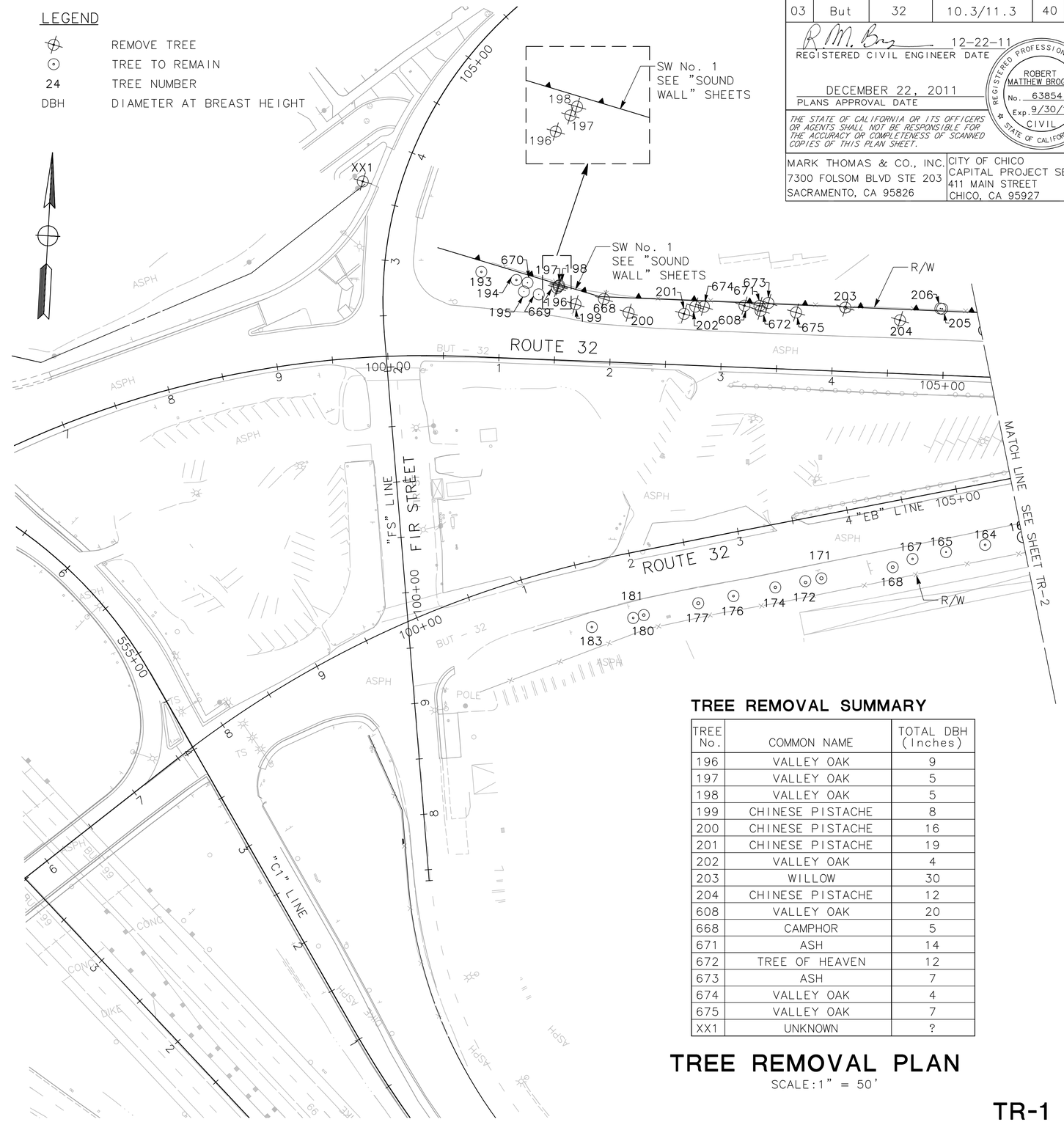

TREE REMOVAL SUMMARY

TREE No.	COMMON NAME	TOTAL DBH (Inches)
196	VALLEY OAK	9
197	VALLEY OAK	5
198	VALLEY OAK	5
199	CHINESE PISTACHE	8
200	CHINESE PISTACHE	16
201	CHINESE PISTACHE	19
202	VALLEY OAK	4
203	WILLOW	30
204	CHINESE PISTACHE	12
608	VALLEY OAK	20
668	CAMPHOR	5
671	ASH	14
672	TREE OF HEAVEN	12
673	ASH	7
674	VALLEY OAK	4
675	VALLEY OAK	7
XX1	UNKNOWN	?

TREE REMOVAL PLAN

SCALE: 1" = 50'

TR-1

STATE OF CALIFORNIA - DEPARTMENT OF TRANSPORTATION
Caltrans

CONSULTANT FUNCTIONAL SUPERVISOR: ROBERT MATTHEW BROGAN
CALCULATED-DESIGNED BY: J. PANGBURN
CHECKED BY: M. BROGAN
REVISED BY
DATE REVISED

PATH: V:\Chico-55-0131-SR32 Widening\CADD\Drawing\ FILE NAME: sr32_TR1-TR5 PLOT DATE: Dec 20, 2011-08:35:22am CAD USER: amillar

LAST REVISION 00-00-00 | DATE PLOTTED => $DATE | TIME PLOTTED => $TIME

BORDER LAST REVISED 7/2/2010 | USERNAME => $USER | DGN FILE => $REQUEST | RELATIVE BORDER SCALE IS IN INCHES 0 1 2 3 | UNIT 0000 | PROJECT NUMBER & PHASE 0300000261

Dist	COUNTY	ROUTE	POST MILES TOTAL PROJECT	SHEET No.	TOTAL SHEETS
03	But	32	10.3/11.3	41	144

R.M. Brogan 12-22-11
REGISTERED CIVIL ENGINEER DATE

DECEMBER 22, 2011
PLANS APPROVAL DATE

REGISTERED PROFESSIONAL ENGINEER
ROBERT MATTHEW BROGAN
No. 63854
Exp. 9/30/12
CIVIL
STATE OF CALIFORNIA

THE STATE OF CALIFORNIA OR ITS OFFICERS OR AGENTS SHALL NOT BE RESPONSIBLE FOR THE ACCURACY OR COMPLETENESS OF SCANNED COPIES OF THIS PLAN SHEET.

MARK THOMAS & CO., INC.
7300 FOLSOM BLVD STE 203
SACRAMENTO, CA 95826

CITY OF CHICO
CAPITAL PROJECT SERVICES
411 MAIN STREET
CHICO, CA 95927

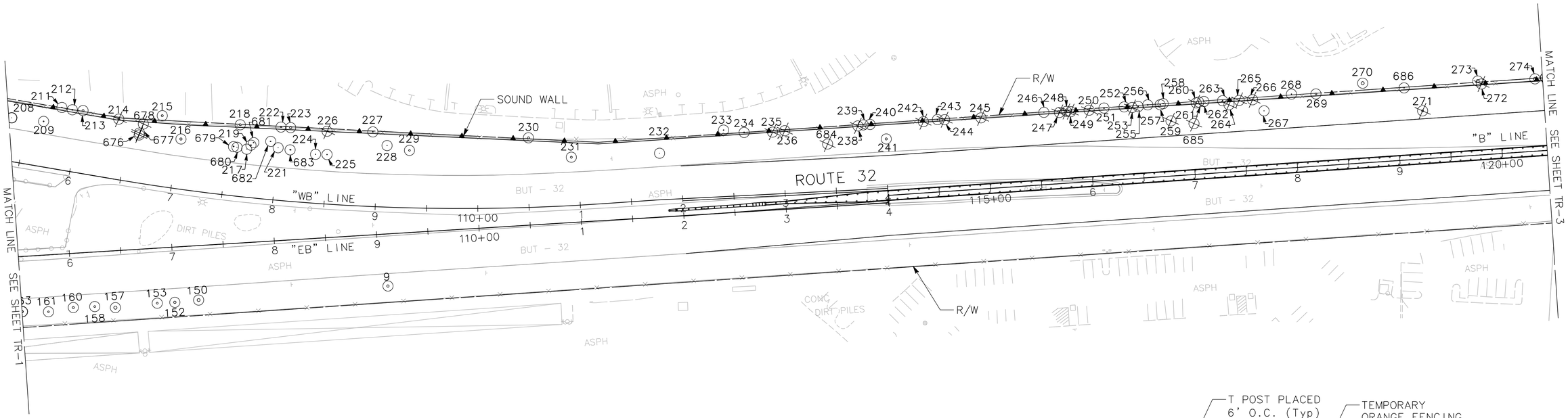

TREE REMOVAL SUMMARY

TREE No.	COMMON NAME	TOTAL DBH (Inches)
214	VALLEY OAK	15
226	VALLEY OAK	12
235	VALLEY OAK	7
236	INTERIOR LIVE OAK	3
238	VALLEY OAK	13
242	VALLEY OAK	13
244	VALLEY OAK	8
245	VALLEY OAK	9
247	VALLEY OAK	16
248	VALLEY OAK	9
249	VALLEY OAK	11
250	VALLEY OAK	10
253	VALLEY OAK	10
259	CHINESE PISTACHE	18

TREE No.	COMMON NAME	TOTAL DBH (Inches)
260	VALLEY OAK	8
264	VALLEY OAK	4
265	VALLEY OAK	10
266	VALLEY OAK	11
271	CHINESE PISTACHE	24
272	VALLEY OAK	12
676	CAMPHOR	5
677	CAMPHOR	8
678	CAMPHOR	13
684	VALLEY OAK	4
685	VALLEY OAK	6

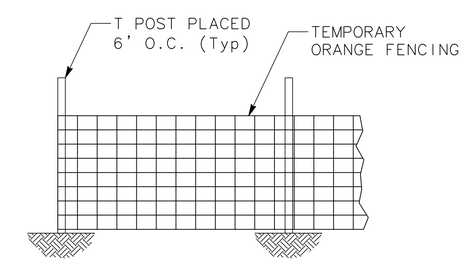

1 / TR-2 **CONSTRUCTION FENCE DETAIL**
NO SCALE

TREE REMOVAL PLAN
SCALE: 1" = 50'

TR-2

STATE OF CALIFORNIA - DEPARTMENT OF TRANSPORTATION
Caltrans

CONSULTANT FUNCTIONAL SUPERVISOR: ROBERT MATTHEW BROGAN
CALCULATED-DESIGNED BY: J. PANGBURN
CHECKED BY: M. BROGAN
REVISED BY
DATE REVISED

PATH: V:\Chico-55-0131-SR32 Widening\CADD\Drawing\ FILE NAME: sr32_TR1-TR5 PLOT DATE: Dec 20, 2011-08:36:08am CAD USER: amillar

LAST REVISION 00-00-00 DATE PLOTTED => $DATE TIME PLOTTED => $TIME

BORDER LAST REVISED 7/2/2010 | USERNAME => $USER DGN FILE => $REQUEST | RELATIVE BORDER SCALE IS IN INCHES 0 1 2 3 | UNIT 0000 | PROJECT NUMBER & PHASE 0300000261

Dist	COUNTY	ROUTE	POST MILES TOTAL PROJECT	SHEET No.	TOTAL SHEETS
03	But	32	10.3/11.3	42	144

R.M. Brogan 12-22-11
REGISTERED CIVIL ENGINEER DATE

DECEMBER 22, 2011
PLANS APPROVAL DATE

REGISTERED PROFESSIONAL ENGINEER
ROBERT MATTHEW BROGAN
No. 63854
Exp. 9/30/12
CIVIL
STATE OF CALIFORNIA

THE STATE OF CALIFORNIA OR ITS OFFICERS OR AGENTS SHALL NOT BE RESPONSIBLE FOR THE ACCURACY OR COMPLETENESS OF SCANNED COPIES OF THIS PLAN SHEET.

MARK THOMAS & CO., INC.
7300 FOLSOM BLVD STE 203
SACRAMENTO, CA 95826

CITY OF CHICO
CAPITAL PROJECT SERVICES
411 MAIN STREET
CHICO, CA 95927

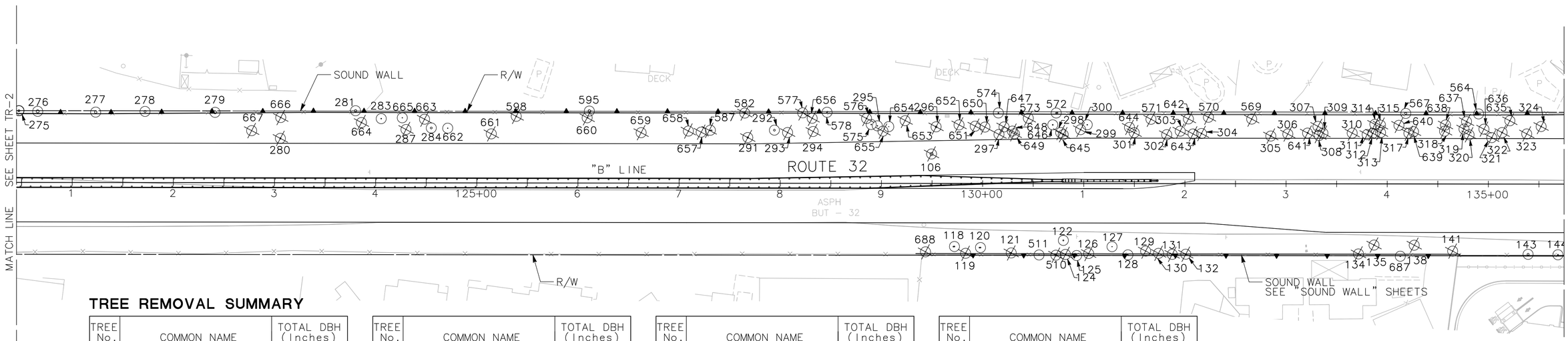

TREE REMOVAL SUMMARY

TREE No.	COMMON NAME	TOTAL DBH (Inches)
106	WALNUT	37
119	VALLEY OAK	9
121	CORK OAK	4
124	VALLEY OAK	11
126	VALLEY OAK	5
129	VALLEY OAK	2
130	VALLEY OAK	2
131	PLUM	6
132	VALLEY OAK	9
134	VALLEY OAK	3
135	VALLEY OAK	5
138	VALLEY OAK	4
141	VALLEY OAK	3
280	CHINESE PISTACHE	16
287	POPLAR	15
291	CHINESE PISTACHE	20
293	CORK OAK	8
294	VALLEY OAK	6
296	CHINESE PISTACHE	23
297	VALLEY OAK	4
298	VALLEY OAK	8

TREE No.	COMMON NAME	TOTAL DBH (Inches)
299	VALLEY OAK	8
301	INTERIOR LIVE OAK	4
302	VALLEY OAK	6
303	CHINESE PISTACHE	4
304	VALLEY OAK	12
305	VALLEY OAK	10
306	VALLEY OAK	4
307	APPLE	7
308	VALLEY OAK	5
309	APPLE	5
310	VALLEY OAK	7
311	VALLEY OAK	4
312	CORK OAK	9
313	VALLEY OAK	9
314	VALLEY OAK	4
315	VALLEY OAK	4
317	VALLEY OAK	5
318	VALLEY OAK	6
319	VALLEY OAK	4
320	VALLEY OAK	4
321	VALLEY OAK	4
322	VALLEY OAK	9

TREE No.	COMMON NAME	TOTAL DBH (Inches)
323	VALLEY OAK	5
324	VALLEY OAK	5
510	VALLEY OAK	24
569	TREE OF HEAVEN	10
570	CHINESE TALLOW	12
571	VALLEY OAK	6
573	VALLEY OAK	10
576	VALLEY OAK	11
577	VALLEY OAK	6
582	VALLEY OAK	26
587	WHITE ALDER	31
598	CAMPHOR	8
635	PRIVET	6
636	VALLEY OAK	5
637	VALLEY OAK	6
638	VALLEY OAK	6
639	VALLEY OAK	6
640	VALLEY OAK	9
641	BRADFORD PEAR	20
642	HICKORY	6
643	VALLEY OAK	4

TREE No.	COMMON NAME	TOTAL DBH (Inches)
644	VALLEY OAK	6
645	VALLEY OAK	12
647	CORK OAK	7
648	VALLEY OAK	4
649	VALLEY OAK	6
650	VALLEY OAK	5
651	VALLEY OAK	6
652	VALLEY OAK	5
653	CHINESE PISTACHE	5
655	VALLEY OAK	4
656	VALLEY OAK	7
657	VALLEY OAK	4
658	CORK OAK	8
659	HICKORY	7
660	PRIVET	21
661	CAMPHOR	5
663	CAMPHOR	6
664	COTTONWOOD	11
666	PRIVET	6
667	VALLEY OAK	5
688	VALLEY OAK	6

TREE REMOVAL PLAN

SCALE: 1" = 50'

TR-3

STATE OF CALIFORNIA – DEPARTMENT OF TRANSPORTATION
Caltrans

CONSULTANT FUNCTIONAL SUPERVISOR: ROBERT MATTHEW BROGAN
CALCULATED-DESIGNED BY: J. PANGBURN
CHECKED BY: M. BROGAN
REVISED BY
DATE REVISED

PATH: V:\Chico-55-0131-SR32 Widening\CADD\Drawing\ FILE NAME: sr32_TR1-TR5 PLOT DATE: Dec 20, 2011-08:36:35am CAD USER: amillar

LAST REVISION 00-00-00
DATE PLOTTED => $DATE
TIME PLOTTED => $TIME

BORDER LAST REVISED 7/2/2010
USERNAME => $USER
DGN FILE => $REQUEST
RELATIVE BORDER SCALE IS IN INCHES 0 1 2 3
UNIT 0000
PROJECT NUMBER & PHASE 0300000261

Dist	COUNTY	ROUTE	POST MILES TOTAL PROJECT	SHEET No.	TOTAL SHEETS
03	But	32	10.3/11.3	43	144

R.M. Brogan 12-22-11
REGISTERED CIVIL ENGINEER DATE

DECEMBER 22, 2011
PLANS APPROVAL DATE

REGISTERED PROFESSIONAL ENGINEER
ROBERT MATTHEW BROGAN
No. 63854
Exp. 9/30/12
CIVIL
STATE OF CALIFORNIA

THE STATE OF CALIFORNIA OR ITS OFFICERS OR AGENTS SHALL NOT BE RESPONSIBLE FOR THE ACCURACY OR COMPLETENESS OF SCANNED COPIES OF THIS PLAN SHEET.

MARK THOMAS & CO., INC.
7300 FOLSOM BLVD STE 203
SACRAMENTO, CA 95826

CITY OF CHICO
CAPITAL PROJECT SERVICES
411 MAIN STREET
CHICO, CA 95927

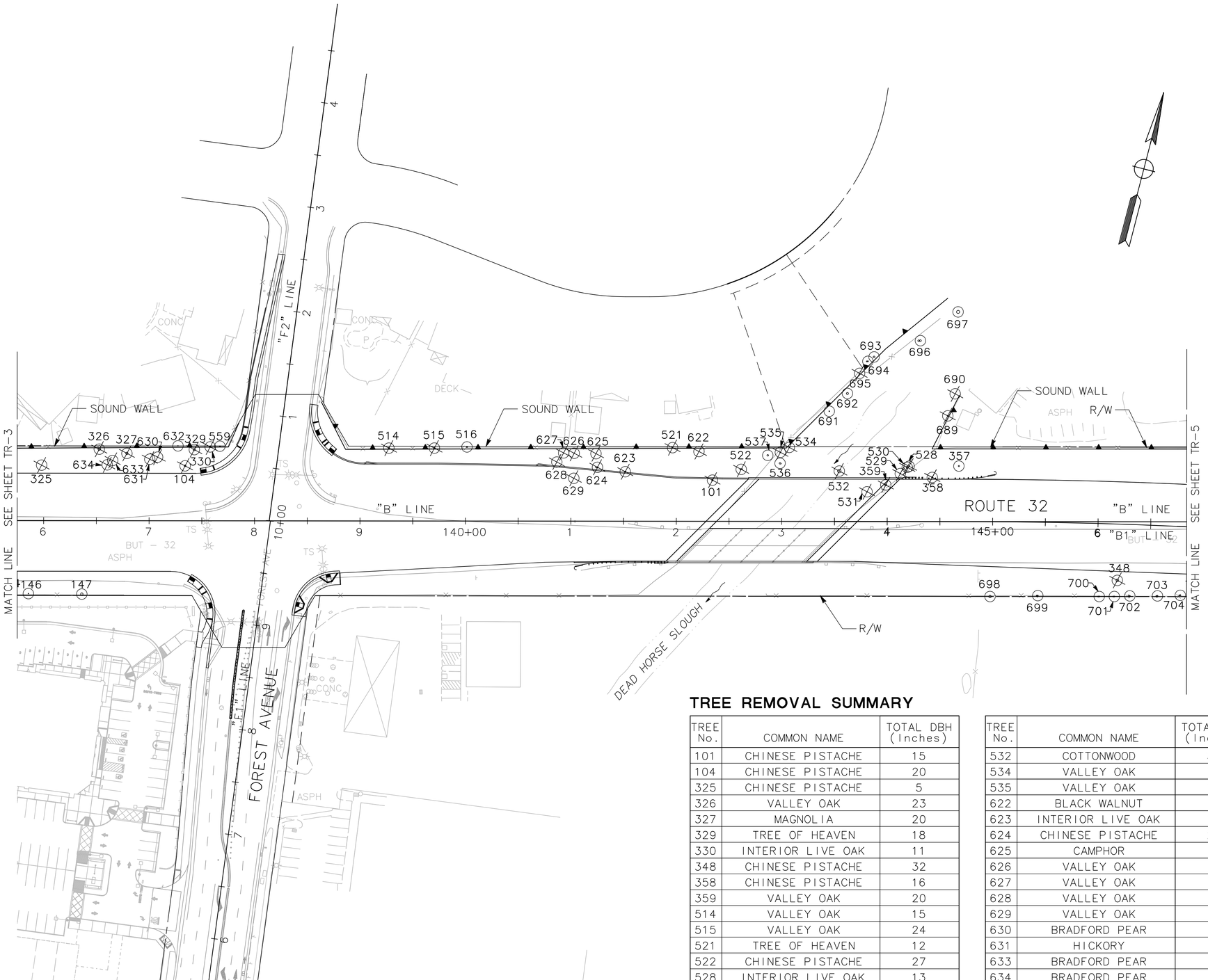

TREE REMOVAL SUMMARY

TREE No.	COMMON NAME	TOTAL DBH (Inches)
101	CHINESE PISTACHE	15
104	CHINESE PISTACHE	20
325	CHINESE PISTACHE	5
326	VALLEY OAK	23
327	MAGNOLIA	20
329	TREE OF HEAVEN	18
330	INTERIOR LIVE OAK	11
348	CHINESE PISTACHE	32
358	CHINESE PISTACHE	16
359	VALLEY OAK	20
514	VALLEY OAK	15
515	VALLEY OAK	24
521	TREE OF HEAVEN	12
522	CHINESE PISTACHE	27
528	INTERIOR LIVE OAK	13
529	INTERIOR LIVE OAK	6
530	VALLEY OAK	24
531	INTERIOR LIVE OAK	11

TREE No.	COMMON NAME	TOTAL DBH (Inches)
532	COTTONWOOD	50
534	VALLEY OAK	11
535	VALLEY OAK	16
622	BLACK WALNUT	6
623	INTERIOR LIVE OAK	16
624	CHINESE PISTACHE	29
625	CAMPHOR	6
626	VALLEY OAK	5
627	VALLEY OAK	5
628	VALLEY OAK	5
629	VALLEY OAK	7
630	BRADFORD PEAR	7
631	HICKORY	5
633	BRADFORD PEAR	4
634	BRADFORD PEAR	6
689	VALLEY OAK	12
690	VALLEY OAK	6
695	VALLEY OAK	8

TREE REMOVAL PLAN

SCALE: 1" = 50'

TR-4

STATE OF CALIFORNIA – DEPARTMENT OF TRANSPORTATION
Caltrans®

CONSULTANT FUNCTIONAL SUPERVISOR: ROBERT MATTHEW BROGAN
CHECKED BY: M. BROGAN
CALCULATED-DESIGNED BY: J. PANGBURN
REVISED BY
DATE REVISED

PATH: V:\Chico-55-0131-SR32 Widening\CADD\Drawing\
FILE NAME: sr32_TR1-TR5
PLOT DATE: Dec 20, 2011-10:26:33am
CAD USER: amillar

LAST REVISION 00-00-00
DATE PLOTTED => $DATE
TIME PLOTTED => $TIME

BORDER LAST REVISED 7/2/2010
USERNAME => $USER
DGN FILE => $REQUEST
RELATIVE BORDER SCALE IS IN INCHES 0 1 2 3
UNIT 0000
PROJECT NUMBER & PHASE 0300000261

Dist	COUNTY	ROUTE	POST MILES TOTAL PROJECT	SHEET No.	TOTAL SHEETS
03	But	32	10.3/11.3	44	144

R.M. Brogan 12-22-11
REGISTERED CIVIL ENGINEER DATE

DECEMBER 22, 2011
PLANS APPROVAL DATE

REGISTERED PROFESSIONAL ENGINEER
ROBERT MATTHEW BROGAN
No. 63854
Exp. 9/30/12
CIVIL
STATE OF CALIFORNIA

THE STATE OF CALIFORNIA OR ITS OFFICERS OR AGENTS SHALL NOT BE RESPONSIBLE FOR THE ACCURACY OR COMPLETENESS OF SCANNED COPIES OF THIS PLAN SHEET.

MARK THOMAS & CO., INC.
7300 FOLSOM BLVD STE 203
SACRAMENTO, CA 95826

CITY OF CHICO
CAPITAL PROJECT SERVICES
411 MAIN STREET
CHICO, CA 95927

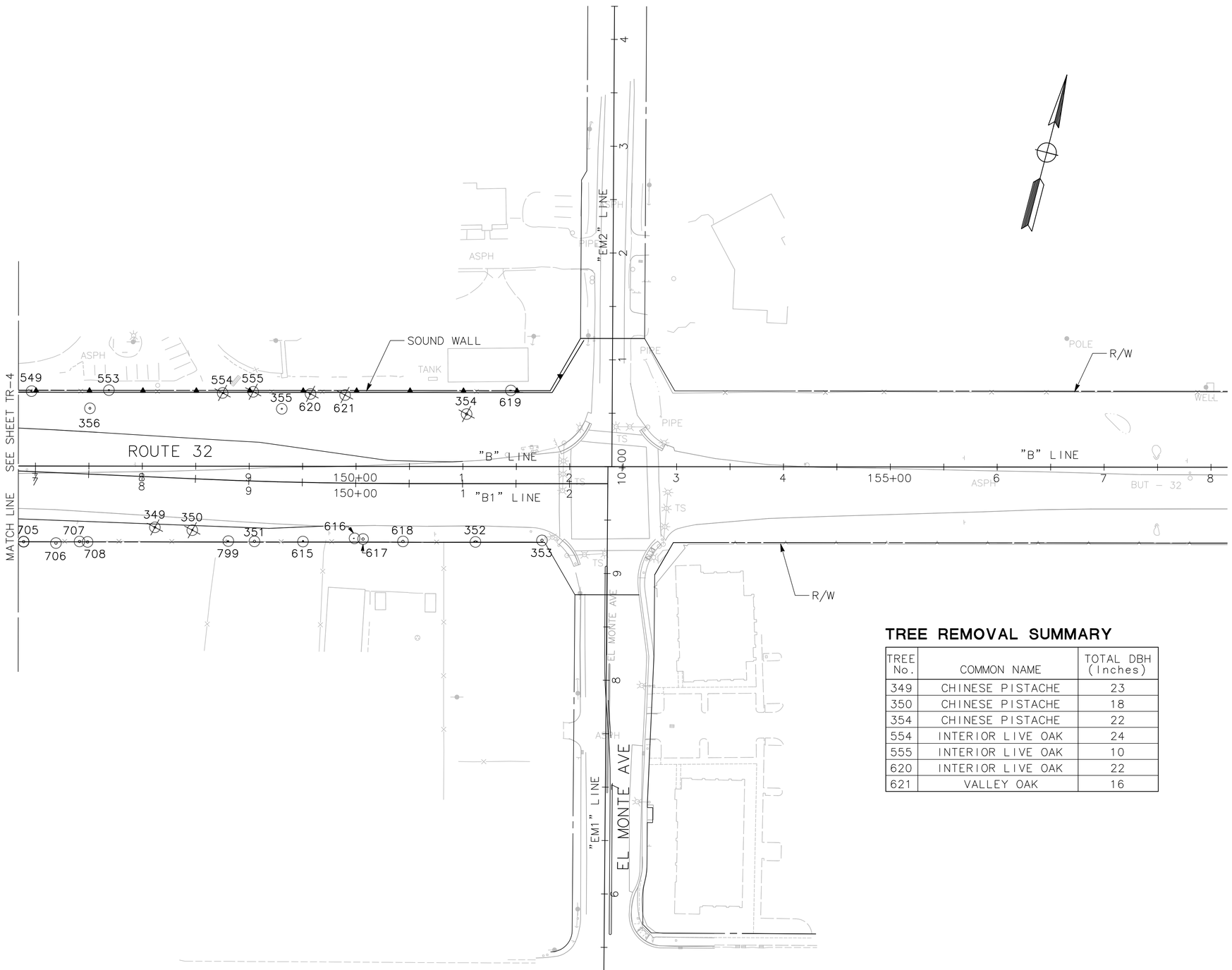

TREE REMOVAL SUMMARY

TREE No.	COMMON NAME	TOTAL DBH (Inches)
349	CHINESE PISTACHE	23
350	CHINESE PISTACHE	18
354	CHINESE PISTACHE	22
554	INTERIOR LIVE OAK	24
555	INTERIOR LIVE OAK	10
620	INTERIOR LIVE OAK	22
621	VALLEY OAK	16

TREE REMOVAL PLAN

SCALE: 1" = 50'

TR-5

STATE OF CALIFORNIA - DEPARTMENT OF TRANSPORTATION
Caltrans

CONSULTANT FUNCTIONAL SUPERVISOR: ROBERT MATTHEW BROGAN
CALCULATED-DESIGNED BY: J. PANGBURN
CHECKED BY: M. BROGAN
REVISED BY
DATE REVISED

PATH: V:\Chico-55-0131-SR32 Widening\CADD\Drawing\ FILE NAME: sr32_TR1-TR5 PLOT DATE: Dec 20, 2011-08:36:59am CAD USER: amillar

LAST REVISION 00-00-00 | DATE PLOTTED => $DATE | TIME PLOTTED => $TIME

BORDER LAST REVISED 7/2/2010 | USERNAME => $USER | DGN FILE => $REQUEST | RELATIVE BORDER SCALE IS IN INCHES 0 1 2 3 | UNIT 0000 | PROJECT NUMBER & PHASE 0300000261

Dist	COUNTY	ROUTE	POST MILES TOTAL PROJECT	SHEET No.	TOTAL SHEETS
03	But	32	10.3/11.3	45	144

R.M. Brogan 12-22-11
REGISTERED CIVIL ENGINEER DATE

DECEMBER 22, 2011
PLANS APPROVAL DATE

REGISTERED PROFESSIONAL ENGINEER ROBERT MATTHEW BROGAN No. 63854 Exp. 9/30/12 CIVIL STATE OF CALIFORNIA

THE STATE OF CALIFORNIA OR ITS OFFICERS OR AGENTS SHALL NOT BE RESPONSIBLE FOR THE ACCURACY OR COMPLETENESS OF SCANNED COPIES OF THIS PLAN SHEET.

MARK THOMAS & CO., INC.
7300 FOLSOM BLVD STE 203
SACRAMENTO, CA 95826

CITY OF CHICO
CAPITAL PROJECT SERVICES
411 MAIN STREET
CHICO, CA 95927

NOTES:

1. FOR ACCURATE RIGHT OF WAY DATA, CONTACT RIGHT OF WAY ENGINEERING AT THE DISTRICT OFFICE.
2. ELEVATIONS SHOWN REFERE TO THE TOP OF PIPE OR CONDUIT, UNLESS OTHERWISE STATED.
3. UTILITY OWNERSHIP ON THIS PROJECT OR AS SHOWN:

   GAS – PACIFIC GAS & ELECTRIC (PG&E)
   ELECTRICAL – PACIFIC GAS & ELECTRIC (PG&E)
   WATER – CALIFORNIA WATER SERVICE (CWS)
   SEWER – CITY OF CHICO (C.O.C)
   STORM DRAIN – CITY OF CHICO (C.O.C)
   TELEPHONE – AMERICAN TELEPHONE AND TELEGRAPH (AT&T)
   CABLE TV – COMCAST

4. LOCATIONS AND DEPTHS OF EXISTING CITY OWNED FACILITIES SHOWN ON THESE PLANS ARE APPROXIMATE. THE CONTRACTOR SHALL VERIFY THE EXISTENCE, LOCATION AND DEPTH OF ALL CITY OWNED FACILITIES PRIOR TO CONSTRUCTION. THE CITY OF CHICO IS NOT A MEMBER OF UNDERGROUND SERVICE ALERT (USA). THE CONTRACTOR SHALL CALL THE CITY OF CHICO AT (530) 894-4200 AND REQUEST MARKING OF CITY OWNED FACILITIES AT LEAST 72 HOURS (3 WORKING DAYS) PRIOR TO CONSTRUCTION.
5. LOCATIONS OF UTILITY FACILITIES (NON-CITY) SHOWN ON THESE PLANS ARE APPROXIMATE AND SHALL BE VERIFIED BY THE CONTRACTOR BY CONTACTING THE REGIONAL NOTIFICATION CENTER (USA) AT LEAST 48 HOURS (2 WORKING DAYS) PRIOR TO CONSTRUCTION.

LEGEND: UTILITY SHEETS ONLY

e (oh)	ELECTRICAL OVERHEAD (AERIAL) – EXISTING
g g	GAS – EXISTING
s	SEWER – EXISTING
sd sd	STORM DRAIN – EXISTING
SD SD	STORM DRAIN – PROPOSED
w	WATER – EXISTING
t (oh)	AT&T – EXISTING
jt jt	JOINT UTILITY TRENCH
#	UTILITY LOCATION

ABBREVIATIONS: UTILITY SHEETS ONLY

CWS – CALIFORNIA WATER SERVICE
PG&E – PACIFIC GAS AND ELECTRIC
C.O.C. – CITY OF CHICO
CATV – CABLE TV (COMCAST)

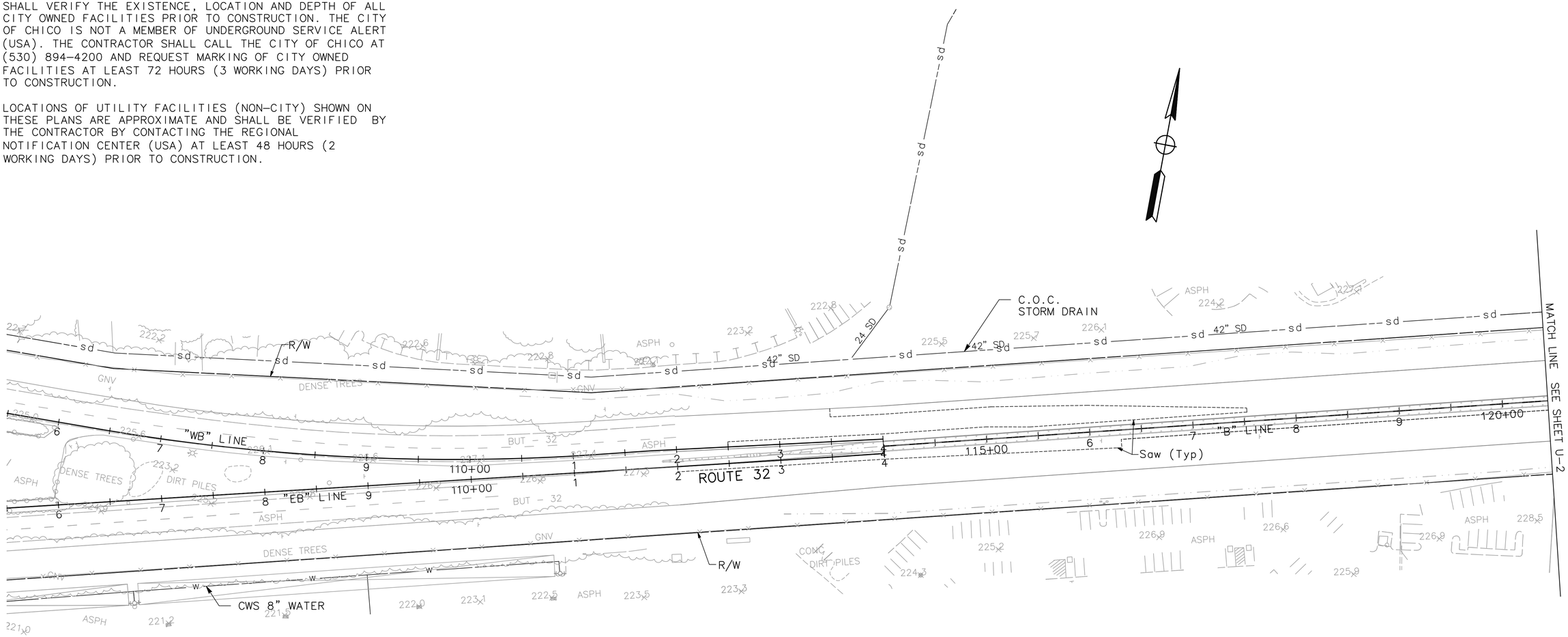

UTILITY PLAN

SCALE: 1" = 50'

U-1

THIS PLAN ACCURATE FOR UTILITIES ONLY

STATE OF CALIFORNIA – DEPARTMENT OF TRANSPORTATION
Caltrans

CONSULTANT FUNCTIONAL SUPERVISOR: ROBERT MATTHEW BROGAN
CALCULATED-DESIGNED BY: J. PANGBURN
CHECKED BY: M. BROGAN
REVISED BY
DATE REVISED

LAST REVISION 00-00-00
DATE PLOTTED => $DATE
TIME PLOTTED => $TIME

PATH: V:\Chico-55-0131-SR32 Widening\CADD\Drawing\
FILE NAME: sr32_U1-U4
PLOT DATE: Dec 20, 2011-09:05:46am
CAD USER: amillar

Dist	COUNTY	ROUTE	POST MILES TOTAL PROJECT	SHEET No.	TOTAL SHEETS
03	But	32	10.3/11.3	46	144

R.M. Brogan 12-22-11
REGISTERED CIVIL ENGINEER DATE

DECEMBER 22, 2011
PLANS APPROVAL DATE

REGISTERED PROFESSIONAL ENGINEER
ROBERT MATTHEW BROGAN
No. 63854
Exp. 9/30/12
CIVIL
STATE OF CALIFORNIA

THE STATE OF CALIFORNIA OR ITS OFFICERS OR AGENTS SHALL NOT BE RESPONSIBLE FOR THE ACCURACY OR COMPLETENESS OF SCANNED COPIES OF THIS PLAN SHEET.

MARK THOMAS & CO., INC.
7300 FOLSOM BLVD STE 203
SACRAMENTO, CA 95826

CITY OF CHICO
CAPITAL PROJECT SERVICES
411 MAIN STREET
CHICO, CA 95927

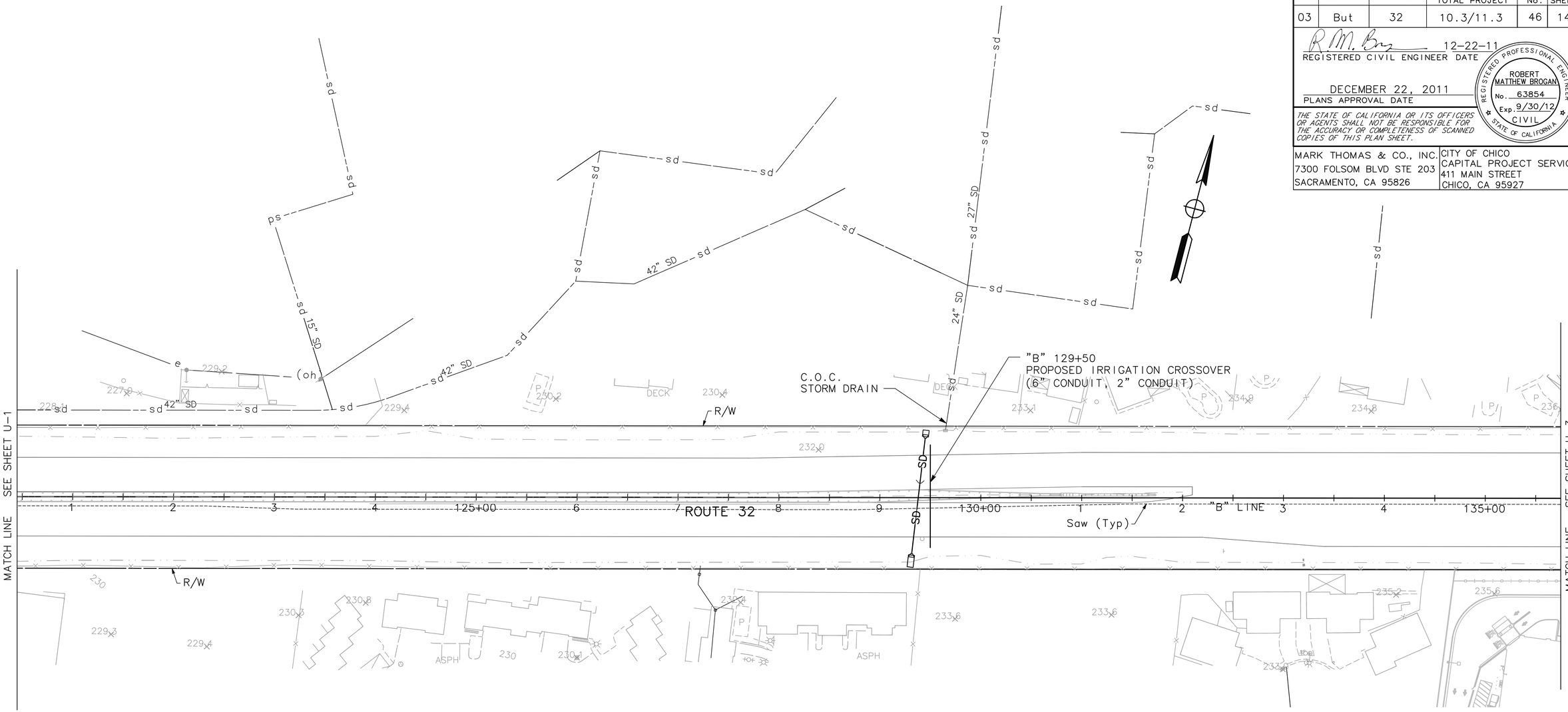

UTILITY PLAN

SCALE: 1" = 50'

U-2

THIS PLAN ACCURATE FOR UTILITIES ONLY

STATE OF CALIFORNIA - DEPARTMENT OF TRANSPORTATION
Caltrans

CONSULTANT FUNCTIONAL SUPERVISOR: ROBERT MATTHEW BROGAN
CALCULATED-DESIGNED BY: J. PANGBURN
CHECKED BY: M. BROGAN
REVISED BY
DATE REVISED

PATH: V:\Chico-55-0131-SR32 Widening\CADD\Drawing\ FILE NAME: sr32_U1-U4 PLOT DATE: Dec 20, 2011-09:06:05am CAD USER: amillar

LAST REVISION 00-00-00 | DATE PLOTTED => $DATE | TIME PLOTTED => $TIME

BORDER LAST REVISED 7/2/2010 | USERNAME => $USER | DGN FILE => $REQUEST | RELATIVE BORDER SCALE IS IN INCHES 0 1 2 3 | UNIT 0000 | PROJECT NUMBER & PHASE 0300000261

Dist	COUNTY	ROUTE	POST MILES TOTAL PROJECT	SHEET No.	TOTAL SHEETS
03	But	32	10.3/11.3	47	144

R.M. Brogan 12-22-11
REGISTERED CIVIL ENGINEER DATE

DECEMBER 22, 2011
PLANS APPROVAL DATE

REGISTERED PROFESSIONAL ENGINEER ROBERT MATTHEW BROGAN No. 63854 Exp. 9/30/12 CIVIL STATE OF CALIFORNIA

THE STATE OF CALIFORNIA OR ITS OFFICERS OR AGENTS SHALL NOT BE RESPONSIBLE FOR THE ACCURACY OR COMPLETENESS OF SCANNED COPIES OF THIS PLAN SHEET.

MARK THOMAS & CO., INC.
7300 FOLSOM BLVD STE 203
SACRAMENTO, CA 95826

CITY OF CHICO
CAPITAL PROJECT SERVICES
411 MAIN STREET
CHICO, CA 95927

NOTES:

1. SEE SHEET X-1 FOR ADDITIONAL NOTES.
2. EXTEND STEEL SLEEVES 1' MINIMUM BELOW GRADE.

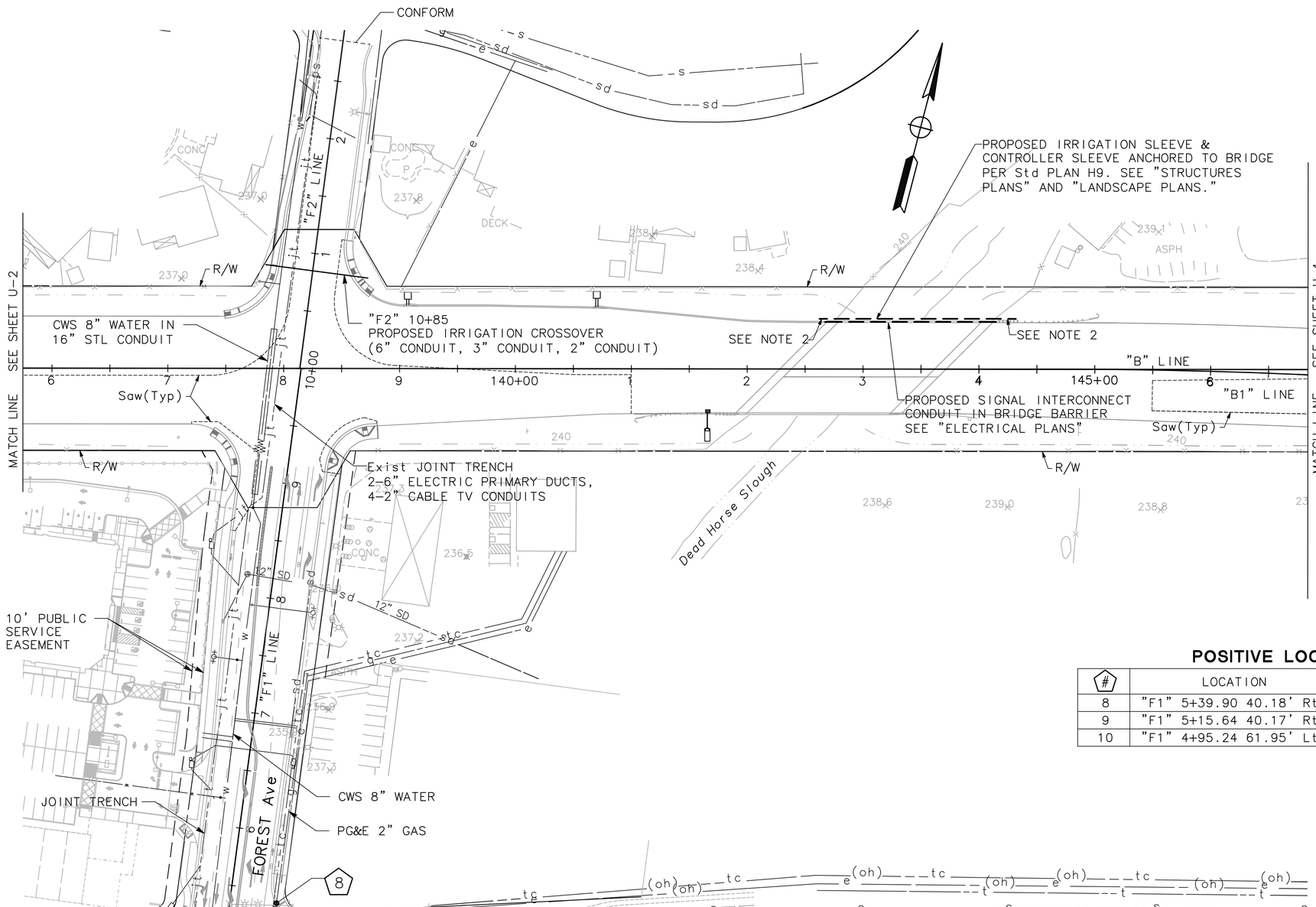

POSITIVE LOCATION INFORMATION

#	LOCATION	ELEVATION	METHOD
8	"F1" 5+39.90 40.18' Rt	235.31	ELECTRONIC PROBE
9	"F1" 5+15.64 40.17' Rt	235.07	ELECTRONIC PROBE
10	"F1" 4+95.24 61.95' Lt	233.80	ELECTRONIC PROBE

THIS PLAN ACCURATE FOR UTILITIES ONLY

UTILITY PLAN

SCALE: 1" = 50'

U-3

STATE OF CALIFORNIA - DEPARTMENT OF TRANSPORTATION
Caltrans

CONSULTANT FUNCTIONAL SUPERVISOR: ROBERT MATTHEW BROGAN

CALCULATED-DESIGNED BY: J. PANGBURN
CHECKED BY: M. BROGAN
REVISED BY
DATE REVISED

PATH: V:\Chico-55-0131-SR32 Widening\CADD\Drawing\ FILE NAME: sr32_U1-U4 PLOT DATE: Dec 20, 2011-10:28:08am CAD USER: amillar

LAST REVISION 00-00-00 DATE PLOTTED => $DATE TIME PLOTTED => $TIME

BORDER LAST REVISED 7/2/2010 | USERNAME => $USER DGN FILE => $REQUEST | RELATIVE BORDER SCALE IS IN INCHES 0 1 2 3 | UNIT 0000 | PROJECT NUMBER & PHASE 0300000261

Dist	COUNTY	ROUTE	POST MILES TOTAL PROJECT	SHEET No.	TOTAL SHEETS
03	But	32	10.3/11.3	48	144

R.M. Brogan 12-22-11
REGISTERED CIVIL ENGINEER DATE

DECEMBER 22, 2011
PLANS APPROVAL DATE

REGISTERED PROFESSIONAL ENGINEER
ROBERT MATTHEW BROGAN
No. 63854
Exp. 9/30/12
CIVIL
STATE OF CALIFORNIA

THE STATE OF CALIFORNIA OR ITS OFFICERS OR AGENTS SHALL NOT BE RESPONSIBLE FOR THE ACCURACY OR COMPLETENESS OF SCANNED COPIES OF THIS PLAN SHEET.

MARK THOMAS & CO., INC.
7300 FOLSOM BLVD STE 203
SACRAMENTO, CA 95826

CITY OF CHICO
CAPITAL PROJECT SERVICES
411 MAIN STREET
CHICO, CA 95927

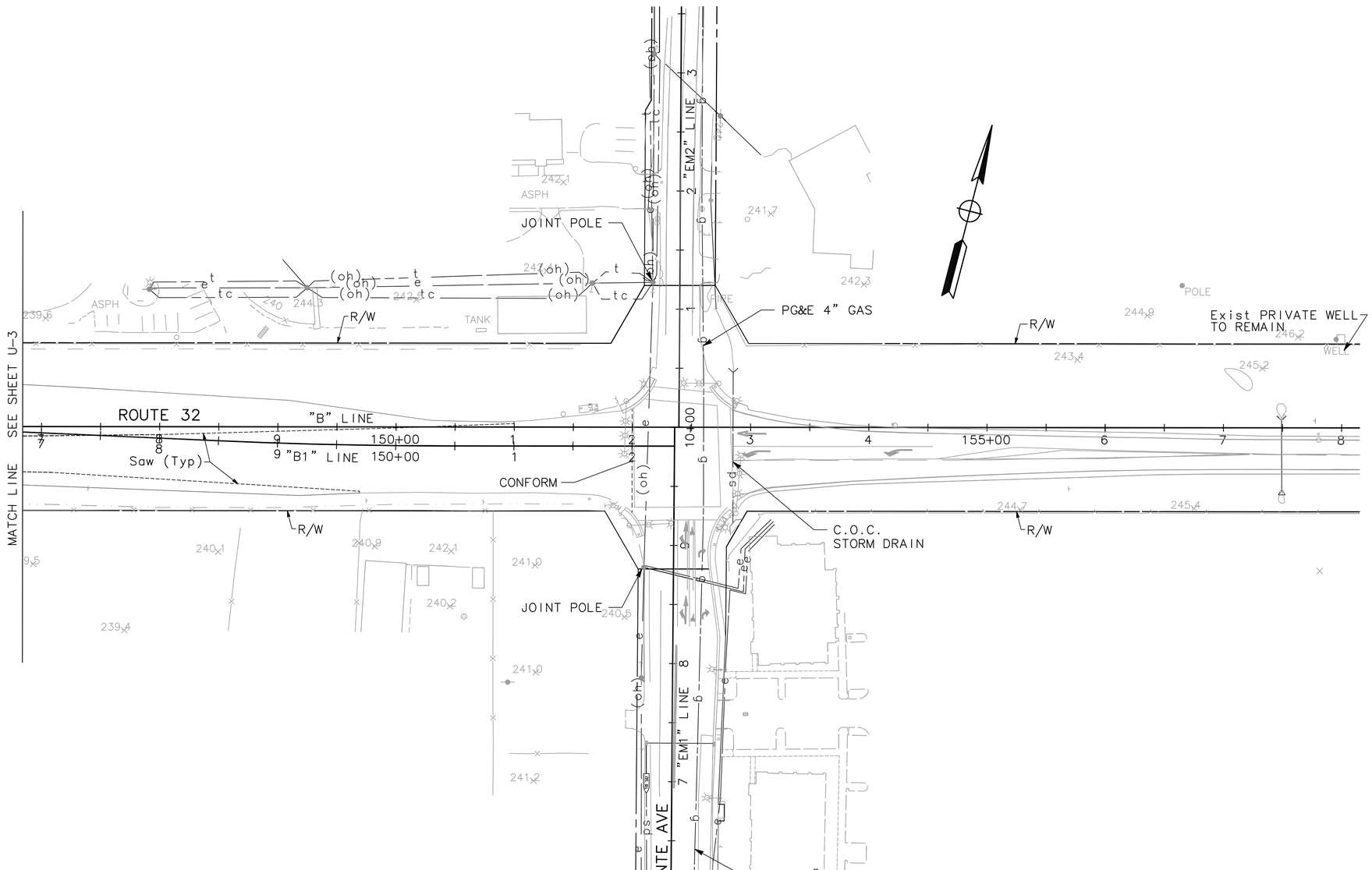

THIS PLAN ACCURATE FOR UTILITIES ONLY

UTILITY PLAN

SCALE: 1" = 50'

U-4

STATE OF CALIFORNIA - DEPARTMENT OF TRANSPORTATION
Caltrans

CONSULTANT FUNCTIONAL SUPERVISOR: ROBERT MATTHEW BROGAN

CALCULATED-DESIGNED BY: J. PANGBURN
CHECKED BY: M. BROGAN

REVISED BY
DATE REVISED

PATH: V:\Chico-55-0131-SR32 Widening\CADD\Drawing\ FILE NAME: sr32_U1-U4 PLOT DATE: Dec 20, 2011-09:06:32am CAD USER: amillar

LAST REVISION 00-00-00 | DATE PLOTTED => $DATE | TIME PLOTTED => $TIME

BORDER LAST REVISED 7/2/2010 | USERNAME => $USER | DGN FILE => $REQUEST | RELATIVE BORDER SCALE IS IN INCHES 0 1 2 3 | UNIT 0000 | PROJECT NUMBER & PHASE 0300000261

Dist	COUNTY	ROUTE	POST MILES TOTAL PROJECT	SHEET No.	TOTAL SHEETS
03	But	32	10.3/11.3	49	144

R.M.Br 12-22-11
REGISTERED CIVIL ENGINEER DATE

DECEMBER 22, 2011
PLANS APPROVAL DATE

REGISTERED PROFESSIONAL ENGINEER ROBERT MATTHEW BROGAN No. 63854 Exp. 9/30/12 CIVIL STATE OF CALIFORNIA

THE STATE OF CALIFORNIA OR ITS OFFICERS OR AGENTS SHALL NOT BE RESPONSIBLE FOR THE ACCURACY OR COMPLETENESS OF SCANNED COPIES OF THIS PLAN SHEET.

MARK THOMAS & CO., INC.
7300 FOLSOM BLVD STE 203
SACRAMENTO, CA 95826

CITY OF CHICO
CAPITAL PROJECT SERVICES
411 MAIN STREET
CHICO, CA 95927

LEGEND

CONSTRUCTION AREA SIGN SINGLE POST

PCMS–PORTABLE CHANGEAGLE MESSAGE SIGN

NOTES

1. LOCATION OF CONSTRUCTION AREA SIGNS SHOWN ARE APPROXIMATE. EXACT SIGN LOCATION TO BE DETERMINED BY THE ENGINEER.
2. SEE TH SHEETS FOR ADDITIONAL CONSTRUCTION AREA SIGNS.
3. TWO PORTABLE CHANGEABLE MESSAGE SIGNS TO BE LOCATED AS DIRECTED BY THE ENGINEER.

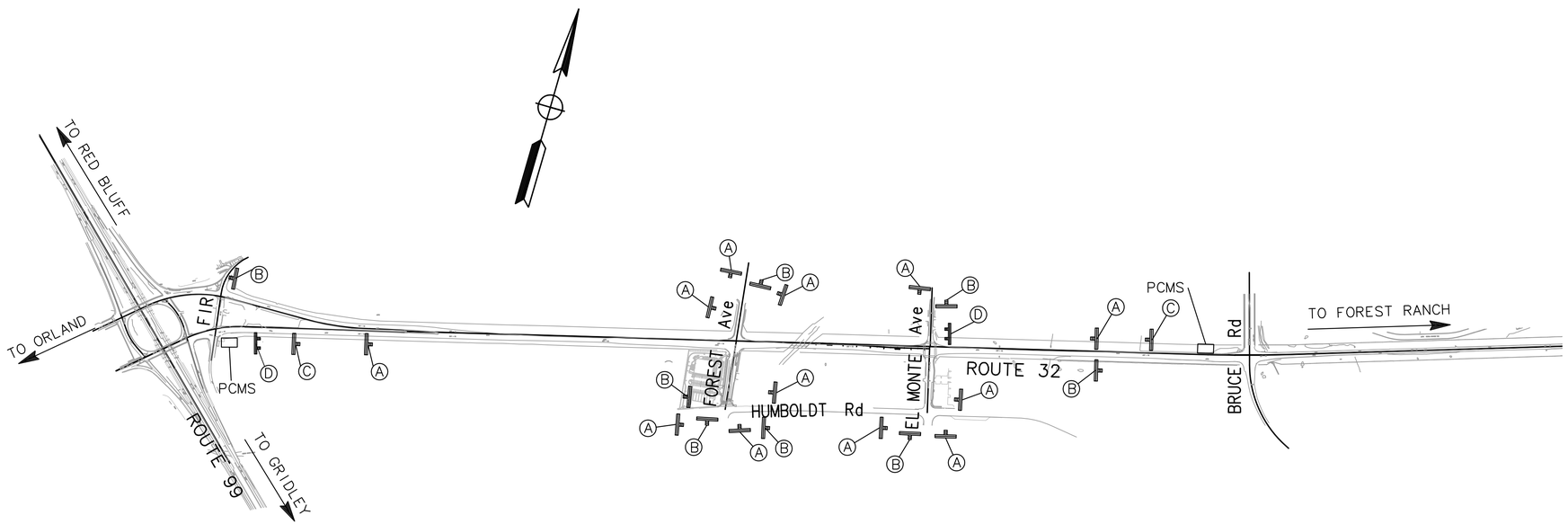

STATIONARY MOUNTED CONSTRUCTION AREA SIGNS

SIGN LETTER	SIGN CODE FEDERAL	SIGN CODE CALIFORNIA	PANEL SIZE (IN)	SIGN MESSAGE	No. OF POST & SIZE	No. OF SIGNS (EA)
A	W20-1	C23	48x48	ROAD WORK AHEAD	1-6"X6"	12
B	G20-2	C14	36x18	END ROAD WORK	1-4"X4"	8
C	---	C40(Mod)	48x36	TRAFFIC FINES DOUBLED IN WORK ZONES	1-4"X6"	2
D	PROP 1-B BOND-FUNDS SIGN				2-6"X8"	2
TOTAL						24

C40(Mod) <CA>

TRAFFIC FINES DOUBLED IN WORK ZONES

4" D

48"x36"
RETRO REFLECTIVE WHITE BACKGROUND WITH BLACK LEGEND AND BORDER.

CONSTRUCTION AREA SIGNS

SCALE: 1" = 200'

CS-1

STATE OF CALIFORNIA – DEPARTMENT OF TRANSPORTATION
Caltrans

CONSULTANT FUNCTIONAL SUPERVISOR: ROBERT MATTHEW BROGAN
CALCULATED-DESIGNED BY: J. PANGBURN
CHECKED BY: M. BROGAN
REVISED BY
DATE REVISED

PATH: V:\Chico-55-0131-SR32 Widening\CADD\Drawing\ FILE NAME: sr32_CS1 PLOT DATE: Dec 20, 2011-09:07:37am CAD USER: amillar

LAST REVISION 00-00-00 DATE PLOTTED => $DATE TIME PLOTTED => $TIME

BORDER LAST REVISED 7/2/2010 | USERNAME => $USER DGN FILE => $REQUEST | RELATIVE BORDER SCALE IS IN INCHES 0 1 2 3 | UNIT 0000 | PROJECT NUMBER & PHASE 0300000261

Dist	COUNTY	ROUTE	POST MILES TOTAL PROJECT	SHEET No.	TOTAL SHEETS
03	But	32	10.3/11.3	50	144

R.M. Br 12-22-11
REGISTERED CIVIL ENGINEER DATE

DECEMBER 22, 2011
PLANS APPROVAL DATE

REGISTERED PROFESSIONAL ENGINEER ROBERT MATTHEW BROGAN No. 63854 Exp. 9/30/12 CIVIL STATE OF CALIFORNIA

THE STATE OF CALIFORNIA OR ITS OFFICERS OR AGENTS SHALL NOT BE RESPONSIBLE FOR THE ACCURACY OR COMPLETENESS OF SCANNED COPIES OF THIS PLAN SHEET.

MARK THOMAS & CO., INC.
7300 FOLSOM BLVD STE 203
SACRAMENTO, CA 95826

CITY OF CHICO
CAPITAL PROJECT SERVICES
411 MAIN STREET
CHICO, CA 95927

LEGEND:

- STAGE 1 ROADWAY CONSTRUCTION
- ROADWAY REHABILITATION WORK

CONSTRUCTION ACTIVITIES (STAGE 1):

1. REMOVE TREES PER TREE REMOVAL PLAN AND COMPLETE CLEAR AND GRUB OPERATIONS.
2. CONSTRUCT PRECAST CONCRETE SOUNDWALLS.
3. INSTALL TEMPORARY SIGNALS AT FOREST AVENUE
4. COMPLETE PAVEMENT REHABILITATION WORK.
5. CONSTRUCT WESTBOUND ROADWAY ALONG SR 32.
6. CONSTRUCT DEAD HORSE SLOUGH BRIDGE WIDENING.
7. MAINTAIN SIGNAL OPERATIONS AT EL MONTE AVENUE INTERSECTION.

TRAFFIC THIS STAGE:

1. MAINTAIN TRAFFIC WITH EXISTING SIGNAL OPERATIONS.
2. PLACE TEMPORARY RAILING (TYPE K), TEMPORARY PAVEMENT DELINEATION, CHANNELIZERS, ETC. PER TRAFFIC HANDLING PLANS.

NOTES:

1. REFER TO SPECIAL PROVISIONS FOR LIMITATIONS OF WORK PERIODS.
2. FOR ADDITIONAL CONSTRUCTION AREA SIGNS, SEE CONSTRUCTION AREA SIGN PLAN.
3. SEE ELECTRICAL SHEETS FOR TEMPORARY SIGNALS.
4. PAVEMENT REHABILITATION WORK SHALL BE PERFORMED WITH TEMPORARY LANE CLOSURES.
5. TEMPORARY RAILING (TYPE K) SHALL BE PINNED WHEN CLEARANCE FROM BACK OF RAILING TO WORKZONE IS LESS THAN 2'.
6. ANY WORK NOT IN CONFLICT CAN BE PERFORMED CONCURRENTLY.

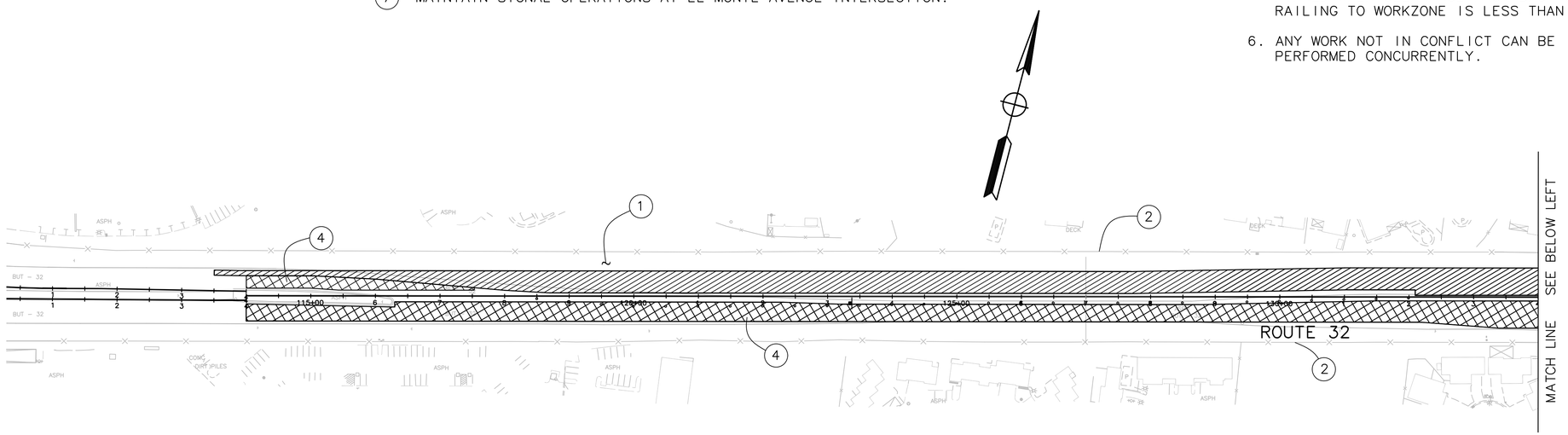

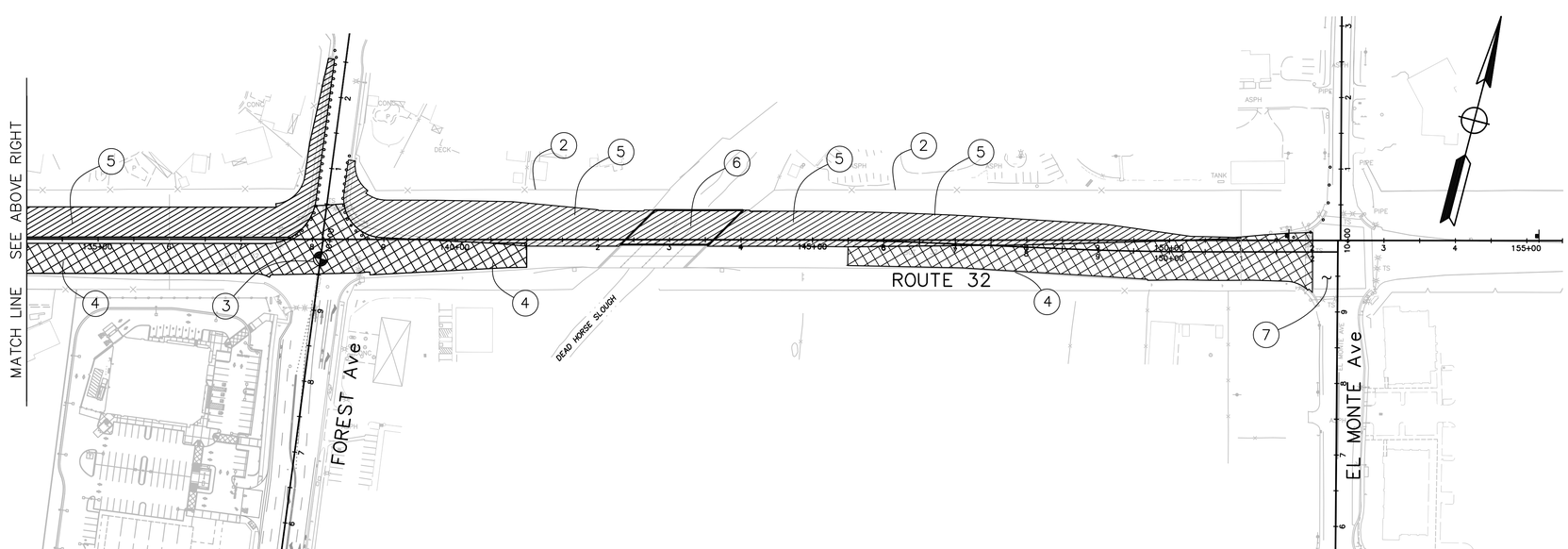

STAGE CONSTRUCTION

STAGE 1

SCALE: 1" = 100'

SC-1

STATE OF CALIFORNIA - DEPARTMENT OF TRANSPORTATION
Caltrans

CONSULTANT FUNCTIONAL SUPERVISOR: ROBERT MATTHEW BROGAN

CALCULATED-DESIGNED BY: J. PANGBURN
CHECKED BY: M. BROGAN
REVISED BY
DATE REVISED

LAST REVISION 00-00-00
DATE PLOTTED => $DATE
TIME PLOTTED => $TIME

PATH: V:\Chico-55-0131-SR32 Widening\CADD\Drawing\ FILE NAME: sr32_SC1 PLOT DATE: Dec 20, 2011-09:08:41am CAD USER: amillar

Dist	COUNTY	ROUTE	POST MILES TOTAL PROJECT	SHEET No.	TOTAL SHEETS
03	But	32	10.3/11.3	51	144

R.M. Brogan 12-22-11
REGISTERED CIVIL ENGINEER DATE

DECEMBER 22, 2011
PLANS APPROVAL DATE

REGISTERED PROFESSIONAL ENGINEER
ROBERT MATTHEW BROGAN
No. 63854
Exp. 9/30/12
CIVIL
STATE OF CALIFORNIA

THE STATE OF CALIFORNIA OR ITS OFFICERS OR AGENTS SHALL NOT BE RESPONSIBLE FOR THE ACCURACY OR COMPLETENESS OF SCANNED COPIES OF THIS PLAN SHEET.

MARK THOMAS & CO., INC.
7300 FOLSOM BLVD STE 203
SACRAMENTO, CA 95826

CITY OF CHICO
CAPITAL PROJECT SERVICES
411 MAIN STREET
CHICO, CA 95927

LEGEND:

STAGE 2 ROADWAY CONSTRUCTION

STAGE 2A

NOTES:

1. REFER TO SPECIAL PROVISIONS FOR LIMITATIONS OF WORK PERIODS.
2. FOR ADDITIONAL CONSTRUCTION AREA SIGNS, SEE CONSTRUCTION AREA SIGN PLAN.
3. CONTRACTOR TO MAINTAIN PEDESTRIAN ACCESS AT ALL TIMES.
4. ANY WORK NOT SHOWN IN CONFLICT CAN BE PERFORMED CONCURRENTLY.

CONSTRUCTION ACTIVITIES (STAGE 2):

1. CONSTRUCT EASTBOUND PAVEMENT ALONG SR 32.
2. CONSTRUCT SHOULDER, MEDIAN IMPROVEMENTS, & PLACE LANDSCAPING.
3. PLACE STEEL BACKED TIMBER GUARDRAIL.
4. REPLACE BRIDGE BARRIER/RAILING & APPROACH SLAB ON SOUTH SIDE OF BRIDGE.
5. CONSTRUCT CURB RETURNS ALONG SOUTH LEG OF FOREST AVENUE.
6. CONSTRUCT MEDIAN ALONG SOUTH LEG OF FOREST AVENUE.

CONSTRUCTION ACTIVITIES (STAGE 3) (NOT SHOWN BELOW):

7. PLACE FINAL LIFT HMA (TYPE A).
8. PLACE OGFC.
9. PLACE FINAL STRIPING/SIGNAGE.
10. REMOVE TEMPORARY PAVING.

TRAFFIC STAGE 2:

1. SHIFT WEST BOUND TRAFFIC TO ROADWAY CONSTRUCTED IN STAGE 1.
2. ACTIVATE TEMPORARY SIGNAL AT FOREST AVENUE.
3. USE FLAGGING AND ONE WAY TRAFFIC CONTROL AS NECESSARY TO CONSTRUCT PAVEMENT CONFORM FROM STATIONS "B1" 149+00 TO "B1" 152+00.

TRAFFIC STAGE 3:

1. SHIFT TRAFFIC TO FINAL PAVEMENT.
2. PERFORM FINAL LIFTS WITH MOVING LANE CLOSURES.
3. TEMPORARY RAILING (TYPE K) SHALL BE PINNED WHEN CLEARANCE FROM BACK OF RAILING TO WORKZONE IS LESS THAN 2'.

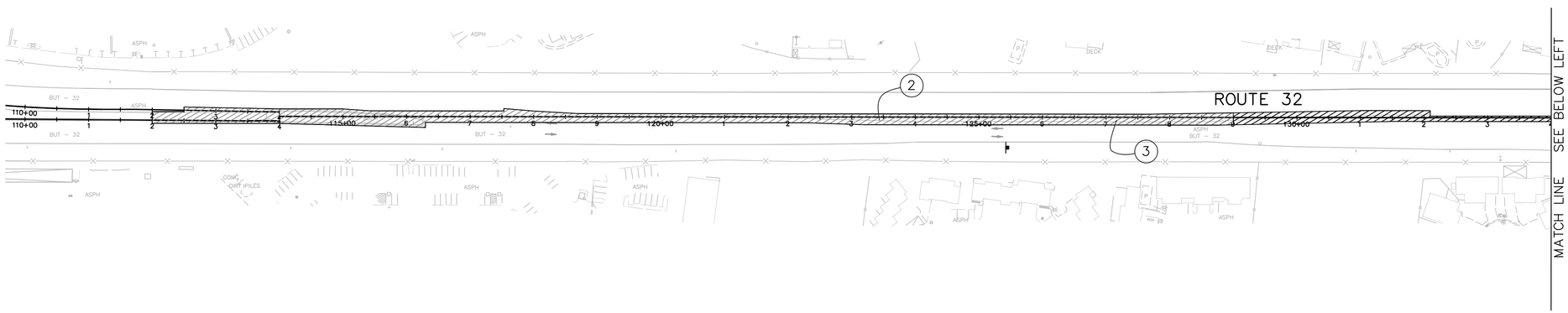

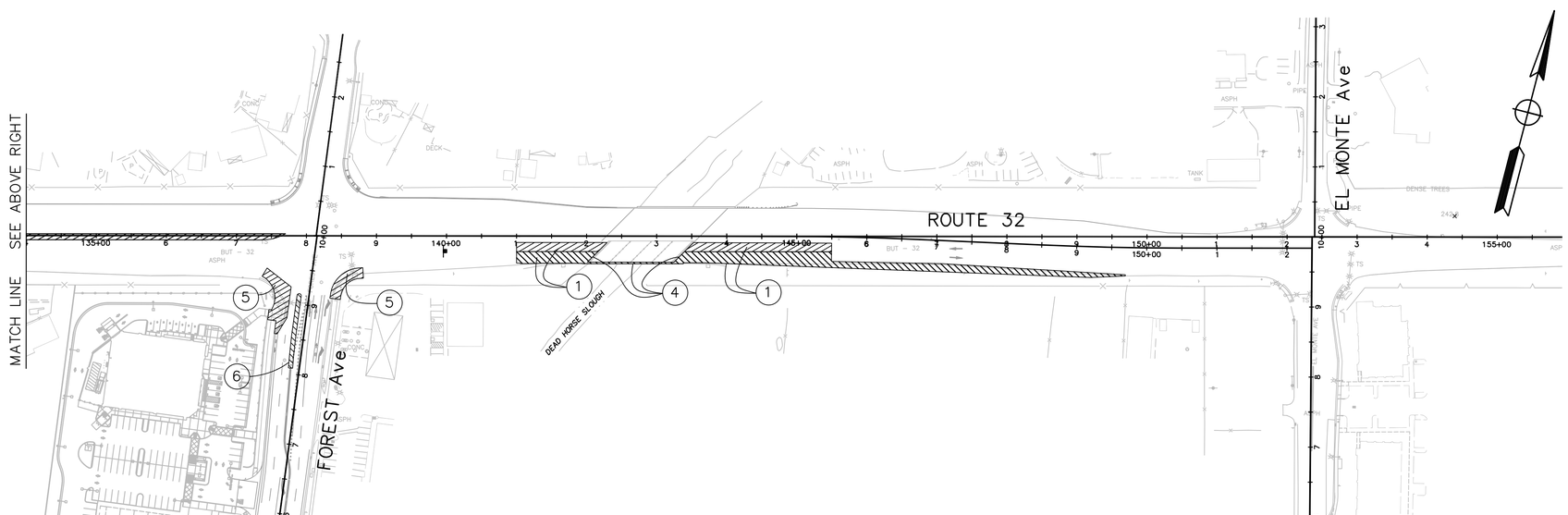

STAGE CONSTRUCTION

STAGE 2/STAGE 3

SCALE: 1" = 100'

SC-2

STATE OF CALIFORNIA – DEPARTMENT OF TRANSPORTATION
Caltrans

CONSULTANT FUNCTIONAL SUPERVISOR: ROBERT MATTHEW BROGAN

CALCULATED-DESIGNED BY: J. PANGBURN
CHECKED BY: M. BROGAN

REVISED BY
DATE REVISED

PATH: V:\Chico-55-0131-SR32 widening\CADD\Drawing\ FILE NAME: sr32_SC2 PLOT DATE: Dec 20, 2011-09:09:38am CAD USER: amillar

LAST REVISION 00-00-00 DATE PLOTTED => $DATE TIME PLOTTED => $TIME

Dist	COUNTY	ROUTE	POST MILES TOTAL PROJECT	SHEET No.	TOTAL SHEETS
03	But	32	10.3/11.3	52	144

R.M. Brogan 12-22-11
REGISTERED CIVIL ENGINEER DATE

DECEMBER 22, 2011
PLANS APPROVAL DATE

REGISTERED PROFESSIONAL ENGINEER ROBERT MATTHEW BROGAN No. 63854 Exp. 9/30/12 CIVIL STATE OF CALIFORNIA

THE STATE OF CALIFORNIA OR ITS OFFICERS OR AGENTS SHALL NOT BE RESPONSIBLE FOR THE ACCURACY OR COMPLETENESS OF SCANNED COPIES OF THIS PLAN SHEET.

MARK THOMAS & CO., INC.
7300 FOLSOM BLVD STE 203
SACRAMENTO, CA 95826

CITY OF CHICO
CAPITAL PROJECT SERVICES
411 MAIN STREET
CHICO, CA 95927

NOTES:

1. ALL EXISTING ROADSIDE SIGNS SHALL REMAIN UNLESS OTHERWISE NOTED.
2. TEMPORARY RAILING(TYPE K) SHALL BE PINNED WHEN CLEARANCE FROM BACK OF RAILING TO WORKZONE IS LESS THAN 2'. SEE Std PLAN NSP T3A FOR DETAILS.
3. CONTRACTOR SHALL MINIMIZE CONSTRUCTION DURATION THROUGH DRIVEWAYS. SEE SPECIAL PROVISIONS.

LEGEND (TRAFFIC HANDLING ONLY):

- STAGE 1 ROADWAY CONSTRUCTION
- XX — Temp TRAFFIC STRIPE (PAINT) DETAIL
- XW — Temp CROSSWALK (12" PAINTED Pvmt MARKING)
- XX — TRAFFIC STRIPE DETAIL TO REMOVE
- CHANNELIZER (SURFACE MOUNTED)
- Temp RAILING (TYPE K)
- LIMIT OF Temp TRAFFIC STRIPE DETAIL
- DIRECTION OF TRAFFIC (THIS STAGE)
- Temp TYPE III BARRICADE
- INSTALL CONSTRUCTION ROADSIDE SIGN
- Temp ARROW (TYPE II)
- Temp ARROW (TYPE III) (L)
- Temp ARROW (TYPE III) (R)
- Temp ARROW (TYPE VI)
- REMOVE Exist TRAFFIC STRIPE
- Const AREA SIGN(SINGLE POST)

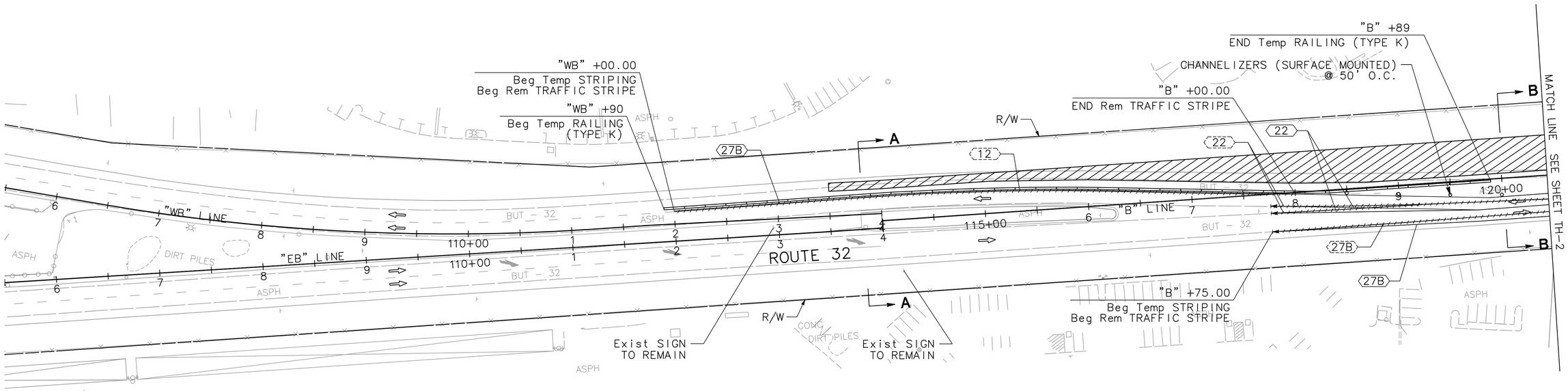

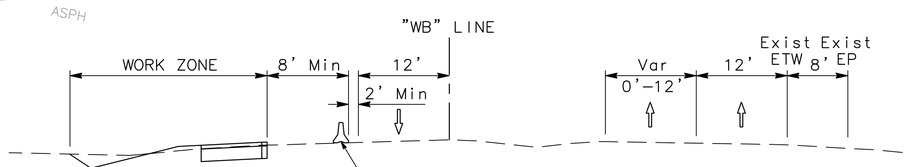

SECTION A-A
NO SCALE

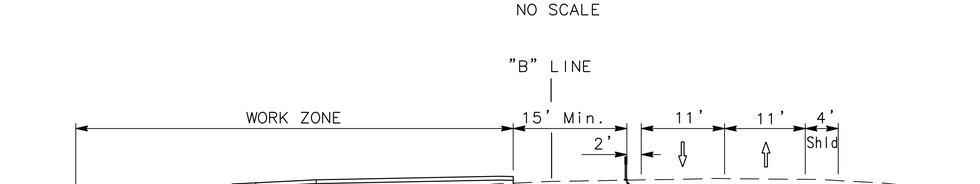

SECTION B-B
NO SCALE

TRAFFIC HANDLING

STAGE 1

SCALE:1" = 50'

TH-1

THIS PLAN ACCURATE FOR TRAFFIC HANDLING ONLY

STATE OF CALIFORNIA - DEPARTMENT OF TRANSPORTATION
Caltrans
CONSULTANT FUNCTIONAL SUPERVISOR: ROBERT MATTHEW BROGAN
CALCULATED-DESIGNED BY: J. PANGBURN
CHECKED BY: M. BROGAN
REVISED BY
DATE REVISED

PATH: V:\Chico-55-0131-SR32 Widening\CADD\Drawing\ FILE NAME: sr32_TH1-TH4(stage 1) PLOT DATE: Dec 20, 2011-09:10:47am CAD USER: amillar

LAST REVISION 00-00-00 DATE PLOTTED => $DATE TIME PLOTTED => $TIME

BORDER LAST REVISED 7/2/2010 | USERNAME => $USER DGN FILE => $REQUEST | RELATIVE BORDER SCALE IS IN INCHES 0 1 2 3 | UNIT 0000 | PROJECT NUMBER & PHASE 0300000261

Dist	COUNTY	ROUTE	POST MILES TOTAL PROJECT	SHEET No.	TOTAL SHEETS
03	But	32	10.3/11.3	53	144

R.M. Brogan 12-22-11
REGISTERED CIVIL ENGINEER DATE

DECEMBER 22, 2011
PLANS APPROVAL DATE

REGISTERED PROFESSIONAL ENGINEER
ROBERT MATTHEW BROGAN
No. 63854
Exp. 9/30/12
CIVIL
STATE OF CALIFORNIA

THE STATE OF CALIFORNIA OR ITS OFFICERS OR AGENTS SHALL NOT BE RESPONSIBLE FOR THE ACCURACY OR COMPLETENESS OF SCANNED COPIES OF THIS PLAN SHEET.

MARK THOMAS & CO., INC.
7300 FOLSOM BLVD STE 203
SACRAMENTO, CA 95826

CITY OF CHICO
CAPITAL PROJECT SERVICES
411 MAIN STREET
CHICO, CA 95927

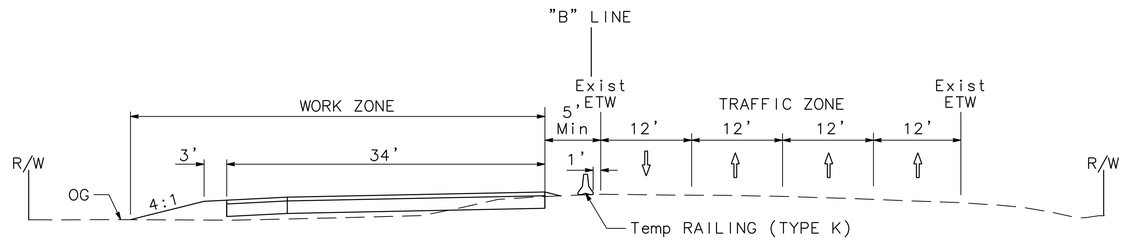

SECTION B-B
NO SCALE

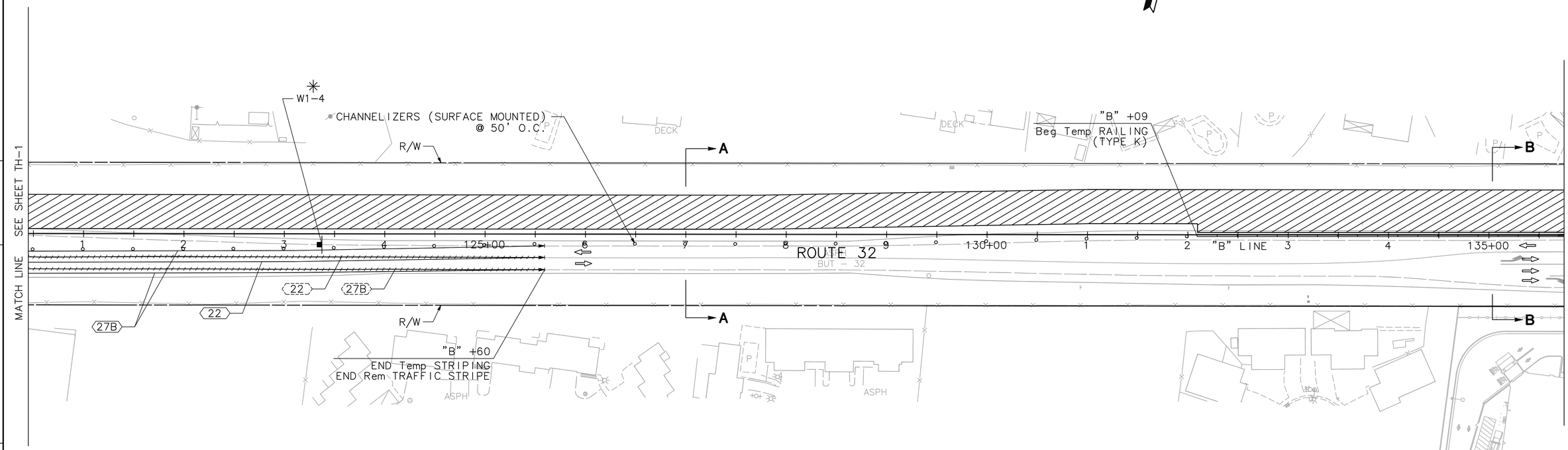

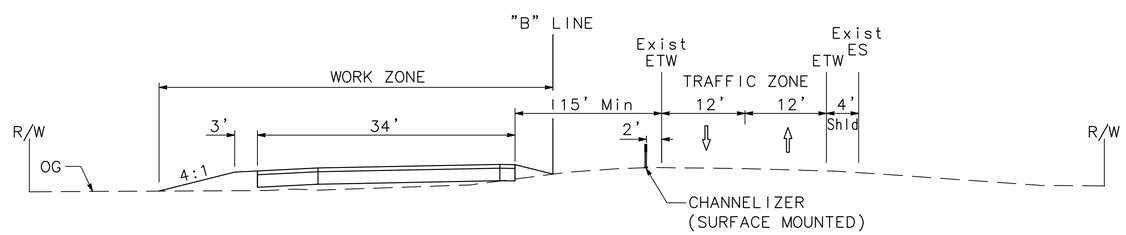

SECTION A-A
NO SCALE

TRAFFIC HANDLING

STAGE 1

SCALE: 1" = 50'

TH-2

THIS PLAN ACCURATE FOR TRAFFIC HANDLING ONLY

STATE OF CALIFORNIA - DEPARTMENT OF TRANSPORTATION
Caltrans

CONSULTANT FUNCTIONAL SUPERVISOR: ROBERT MATTHEW BROGAN
CALCULATED-DESIGNED BY: J. PANGBURN
CHECKED BY: M. BROGAN
REVISED BY
DATE REVISED

LAST REVISION 00-00-00
DATE PLOTTED => $DATE
TIME PLOTTED => $TIME

PATH: V:\Chico-55-0131-SR32 Widening\CADD\Drawing\ FILE NAME: sr32_TH1-TH4(stage 1) PLOT DATE: Dec 20, 2011-09:11:06am CAD USER: amillar

BORDER LAST REVISED 7/2/2010
USERNAME => $USER
DGN FILE => $REQUEST
RELATIVE BORDER SCALE IS IN INCHES 0 1 2 3
UNIT 0000
PROJECT NUMBER & PHASE 0300000261

Dist	COUNTY	ROUTE	POST MILES TOTAL PROJECT	SHEET No.	TOTAL SHEETS
03	But	32	10.3/11.3	54	144

R.M. Brogan 12-22-11
REGISTERED CIVIL ENGINEER DATE

DECEMBER 22, 2011
PLANS APPROVAL DATE

REGISTERED PROFESSIONAL ENGINEER ROBERT MATTHEW BROGAN No. 63854 Exp. 9/30/12 CIVIL STATE OF CALIFORNIA

THE STATE OF CALIFORNIA OR ITS OFFICERS OR AGENTS SHALL NOT BE RESPONSIBLE FOR THE ACCURACY OR COMPLETENESS OF SCANNED COPIES OF THIS PLAN SHEET.

MARK THOMAS & CO., INC.
7300 FOLSOM BLVD STE 203
SACRAMENTO, CA 95826

CITY OF CHICO
CAPITAL PROJECT SERVICES
411 MAIN STREET
CHICO, CA 95927

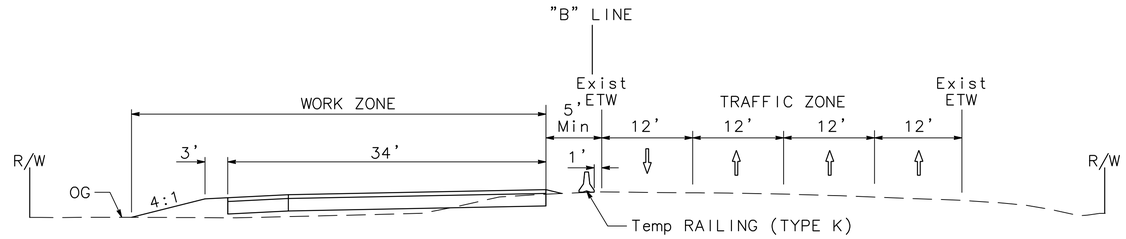

SECTION A-A
NO SCALE

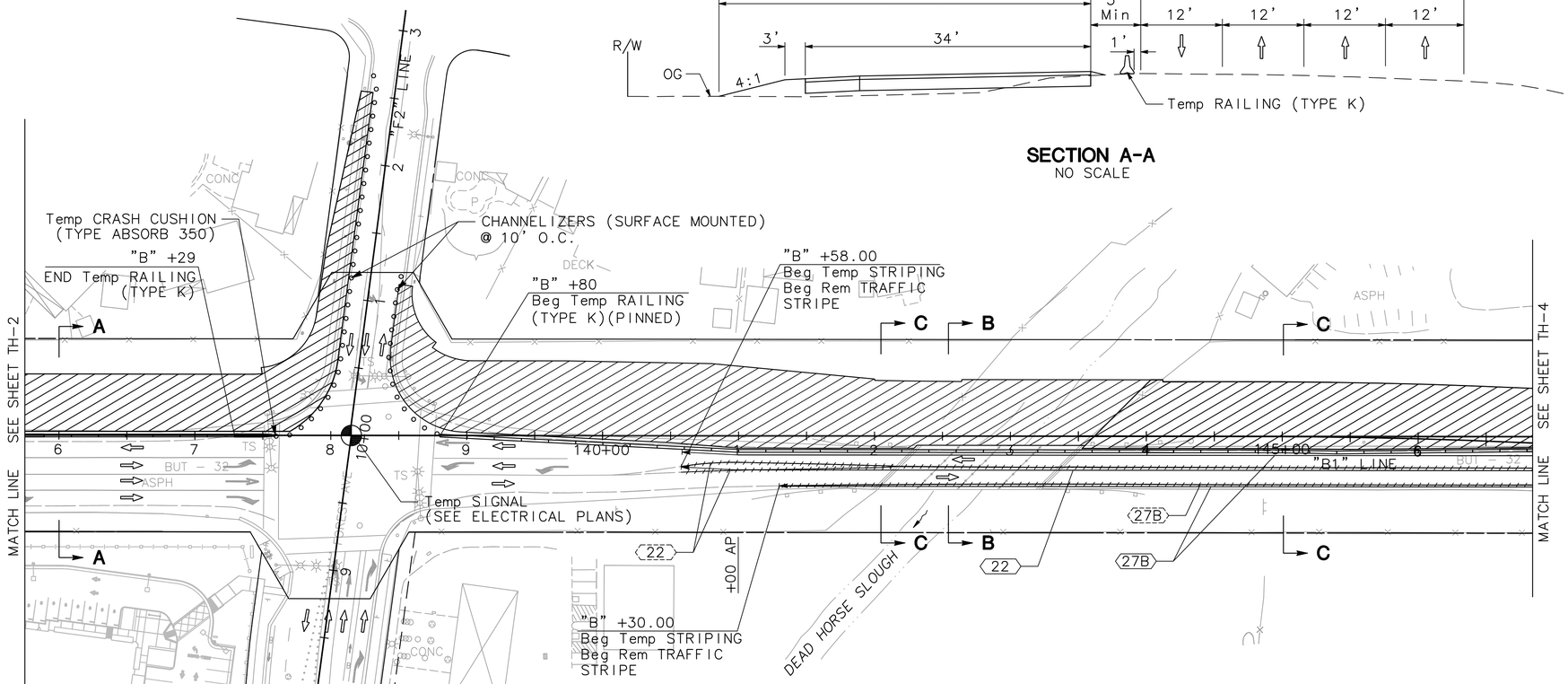

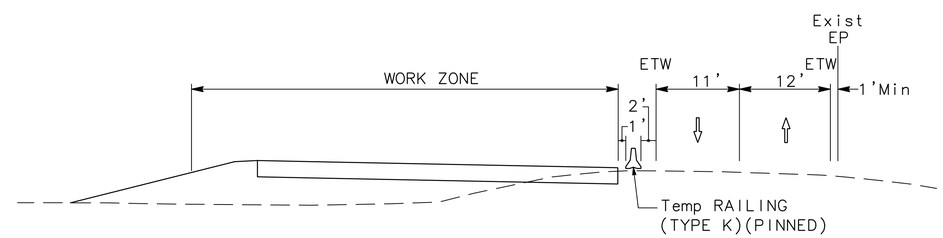

SECTION C-C
NO SCALE

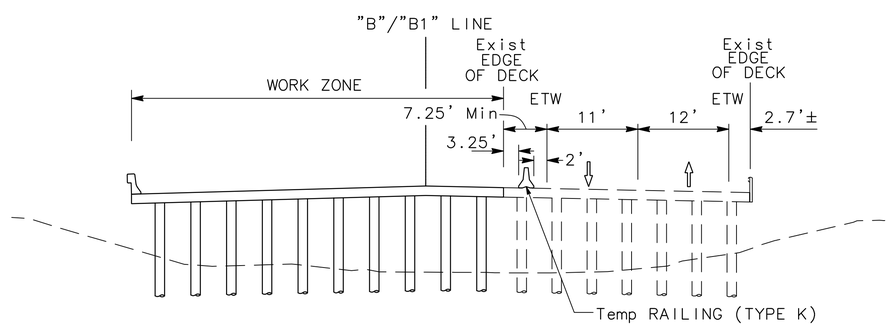

SECTION B-B
NO SCALE

TRAFFIC HANDLING

STAGE 1

SCALE: 1" = 50'

TH-3

THIS PLAN ACCURATE FOR TRAFFIC HANDLING ONLY

STATE OF CALIFORNIA – DEPARTMENT OF TRANSPORTATION
Caltrans

CONSULTANT FUNCTIONAL SUPERVISOR: ROBERT MATTHEW BROGAN
CALCULATED-DESIGNED BY: J. PANGBURN
CHECKED BY: M. BROGAN
REVISED BY
DATE REVISED

LAST REVISION 00-00-00
DATE PLOTTED => $DATE
TIME PLOTTED => $TIME

PATH: V:\Chico-55-0131-SR32 Widening\CADD\Drawing\ FILE NAME: sr32_TH1-TH4(stage 1) PLOT DATE: Dec 20, 2011-10:29:26am CAD USER: amillar

BORDER LAST REVISED 7/2/2010 | USERNAME => $USER DGN FILE => $REQUEST | RELATIVE BORDER SCALE IS IN INCHES 0 1 2 3 | UNIT 0000 | PROJECT NUMBER & PHASE 0300000261

Dist	COUNTY	ROUTE	POST MILES TOTAL PROJECT	SHEET No.	TOTAL SHEETS
03	But	32	10.3/11.3	55	144

R.M.Br 12-22-11
REGISTERED CIVIL ENGINEER DATE

DECEMBER 22, 2011
PLANS APPROVAL DATE

REGISTERED PROFESSIONAL ENGINEER
ROBERT MATTHEW BROGAN
No. 63854
Exp. 9/30/12
CIVIL
STATE OF CALIFORNIA

THE STATE OF CALIFORNIA OR ITS OFFICERS OR AGENTS SHALL NOT BE RESPONSIBLE FOR THE ACCURACY OR COMPLETENESS OF SCANNED COPIES OF THIS PLAN SHEET.

MARK THOMAS & CO., INC.
7300 FOLSOM BLVD STE 203
SACRAMENTO, CA 95826

CITY OF CHICO
CAPITAL PROJECT SERVICES
411 MAIN STREET
CHICO, CA 95927

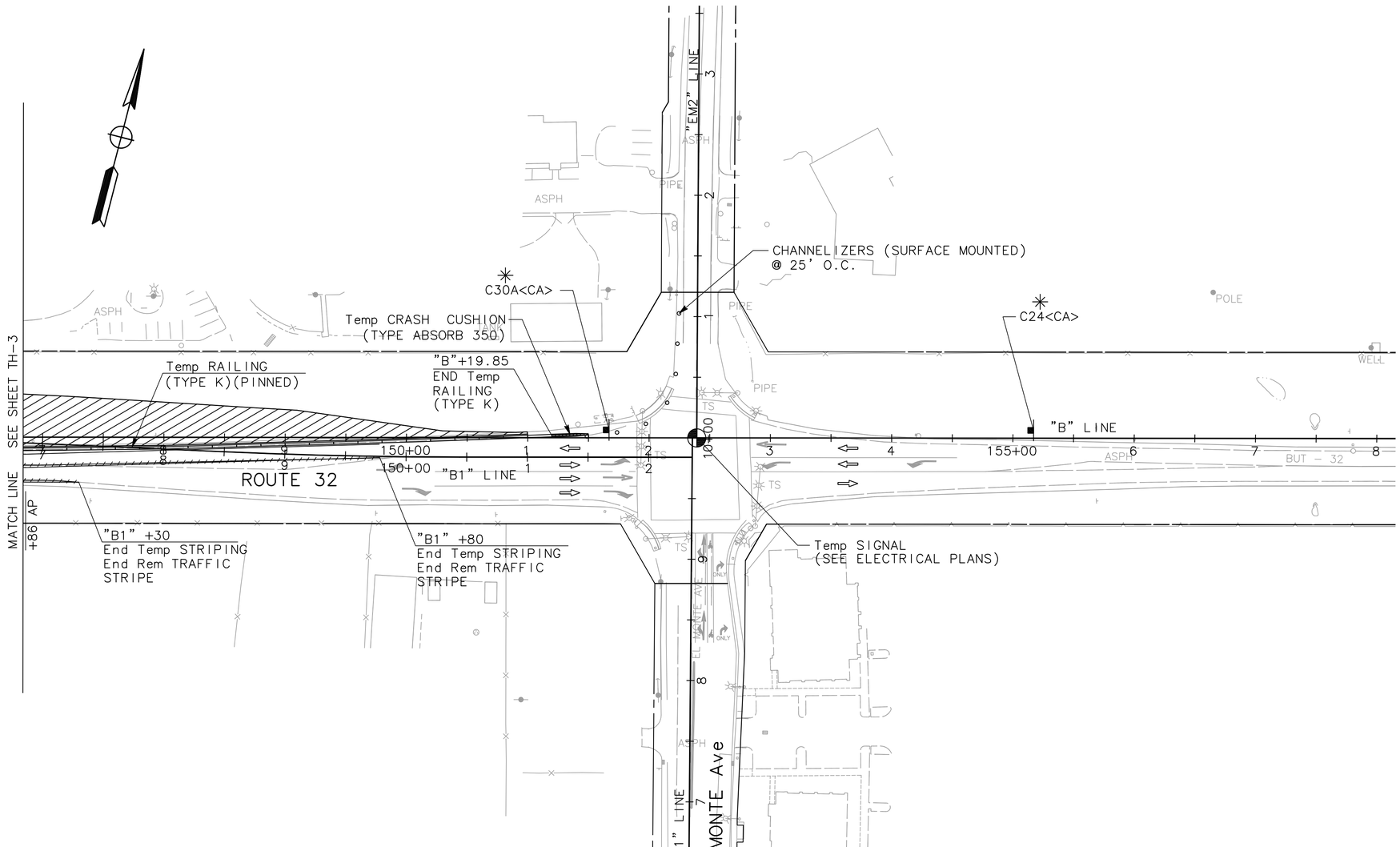

TRAFFIC HANDLING

STAGE 1

SCALE: 1" = 50'

TH-4

THIS PLAN ACCURATE FOR TRAFFIC HANDLING ONLY

STATE OF CALIFORNIA - DEPARTMENT OF TRANSPORTATION
Caltrans

CONSULTANT FUNCTIONAL SUPERVISOR: ROBERT MATTHEW BROGAN

CALCULATED-DESIGNED BY: J. PANGBURN
CHECKED BY: M. BROGAN

REVISED BY
DATE REVISED

LAST REVISION 00-00-00
DATE PLOTTED => $DATE
TIME PLOTTED => $TIME

PATH: V:\Chico-55-0131-SR32 Widening\CADD\Drawing\ FILE NAME: sr32_TH1-TH4(stage 1) PLOT DATE: Dec 20, 2011-09:11:27am CAD USER: amillar

BORDER LAST REVISED 7/2/2010 | USERNAME => $USER | DGN FILE => $REQUEST | RELATIVE BORDER SCALE IS IN INCHES 0 1 2 3 | UNIT 0000 | PROJECT NUMBER & PHASE 0300000261

Dist	COUNTY	ROUTE	POST MILES TOTAL PROJECT	SHEET No.	TOTAL SHEETS
03	But	32	10.3/11.3	56	144

R.M. Brogan 12-22-11
REGISTERED CIVIL ENGINEER DATE

DECEMBER 22, 2011
PLANS APPROVAL DATE

REGISTERED PROFESSIONAL ENGINEER ROBERT MATTHEW BROGAN No. 63854 Exp. 9/30/12 CIVIL STATE OF CALIFORNIA

THE STATE OF CALIFORNIA OR ITS OFFICERS OR AGENTS SHALL NOT BE RESPONSIBLE FOR THE ACCURACY OR COMPLETENESS OF SCANNED COPIES OF THIS PLAN SHEET.

MARK THOMAS & CO., INC.
7300 FOLSOM BLVD STE 203
SACRAMENTO, CA 95826

CITY OF CHICO
CAPITAL PROJECT SERVICES
411 MAIN STREET
CHICO, CA 95927

NOTES:

1. TEMPORARY RAILING (TYPE K) SHALL BE PINNED WHEN CLEARANCE FROM BACK OF RAILING TO WORKZONE IS LESS THAN 2'. SEE Std PLAN NSP T3A FOR DETAILS.
2. CONTRACTOR SHALL MINIMIZE CONSTRUCTION DURATION THROUGH DRIVEWAYS. SEE SPECIAL PROVISIONS.

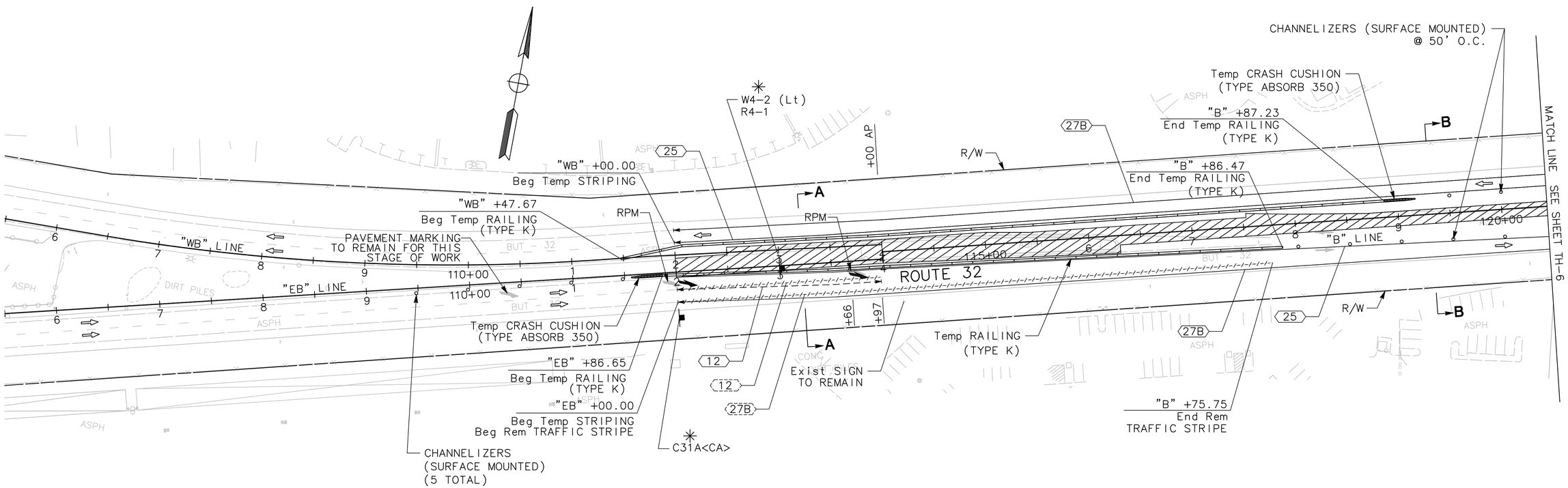

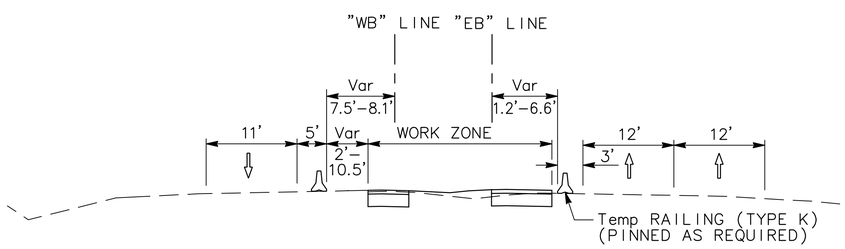

SECTION A-A
NO SCALE

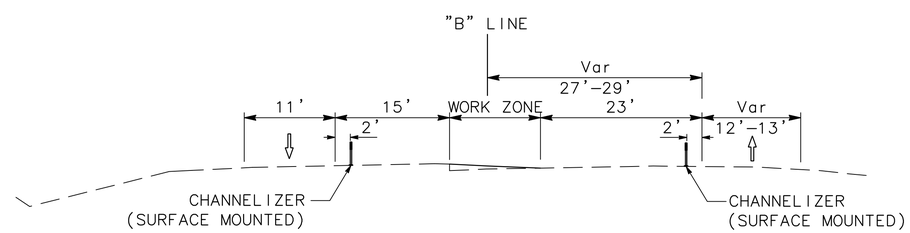

SECTION B-B
NO SCALE

TRAFFIC HANDLING
STAGE 2

SCALE: 1" = 50'

TH-5

THIS PLAN ACCURATE FOR TRAFFIC HANDLING ONLY

STATE OF CALIFORNIA – DEPARTMENT OF TRANSPORTATION
Caltrans
CONSULTANT FUNCTIONAL SUPERVISOR: ROBERT MATTHEW BROGAN
CALCULATED-DESIGNED BY: J. PANGBURN
CHECKED BY: M. BROGAN
REVISED BY
DATE REVISED

LAST REVISION 00-00-00
DATE PLOTTED => $DATE
TIME PLOTTED => $TIME

PATH: V:\Chico-55-0131-SR32 Widening\CADD\Drawing\ FILE NAME: sr32_TH5-TH8(stage 2) PLOT DATE: Dec 20, 2011-09:12:29am CAD USER: amillar

BORDER LAST REVISED 7/2/2010 | USERNAME => $USER | DGN FILE => $REQUEST | RELATIVE BORDER SCALE IS IN INCHES 0 1 2 3 | UNIT 0000 | PROJECT NUMBER & PHASE 0300000261

Dist	COUNTY	ROUTE	POST MILES TOTAL PROJECT	SHEET No.	TOTAL SHEETS
03	But	32	10.3/11.3	57	144

R.M. Brogan 12-22-11
REGISTERED CIVIL ENGINEER DATE

DECEMBER 22, 2011
PLANS APPROVAL DATE

REGISTERED PROFESSIONAL ENGINEER ROBERT MATTHEW BROGAN No. 63854 Exp. 9/30/12 CIVIL STATE OF CALIFORNIA

THE STATE OF CALIFORNIA OR ITS OFFICERS OR AGENTS SHALL NOT BE RESPONSIBLE FOR THE ACCURACY OR COMPLETENESS OF SCANNED COPIES OF THIS PLAN SHEET.

MARK THOMAS & CO., INC.
7300 FOLSOM BLVD STE 203
SACRAMENTO, CA 95826

CITY OF CHICO
CAPITAL PROJECT SERVICES
411 MAIN STREET
CHICO, CA 95927

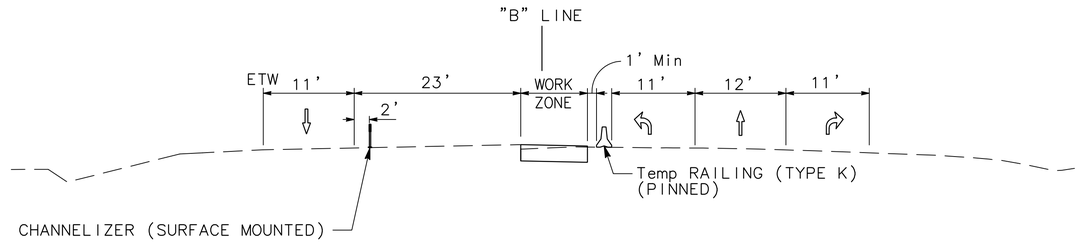

SECTION B-B
NO SCALE

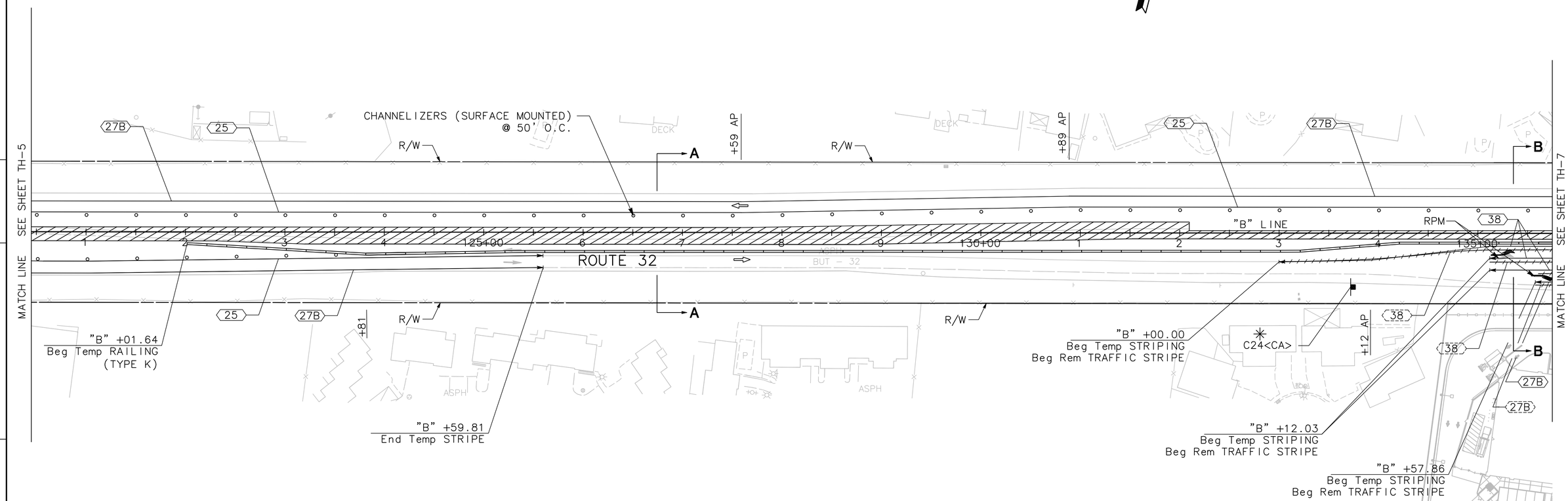

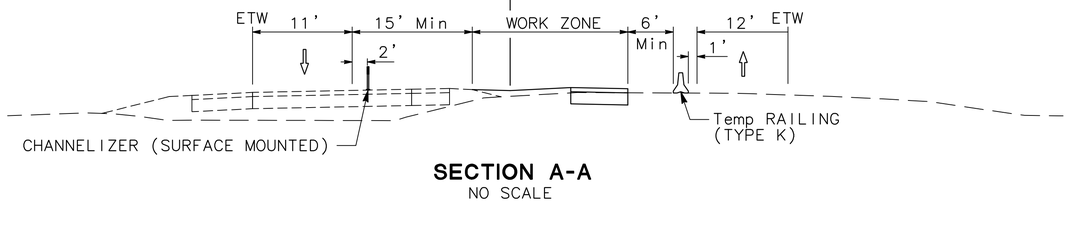

SECTION A-A
NO SCALE

TRAFFIC HANDLING

STAGE 2

SCALE: 1" = 50'

TH-6

THIS PLAN ACCURATE FOR TRAFFIC HANDLING ONLY

STATE OF CALIFORNIA - DEPARTMENT OF TRANSPORTATION
Caltrans

CONSULTANT FUNCTIONAL SUPERVISOR: ROBERT MATTHEW BROGAN
CALCULATED-DESIGNED BY: J. PANGBURN
CHECKED BY: M. BROGAN
REVISED BY
DATE REVISED

LAST REVISION 00-00-00
DATE PLOTTED => $DATE
TIME PLOTTED => $TIME

PATH: V:\Chico-55-0131-SR32 Widening\CADD\Drawing\
FILE NAME: sr32_TH5-TH8(stage 2)
PLOT DATE: Dec 20, 2011-09:12:48am
CAD USER: amillar

BORDER LAST REVISED 7/2/2010
USERNAME => $USER
DGN FILE => $REQUEST
RELATIVE BORDER SCALE IS IN INCHES 0 1 2 3
UNIT 0000
PROJECT NUMBER & PHASE 0300000261

Dist	COUNTY	ROUTE	POST MILES TOTAL PROJECT	SHEET No.	TOTAL SHEETS
03	But	32	10.3/11.3	58	144

R.M. Brogan 12-22-11
REGISTERED CIVIL ENGINEER DATE

DECEMBER 22, 2011
PLANS APPROVAL DATE

REGISTERED PROFESSIONAL ENGINEER ROBERT MATTHEW BROGAN No. 63854 Exp. 9/30/12 CIVIL STATE OF CALIFORNIA

THE STATE OF CALIFORNIA OR ITS OFFICERS OR AGENTS SHALL NOT BE RESPONSIBLE FOR THE ACCURACY OR COMPLETENESS OF SCANNED COPIES OF THIS PLAN SHEET.

MARK THOMAS & CO., INC.
7300 FOLSOM BLVD STE 203
SACRAMENTO, CA 95826

CITY OF CHICO
CAPITAL PROJECT SERVICES
411 MAIN STREET
CHICO, CA 95927

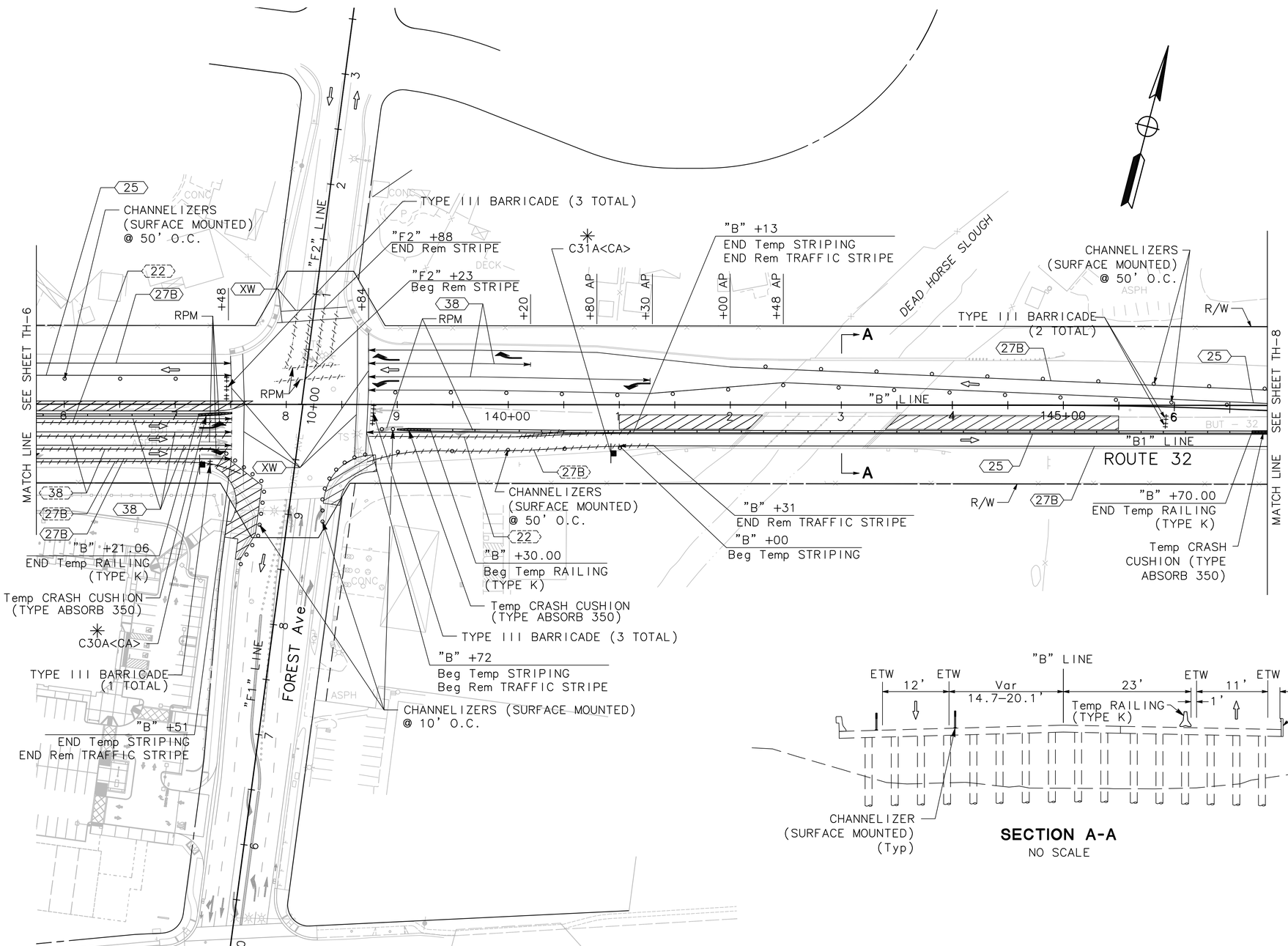

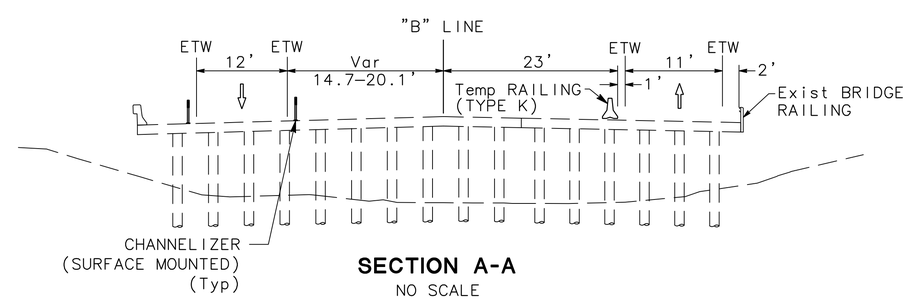

SECTION A-A
NO SCALE

TRAFFIC HANDLING
STAGE 2
SCALE: 1" = 50'

TH-7

THIS PLAN ACCURATE FOR TRAFFIC HANDLING ONLY

STATE OF CALIFORNIA - DEPARTMENT OF TRANSPORTATION
Caltrans

CONSULTANT FUNCTIONAL SUPERVISOR: ROBERT MATTHEW BROGAN
CALCULATED-DESIGNED BY: J. PANGBURN
CHECKED BY: M. BROGAN
REVISED BY
DATE REVISED

LAST REVISION 00-00-00
DATE PLOTTED => $DATE
TIME PLOTTED => $TIME

PATH: V:\Chico-55-0131-SR32 Widening\CADD\Drawing\ FILE NAME: sr32_TH5-TH8(stage 2) PLOT DATE: Dec 20, 2011-10:30:45am CAD USER: amillar

BORDER LAST REVISED 7/2/2010
USERNAME => $USER
DGN FILE => $REQUEST
RELATIVE BORDER SCALE IS IN INCHES 0 1 2 3
UNIT 0000
PROJECT NUMBER & PHASE 0300000261

Dist	COUNTY	ROUTE	POST MILES TOTAL PROJECT	SHEET No.	TOTAL SHEETS
03	But	32	10.3/11.3	59	144

R.M. Brogan 12-22-11
REGISTERED CIVIL ENGINEER DATE

DECEMBER 22, 2011
PLANS APPROVAL DATE

REGISTERED PROFESSIONAL ENGINEER
ROBERT MATTHEW BROGAN
No. 63854
Exp. 9/30/12
CIVIL
STATE OF CALIFORNIA

THE STATE OF CALIFORNIA OR ITS OFFICERS OR AGENTS SHALL NOT BE RESPONSIBLE FOR THE ACCURACY OR COMPLETENESS OF SCANNED COPIES OF THIS PLAN SHEET.

MARK THOMAS & CO., INC.
7300 FOLSOM BLVD STE 203
SACRAMENTO, CA 95826

CITY OF CHICO
CAPITAL PROJECT SERVICES
411 MAIN STREET
CHICO, CA 95927

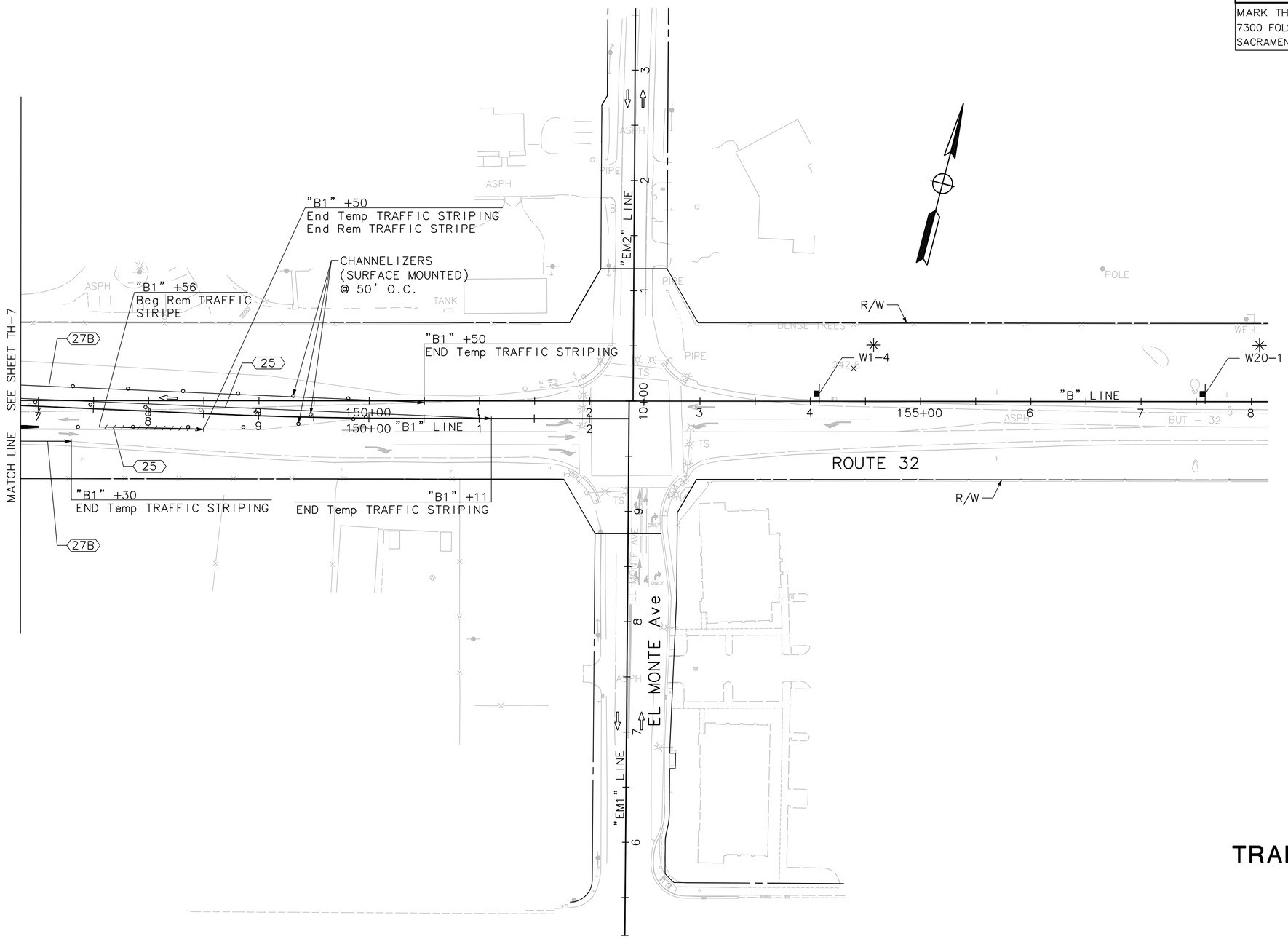

TRAFFIC HANDLING

STAGE 2

SCALE: 1" = 50'

TH-8

THIS PLAN ACCURATE FOR TRAFFIC HANDLING ONLY

STATE OF CALIFORNIA - DEPARTMENT OF TRANSPORTATION
Caltrans

CONSULTANT FUNCTIONAL SUPERVISOR: ROBERT MATTHEW BROGAN
CALCULATED-DESIGNED BY: J. PANGBURN
CHECKED BY: M. BROGAN
REVISED BY
DATE REVISED

LAST REVISION 00-00-00
DATE PLOTTED => $DATE
TIME PLOTTED => $TIME

PATH: V:\Chico-55-0131-SR32 Widening\CADD\Drawing\ FILE NAME: sr32_TH5-TH8(stage 2) PLOT DATE: Dec 20, 2011-09:13:21am CAD USER: amillar

BORDER LAST REVISED 7/2/2010
USERNAME => $USER
DGN FILE => $REQUEST
RELATIVE BORDER SCALE IS IN INCHES 0 1 2 3
UNIT 0000
PROJECT NUMBER & PHASE 0300000261

Dist	COUNTY	ROUTE	POST MILES TOTAL PROJECT	SHEET No.	TOTAL SHEETS
03	But	32	10.3/11.3	60	144

R.M. Brogan 12-22-11
REGISTERED CIVIL ENGINEER DATE

DECEMBER 22, 2011
PLANS APPROVAL DATE

REGISTERED PROFESSIONAL ENGINEER ROBERT MATTHEW BROGAN No. 63854 Exp. 9/30/12 CIVIL STATE OF CALIFORNIA

THE STATE OF CALIFORNIA OR ITS OFFICERS OR AGENTS SHALL NOT BE RESPONSIBLE FOR THE ACCURACY OR COMPLETENESS OF SCANNED COPIES OF THIS PLAN SHEET.

MARK THOMAS & CO., INC.
7300 FOLSOM BLVD STE 203
SACRAMENTO, CA 95826

CITY OF CHICO
CAPITAL PROJECT SERVICES
411 MAIN STREET
CHICO, CA 95927

NOTE:

1. TEMPORARY RAILING (TYPE K) SHALL BE PINNED WHEN CLEARANCE FROM BACK OF RAILING TO WORKZONE IS LESS THAN 2'. SEE Std PLAN NSP T3A FOR DETAILS.
2. STAGE 2 MEDIAN WORK UP TO Sta "B" 131+50 CAN BE PERFORMED CONCURRENTLY WITH STAGE 2A.

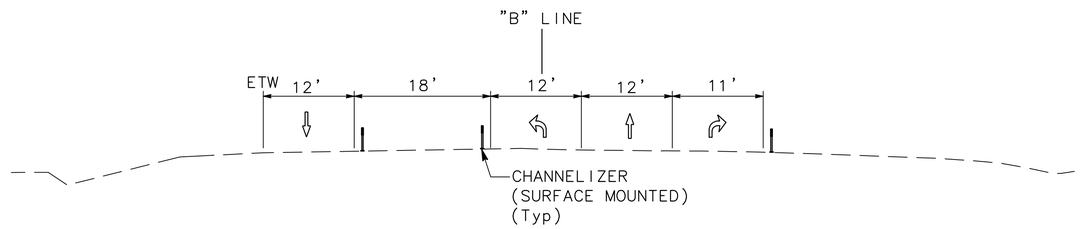

SECTION A-A
NO SCALE

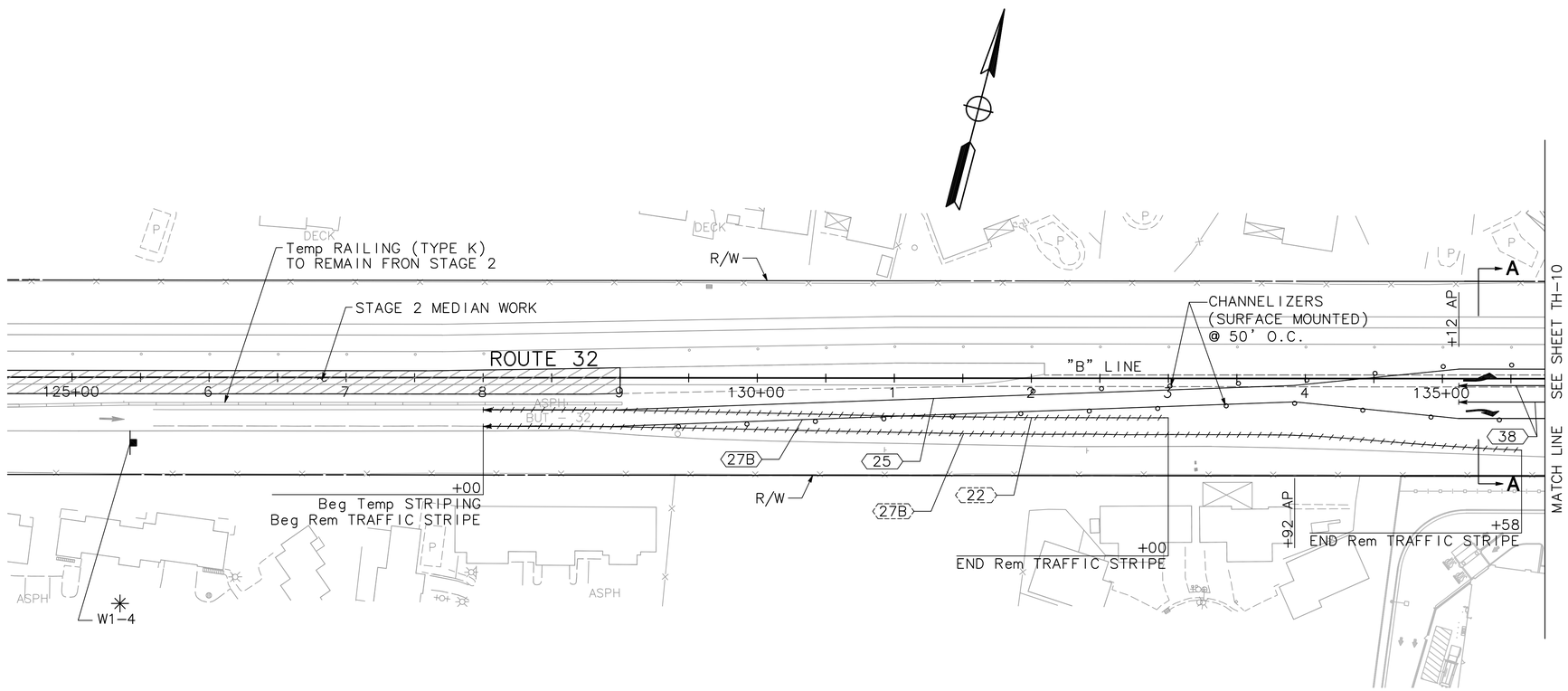

TRAFFIC HANDLING

STAGE 2A

SCALE: 1" = 50'

TH-9

THIS PLAN ACCURATE FOR TRAFFIC HANDLING ONLY

STATE OF CALIFORNIA - DEPARTMENT OF TRANSPORTATION
Caltrans

CONSULTANT FUNCTIONAL SUPERVISOR: ROBERT MATTHEW BROGAN
CALCULATED-DESIGNED BY: J. PANGBURN
CHECKED BY: M. BROGAN
REVISED BY
DATE REVISED

PATH: V:\Chico-55-0131-SR32 Widening\CADD\Drawing\ FILE NAME: sr32_TH9-TH-11(stage 2a) PLOT DATE: Dec 20, 2011-09:14:23am CAD USER: amillar

LAST REVISION 00-00-00 | DATE PLOTTED => $DATE | TIME PLOTTED => $TIME

BORDER LAST REVISED 7/2/2010 | USERNAME => $USER | DGN FILE => $REQUEST | RELATIVE BORDER SCALE IS IN INCHES 0 1 2 3 | UNIT 0000 | PROJECT NUMBER & PHASE 0300000261

Dist	COUNTY	ROUTE	POST MILES TOTAL PROJECT	SHEET No.	TOTAL SHEETS
03	But	32	10.3/11.3	61	144

R.M. Brogan 12-22-11
REGISTERED CIVIL ENGINEER DATE

DECEMBER 22, 2011
PLANS APPROVAL DATE

REGISTERED PROFESSIONAL ENGINEER ROBERT MATTHEW BROGAN No. 63854 Exp. 9/30/12 CIVIL STATE OF CALIFORNIA

THE STATE OF CALIFORNIA OR ITS OFFICERS OR AGENTS SHALL NOT BE RESPONSIBLE FOR THE ACCURACY OR COMPLETENESS OF SCANNED COPIES OF THIS PLAN SHEET.

MARK THOMAS & CO., INC.
7300 FOLSOM BLVD STE 203
SACRAMENTO, CA 95826

CITY OF CHICO
CAPITAL PROJECT SERVICES
411 MAIN STREET
CHICO, CA 95927

NOTES:

1. TEMPORARY RAILING (TYPE K) SHALL BE PINNED AS REQUIRED, BUT SHALL NOT BE PINNED ON THE BRIDGE STRUCTURE.

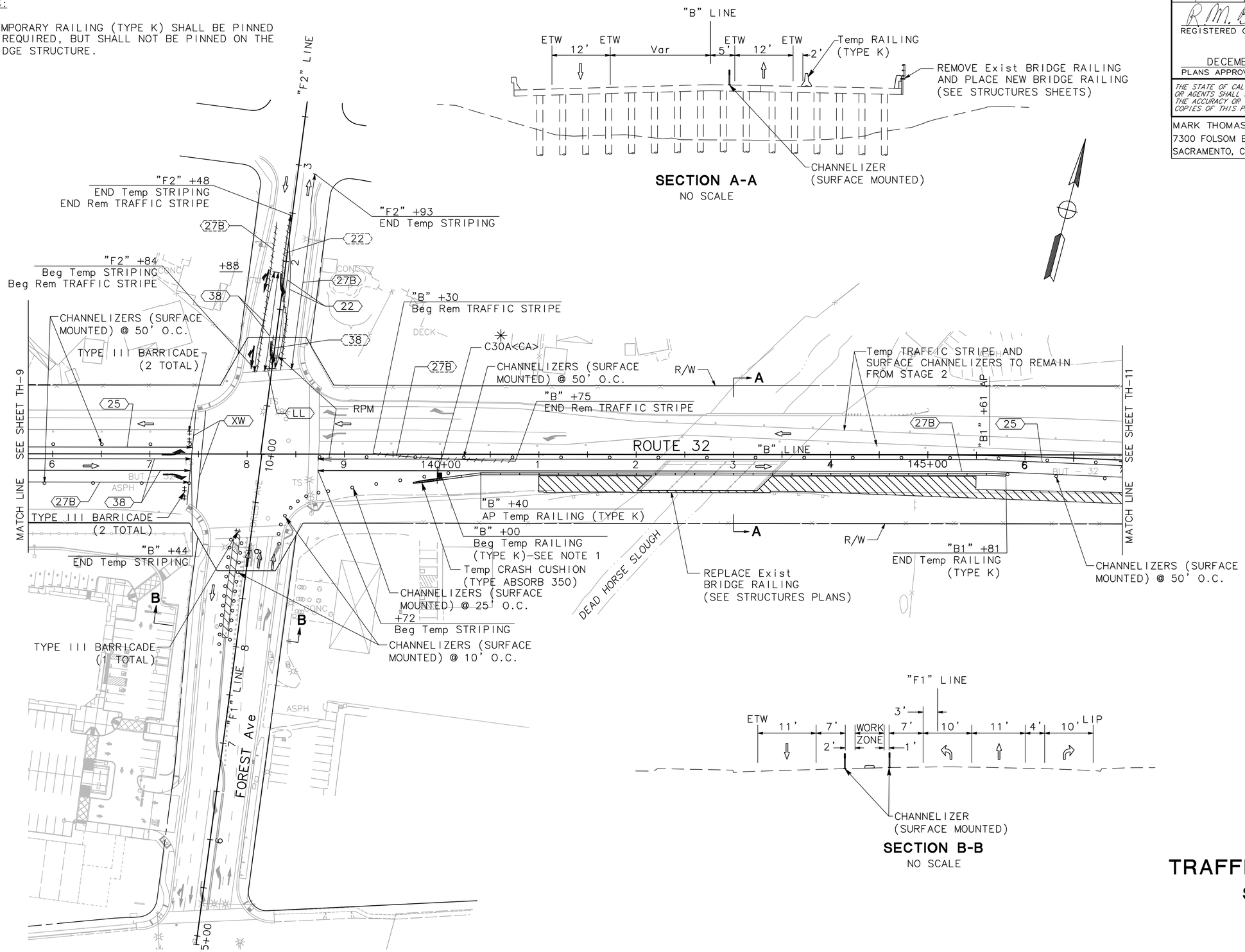

TRAFFIC HANDLING

STAGE 2A

SCALE: 1" = 50'

TH-10

THIS PLAN ACCURATE FOR TRAFFIC HANDLING ONLY

REVISED BY	DATE REVISED
J. PANGBURN	M. BROGAN
CALCULATED-DESIGNED BY	CHECKED BY
SUPERVISOR	ROBERT MATTHEW BROGAN
CONSULTANT FUNCTIONAL SUPERVISOR	

STATE OF CALIFORNIA – DEPARTMENT OF TRANSPORTATION

Caltrans

PATH: V:\Chico-55-0131-SR32 Widening\CADD\Drawing\ FILE NAME: sr32_TH9-TH-11(stage 2a) PLOT DATE: Dec 20, 2011-10:33:05am CAD USER: amillar

LAST REVISION 00-00-00 DATE PLOTTED => $DATE TIME PLOTTED => $TIME

Dist	COUNTY	ROUTE	POST MILES TOTAL PROJECT	SHEET No.	TOTAL SHEETS
03	But	32	10.3/11.3	62	144

R.M. Brogan 12-22-11
REGISTERED CIVIL ENGINEER DATE

DECEMBER 22, 2011
PLANS APPROVAL DATE

REGISTERED PROFESSIONAL ENGINEER
ROBERT MATTHEW BROGAN
No. 63854
Exp. 9/30/12
CIVIL
STATE OF CALIFORNIA

THE STATE OF CALIFORNIA OR ITS OFFICERS OR AGENTS SHALL NOT BE RESPONSIBLE FOR THE ACCURACY OR COMPLETENESS OF SCANNED COPIES OF THIS PLAN SHEET.

MARK THOMAS & CO., INC.
7300 FOLSOM BLVD STE 203
SACRAMENTO, CA 95826

CITY OF CHICO
CAPITAL PROJECT SERVICES
411 MAIN STREET
CHICO, CA 95927

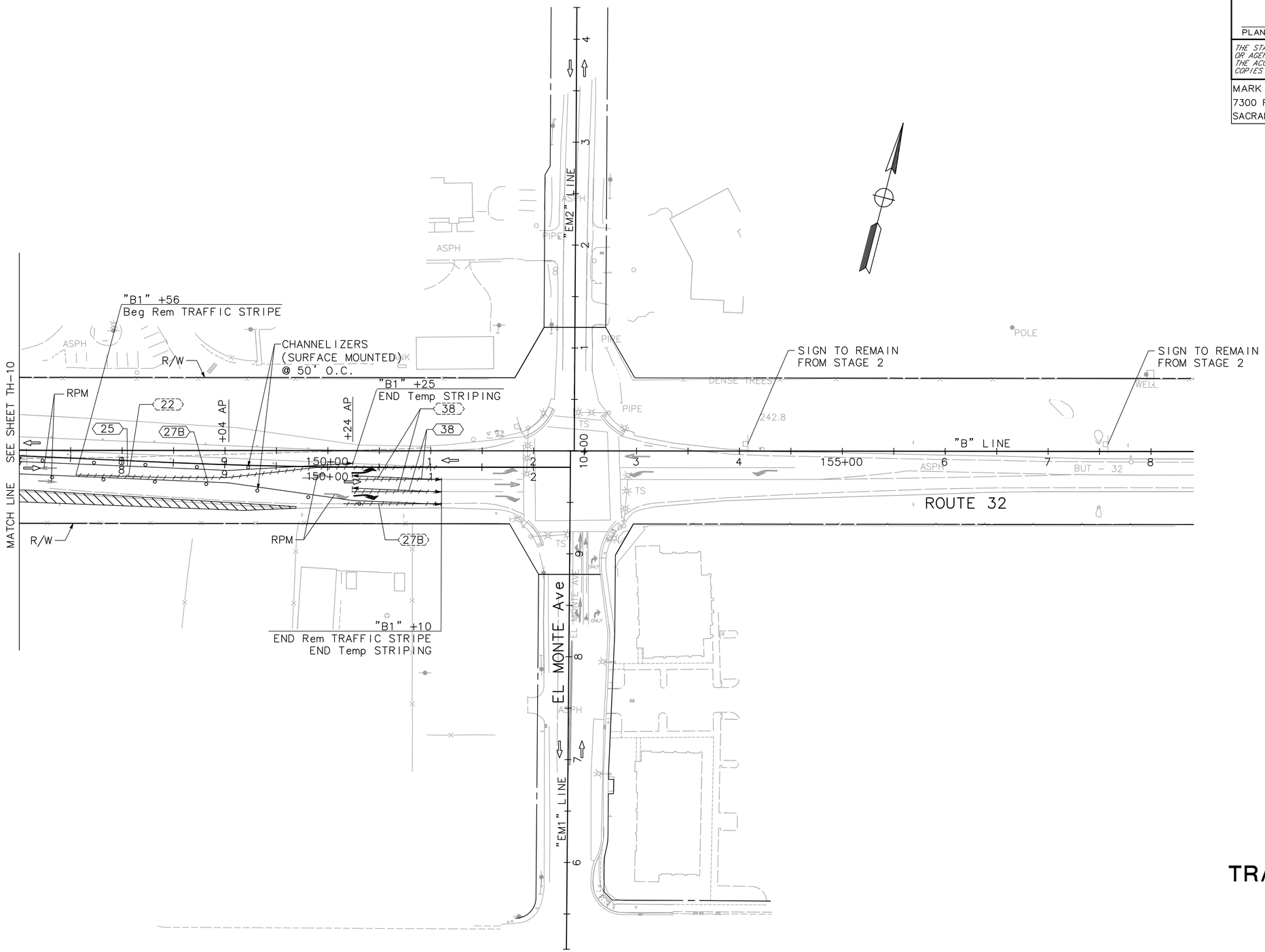

TRAFFIC HANDLING

STAGE 2A

SCALE: 1" = 50'

TH-11

THIS PLAN ACCURATE FOR TRAFFIC HANDLING ONLY

STATE OF CALIFORNIA - DEPARTMENT OF TRANSPORTATION
Caltrans

CONSULTANT FUNCTIONAL SUPERVISOR: ROBERT MATTHEW BROGAN
CALCULATED-DESIGNED BY: J. PANGBURN
CHECKED BY: M. BROGAN
REVISED BY
DATE REVISED

LAST REVISION 00-00-00
DATE PLOTTED => $DATE
TIME PLOTTED => $TIME

PATH: V:\Chico-55-0131-SR32 Widening\CADD\Drawing\
FILE NAME: sr32_TH9-TH-11(stage 2a) PLOT DATE: Dec 20, 2011-09:14:41am CAD USER: amillar

BORDER LAST REVISED 7/2/2010
USERNAME => $USER
DGN FILE => $REQUEST
RELATIVE BORDER SCALE IS IN INCHES 0 1 2 3
UNIT 0000
PROJECT NUMBER & PHASE 0300000261

Dist	COUNTY	ROUTE	POST MILES TOTAL PROJECT	SHEET No.	TOTAL SHEETS
03	But	32	10.3/11.3	63	144

R.M. Brogan 12-22-11
REGISTERED CIVIL ENGINEER DATE

DECEMBER 22, 2011
PLANS APPROVAL DATE

REGISTERED PROFESSIONAL ENGINEER ROBERT MATTHEW BROGAN No. 63854 Exp. 9/30/12 CIVIL STATE OF CALIFORNIA

THE STATE OF CALIFORNIA OR ITS OFFICERS OR AGENTS SHALL NOT BE RESPONSIBLE FOR THE ACCURACY OR COMPLETENESS OF SCANNED COPIES OF THIS PLAN SHEET.

MARK THOMAS & CO., INC.
7300 FOLSOM BLVD STE 203
SACRAMENTO, CA 95826

CITY OF CHICO
CAPITAL PROJECT SERVICES
411 MAIN STREET
CHICO, CA 95927

TEMPORARY PAVEMENT DELINEATION

STAGE	STATION	DETAIL No. / ITEM	LENGTH	TEMPORARY TRAFFIC STRIPE (PAINT)	TEMPORARY PAVEMENT MARKING (PAINT)	TEMPORARY PAVEMENT MARKER MARKER (TYPE A)	MARKER (TYPE D)	MARKER (TYPE G)	MARKER (TYPE H)
			LF	LF	SF		EA	EA	EA
1	"WB" 111+90.04 TO "B" 125+59.20	27B	1371	1371					
	"B" 117+75.68 TO "B" 119+75.72	22	401	803			36		
	"B" 119+75.72 TO "B" 125+59.25	22	584	1168			51		
	"B" 117+75.75 TO "B" 125+59.29	22	784	1568			68		
	"B" 141+34.82 TO "B" 147+29.90	27B	596	596					
	"B" 140+57.81 TO "B" 149+77.98	22	920	1841			79		
	"B" 140+57.81 TO "B" 149+77.98	27B	920	920					
SUBTOTAL				8267	0	0	234	0	0
2	"EB" 112+00.00 TO "EB" 113+97.22	12	198	198	84			6	
	"EB" 112+00.00 TO "B" 125+59.65	27B	1361	1361					
	"EB" 112+00.00 TO "B" 125+59.65	25	1360	1360					30
	"WB" 112+00.00 TO "B" 137+50.40	27B	2550	2550					
	"WB" 112+00.00 TO "B" 137+50.40	25	2551	2551					55
	"B" 133+00.00 TO "B" 137+61.75	25	452	452					11
	"B" 133+00.00 TO "B" 137+61.75	38	463	463				21	
	"B" 135+12.03 TO "B" 137+61.75	38	239	239	168			11	
	"B" 135+12.03 TO "B" 137+61.75	38	239	239				11	
	"B" 135+12.03 TO "B" 137+61.75	27B	193	193					
	"B" 137+61.75	XW	41	41					
	"B" 137+61.75	XW	110	110					
	"B" 138+25.33	XW	60	60					
	"B" 138+25.33	XW	68	68					
	"B" 138+74.15	XW	118	118					
	"B" 138+74.15	XW	112	112					
	"B" 138+74.15 TO "B" 141+27.71	38	146	146	168			8	
	"B" 138+74.15 TO "B" 141+27.71	38	254	254				12	
	"B" 138+74.15 TO "B" 150+49.77	27B	1178	1178					
	"B" 138+74.15 TO "B" 151+10.77	25	1238	1238					27
	"B" 138+74.15 TO "B" 148+49.72	25	978	978					22
	"B" 141+00.00 TO "B" 147+29.90	27B	630	630					
SUBTOTAL				14539	420	0	0	69	145
2A	"B" 128+0.00 TO "B" 137+43.82	25	945	945					21
	"B" 128+00.00 TO "B" 137+43.82	27B	942	942					
	"B" 135+12.03 TO "B" 137+43.82	38	230	230	168			11	
	"B" 135+12.03 TO "B" 137+43.82	38	231	231				11	
	"B" 137+43.82	XW	98	98					
	"B" 137+43.82	XW	101	101					
	"B" 138+72.81 TO "B" 150+24.26	25	1152	1152					25
	"B" 138+72.81 TO "B" 151+10.52	27B	1239	1239					
	"B" 150+23.76 TO "B" 151+10.52	38	87	87				5	
	"B" 150+23.76 TO "B" 151+10.52	38	87	87	84			5	
	"F2" 10+88.64	LL	11	11					
	"F2" 10+86.51 TO "F2" 12+93.01	38	212	212	84			10	
	"F2" 10+86.51 TO "F2" 12+93.01	22	129	258	90		13		
	"F2" 10+86.51 TO "F2" 12+93.01	22	155	311			15		
	"F2" 10+86.51 TO "F2" 12+93.01	27B	203	203					
SUBTOTAL				6107	426	0	28	42	46
			TOTAL	28913	846	0	262	111	191
						564			

TEMPORARY RAILING (TYPE K)

STAGE	LOCATION	Temp RAIL (TYPE K)
		LF
1	"WB" 111+89.99 TO "B" 119+89.25	800
	"B" 132+09.19 TO "B" 137+29.19	520
	"B" 138+80.31 TO "B" 151+19.85	1240
	SUBTOTAL	2560
2	"EB" 111+86.65 TO "B" 117+86.47	600
	"WB" 111+47.67 TO "B" 118+87.23	740
	"B" 122+01.64 TO "B" 137+21.06	1520
	"B" 139+30.00 TO "B" 146+70.00	740
	SUBTOTAL	3600
2A	"B" 139+01.39 TO "B" 145+81	580
	SUBTOTAL	580
TOTAL		6740

TYPE III BARRICADE

STAGE	LOCATION	BARRICADE (TYPE III)
		EA
2	"B" 137+31.55	1
	"B" 137+64.99	3
	"B" 138+78.30	3
	"B" 145+91.96	2
	SUBTOTAL	9
2A	"F1" 9+18.50	1
	"B" 137+43.05	4
	SUBTOTAL	5
TOTAL		14

TRAFFIC HANDLING QUANTITIES
THQ-1

STATE OF CALIFORNIA – DEPARTMENT OF TRANSPORTATION
Caltrans
CONSULTANT FUNCTIONAL SUPERVISOR: ROBERT MATTHEW BROGAN
CALCULATED-DESIGNED BY: J. PANGBURN
CHECKED BY: M. BROGAN
REVISED BY
DATE REVISED

LAST REVISION 00-00-00
DATE PLOTTED => $DATE
TIME PLOTTED => $TIME

Dist	COUNTY	ROUTE	POST MILES TOTAL PROJECT	SHEET No.	TOTAL SHEETS
03	But	32	10.3/11.3	64	144

R. M. Brogan 12-22-11
REGISTERED CIVIL ENGINEER DATE

DECEMBER 22, 2011
PLANS APPROVAL DATE

REGISTERED PROFESSIONAL ENGINEER ROBERT MATTHEW BROGAN No. 63854 Exp. 9/30/12 CIVIL STATE OF CALIFORNIA

THE STATE OF CALIFORNIA OR ITS OFFICERS OR AGENTS SHALL NOT BE RESPONSIBLE FOR THE ACCURACY OR COMPLETENESS OF SCANNED COPIES OF THIS PLAN SHEET.

MARK THOMAS & CO., INC.
7300 FOLSOM BLVD STE 203
SACRAMENTO, CA 95826

CITY OF CHICO
CAPITAL PROJECT SERVICES
411 MAIN STREET
CHICO, CA 95927

REMOVE

STAGE	STATION	DETAIL #	THERMOPLASTIC TRAFFIC STRIPE	THERMOPLASTIC TRAFFIC STRIPE (YELLOW)	THERMOPLASTIC PAVEMENT MARKINGS	PAVEMENT MARKERS
			LF	LF	SF	EA
1	"WB" 112+00.00 TO "B" 118+00.00	12	151			14
	"B" 117+75.68 TO "B" 125+59.19	22		1861		80
	"B" 117+75.75 TO "B" 125+59.29	27B	784			
	"B" 141+30.21 TO "B" 147+29.90	27B	734			
	"B" 140+57.86 TO "B" 149+78.07	22		2160		92
SUBTOTAL			1669	4021	0	186
2	"EB" 112+00.00 TO "EB" 113+96.78	12	50		84	6
	"EB" 112+00.00 TO "B" 117+75.75	27B	576			
	"B" 133+00.00 TO "B" 137+50.65	22		903		40
	"B" 138+74.94 TO "B" 141+12.69	22		564		26
	"B" 147+55.07 TO "B" 148+49.73	22		190		10
	"B" 135+12.03 TO "B" 137+58.78	38	239		168	11
	"B" 135+12.03 TO "B" 137+58.78	38	190		33	9
	"B" 135+12.03 TO "B" 137+58.78	27B	203			
	"B" 138+73.07 TO "B" 141+30.90	27B	260		84	
	"F2" 10+35.70 TO "F2" 10+88.30	22		106		7
	"F2" 10+35.70 TO "F2" 10+88.30	27B	54		113	
	"F2" 10+35.70 TO "F2" 10+88.30	38	53		15	4
	"F2" 10+35.70 TO "F2" 10+88.30	27B	45			
SUBTOTAL			1670	1763	497	113
2A	"B" 128+00.00 TO "B" 133+00.00	22		1001		44
	"B" 147+55.07 TO "B" 151+10.77	22		713	150	32
	"B" 128+00.00 TO "B" 135+57.86	27B	759			
	"B" 139+29.51 TO "B" 140+75.81	27B	147		33	
	"B" 150+15.42 TO "B" 151+09.82	38	87			5
	"B" 150+15.42 TO "B" 151+09.82	38	87			5
	"B" 150+15.42 TO "B" 151+09.82	27B	95			
	"F2" 10+88.36 TO "F2" 12+47.44	22		322		16
	"F2" 10+86.00 TO "F2" 11+22.81	38	37		15	3
	"F2" 10+83.55 TO "F2" 12+38.88	27B	156			
SUBTOTAL			1368	2036	198	105
		TOTAL	4707	7820	695	404

CHANNELIZER (SURFACE MOUNTED)

STAGE	LOCATION	EA
1	"B" 118+49.73 TO "B" 132+00.00	28
	"B" 151+48.83 TO "B" 152+24.64	7
	"F2" 10+00.00 TO "F2" 12+64.43	44
	SUBTOTAL	79
2	"B" 116+51.55 TO "B" 137+00.40	53
	"B" 138+86.18 TO "B" 149+96.93	52
	"F1" 8+50.00 TO "F1" 10+00.00	22
	SUBTOTAL	127
2A	"B" 129+42.54 TO "B" 137+41.52	29
	"B" 138+74.42 TO "B" 150+30	38
	"F1" 8+00.00 TO "F1" 9+67.58	31
	SUBTOTAL	98
	TOTAL	304

STATIONARY MOUNTED CONSTRUCTION AREA SIGNS (FOR INFORMATION ONLY-NOT A SEPARATE PAY ITEM)

SHEET	SIGN CODE FEDERAL	SIGN CODE CALIFORNIA	PANEL SIZE (IN)	SIGN MESSAGE	No. OF POST & SIZE	No. OF SIGNS (EA)
TH-2	W1-4		30x30		1-6"X6"	1
TH-4		C30A	30x30	SHOULDER CLOSED	1-6"X6"	1
TH-4		C24	30x30	SHOULDER WORK AHEAD	1-6"X6"	1
TH-5	W4-2(Lt)	W11	36x36	LANE ENDS (SYMBOL)	1-6"X6"	1
	R4-1	R63	24X30	DO NOT PASS		1
TH-5		C31A	36x36	NO SHOULDER	1-6"X6"	1
TH-6		C24	30x30	SHOULDER WORK AHEAD	1-6"X6"	1
TH-7		C30A	30x30	SHOULDER CLOSED	1-6"X6"	1
TH-7		C31A	36x36	NO SHOULDER	1-6"X6"	1
TH-8	W1-4		30x30		1-6"X6"	1
TH-8	W20-1		36x36	ROAD WORK AHEAD	1-6"X6"	1
TH-9	W1-4		30x30		1-6"X6"	1
TH-10		C30A	30x30	SHOULDER CLOSED	1-6"X6"	1
TOTAL						13

TEMPORARY CRASH CUSHION

STAGE	LOCATION	ABSORB 350 EA
1	"B" 137+44.18	1
	"B" 151+35.03	1
	SUBTOTAL	2
2	"B" 112+00.00	1
	"B" 119+02.23	1
	"B" 137+35.30	1
	"B" 139+15.05	1
	"B" 146+85.00	1
	SUBTOTAL	5
2A	"B" 138+85.86	1
	SUBTOTAL	1
	TOTAL	8

TRAFFIC HANDLING QUANTITIES
THQ-2

STATE OF CALIFORNIA - DEPARTMENT OF TRANSPORTATION
Caltrans
CONSULTANT FUNCTIONAL SUPERVISOR: ROBERT MATTHEW BROGAN
CALCULATED-DESIGNED BY: J. PANGBURN
CHECKED BY: M. BROGAN
REVISED BY
DATE REVISED

PATH: V:\Chico-55-0131-SR32 widening\CADD\Drawing\ FILE NAME: sr32_THQ1-THQ2 PLOT DATE: Dec 20, 2011-09:15:55am CAD USER: amillar

LAST REVISION 00-00-00 DATE PLOTTED => $DATE TIME PLOTTED => $TIME

Dist	COUNTY	ROUTE	POST MILES TOTAL PROJECT	SHEET No.	TOTAL SHEETS
03	But	32	10.3/11.3	65	144

R.M. Brogan 12-22-11
REGISTERED CIVIL ENGINEER DATE

DECEMBER 22, 2011
PLANS APPROVAL DATE

REGISTERED PROFESSIONAL ENGINEER
ROBERT MATTHEW BROGAN
No. 63854
Exp. 9/30/12
CIVIL
STATE OF CALIFORNIA

THE STATE OF CALIFORNIA OR ITS OFFICERS OR AGENTS SHALL NOT BE RESPONSIBLE FOR THE ACCURACY OR COMPLETENESS OF SCANNED COPIES OF THIS PLAN SHEET.

MARK THOMAS & CO., INC.
7300 FOLSOM BLVD STE 203
SACRAMENTO, CA 95826

CITY OF CHICO
CAPITAL PROJECT SERVICES
411 MAIN STREET
CHICO, CA 95927

LEGEND:

- LIMIT OF STRIPING PATTERN
- (No.) PAVEMENT DELINEATION DETAIL
- (LL) LIMIT LINE(12" WIDE WHITE THERMOPLASTIC PAVEMENT MARKING)
- (XW) CROSS WALK
- TYPE I (24') ARROW
- TYPE II ARROW
- TYPE III ARROW
- TYPE V ARROW
- B BIKE LANE PAVEMENT MARKING & ARROW SEE DETAIL ON SHEET PD-3
- O "ONLY" PAVEMENT MARKING
- DELINEATOR (CLASS I) OR OBJECT MARKER
- S=XX' DELINEATOR SPACING
- (#) STRIPING CURVE No.
- BLDS BICYCLE LOOP DETECTOR SYMBOL
- H/P HIGHWAY POST MARKER

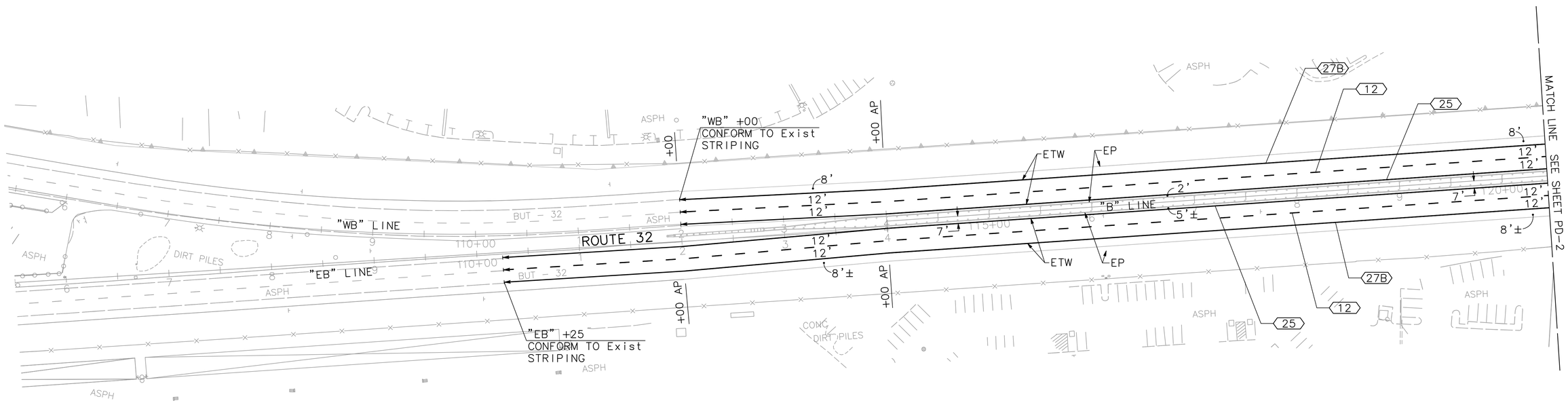

PAVEMENT DELINEATION

SCALE: 1" = 50'

PD-1

THIS PLAN ACCURATE FOR PAVEMENT DELINEATION ONLY

STATE OF CALIFORNIA - DEPARTMENT OF TRANSPORTATION
Caltrans

CONSULTANT FUNCTIONAL SUPERVISOR: ROBERT MATTHEW BROGAN
CALCULATED-DESIGNED BY: J. PANGBURN
CHECKED BY: M. BROGAN
REVISED BY
DATE REVISED

LAST REVISION 00-00-00
DATE PLOTTED => $DATE
TIME PLOTTED => $TIME

PATH: V:\Chico-55-0131-SR32 Widening\CADD\Drawing\ FILE NAME: sr32_PD1-PD4 PLOT DATE: Dec 20, 2011-09:16:55am CAD USER: amillar

BORDER LAST REVISED 7/2/2010
USERNAME => $USER
DGN FILE => $REQUEST
RELATIVE BORDER SCALE IS IN INCHES 0 1 2 3
UNIT 0000
PROJECT NUMBER & PHASE 0300000261

Dist	COUNTY	ROUTE	POST MILES TOTAL PROJECT	SHEET No.	TOTAL SHEETS
03	But	32	10.3/11.3	66	144

R.M. Brogan 12-22-11
REGISTERED CIVIL ENGINEER DATE

DECEMBER 22, 2011
PLANS APPROVAL DATE

REGISTERED PROFESSIONAL ENGINEER
ROBERT MATTHEW BROGAN
No. 63854
Exp. 9/30/12
CIVIL
STATE OF CALIFORNIA

THE STATE OF CALIFORNIA OR ITS OFFICERS OR AGENTS SHALL NOT BE RESPONSIBLE FOR THE ACCURACY OR COMPLETENESS OF SCANNED COPIES OF THIS PLAN SHEET.

MARK THOMAS & CO., INC.
7300 FOLSOM BLVD STE 203
SACRAMENTO, CA 95826

CITY OF CHICO
CAPITAL PROJECT SERVICES
411 MAIN STREET
CHICO, CA 95927

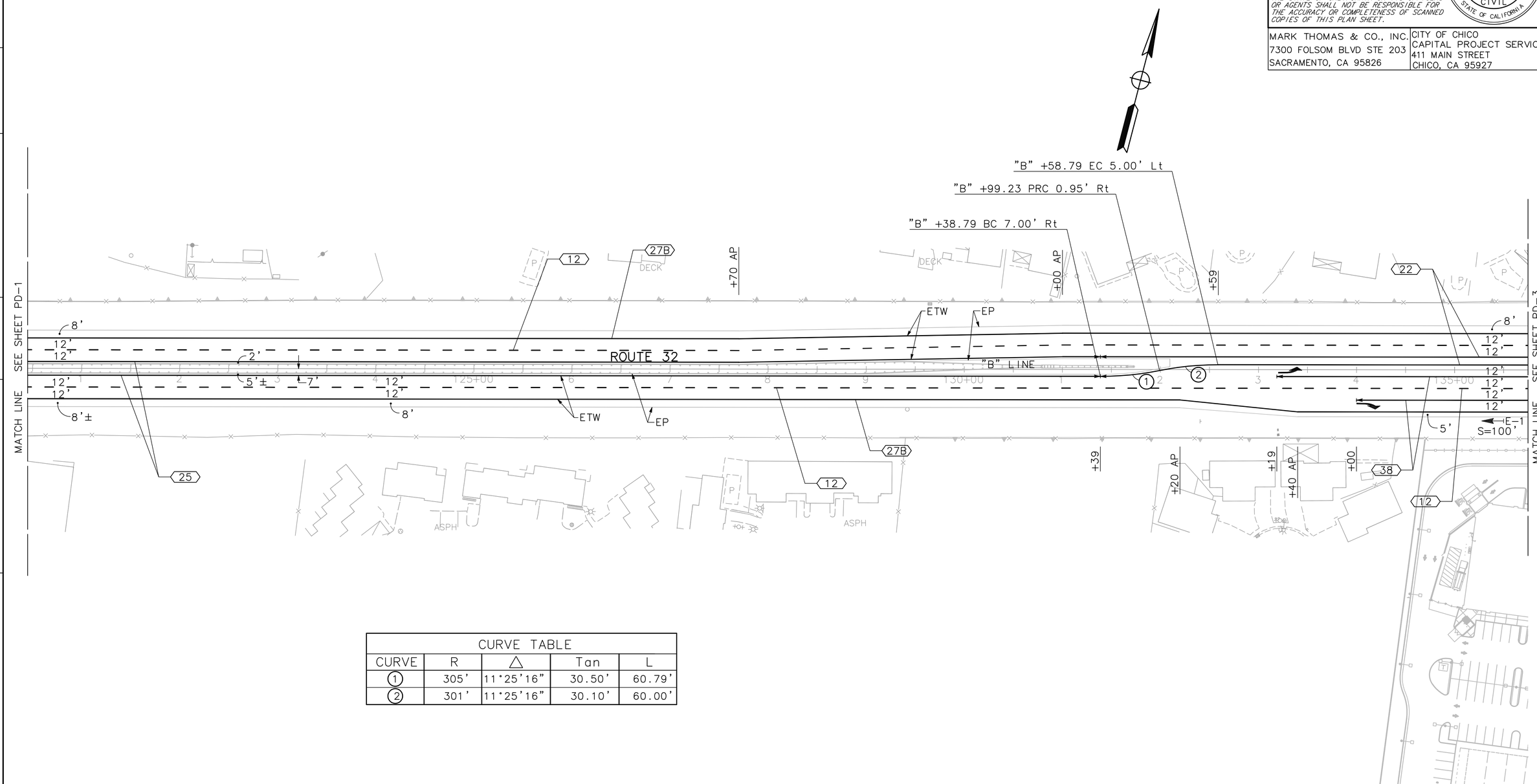

CURVE TABLE				
CURVE	R	△	Tan	L
1	305'	11°25'16"	30.50'	60.79'
2	301'	11°25'16"	30.10'	60.00'

PAVEMENT DELINEATION

SCALE: 1" = 50'

PD-2

THIS PLAN ACCURATE FOR PAVEMENT DELINEATION ONLY

STATE OF CALIFORNIA – DEPARTMENT OF TRANSPORTATION
Caltrans

CONSULTANT FUNCTIONAL SUPERVISOR: ROBERT MATTHEW BROGAN

CALCULATED-DESIGNED BY: J. PANGBURN
CHECKED BY: M. BROGAN

REVISED BY
DATE REVISED

LAST REVISION 00-00-00
DATE PLOTTED => $DATE
TIME PLOTTED => $TIME

PATH: V:\Chico-55-0131-SR32 Widening\CADD\Drawing\
FILE NAME: sr32_PD1-PD4
PLOT DATE: Dec 20, 2011-09:17:13am
CAD USER: amillar

BORDER LAST REVISED 7/2/2010
USERNAME => $USER
DGN FILE => $REQUEST
RELATIVE BORDER SCALE IS IN INCHES 0 1 2 3
UNIT 0000
PROJECT NUMBER & PHASE 0300000261

Dist	COUNTY	ROUTE	POST MILES TOTAL PROJECT	SHEET No.	TOTAL SHEETS
03	But	32	10.3/11.3	67	144

R.M. Brogan 12-22-11
REGISTERED CIVIL ENGINEER DATE

DECEMBER 22, 2011
PLANS APPROVAL DATE

REGISTERED PROFESSIONAL ENGINEER ROBERT MATTHEW BROGAN No. 63854 Exp. 9/30/12 CIVIL STATE OF CALIFORNIA

THE STATE OF CALIFORNIA OR ITS OFFICERS OR AGENTS SHALL NOT BE RESPONSIBLE FOR THE ACCURACY OR COMPLETENESS OF SCANNED COPIES OF THIS PLAN SHEET.

MARK THOMAS & CO., INC.
7300 FOLSOM BLVD STE 203
SACRAMENTO, CA 95826

CITY OF CHICO
CAPITAL PROJECT SERVICES
411 MAIN STREET
CHICO, CA 95927

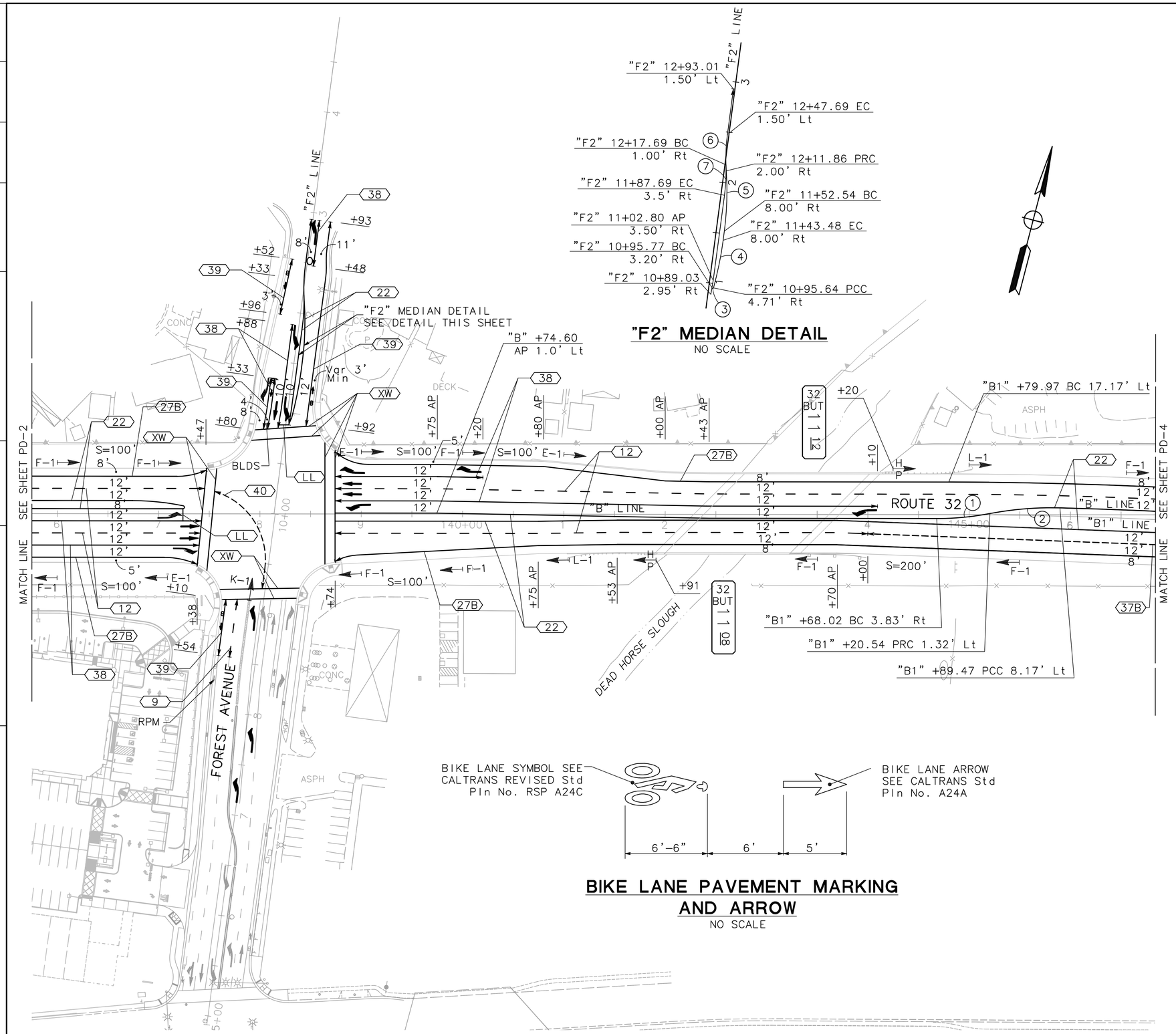

"F2" MEDIAN DETAIL
NO SCALE

BIKE LANE PAVEMENT MARKING AND ARROW
NO SCALE

CURVE TABLE				
CURVE	R	△	Tan	L
1	280'	10°48'47"	26.50'	52.84'
2	326'	12°12'35"	34.87'	69.47'
3	0.75'	174°24'08"	15.34'	2.28'
4	350'	07°51'21"	24.03'	47.98'
5	300'	11°24'12"	29.95'	59.70'
6	181.25'	11°24'12"	18.09'	36.07'
7	181.25'	09°31'38"	15.10'	30.13'

PAVEMENT DELINEATION
SCALE: 1" = 50'

PD-3

THIS PLAN ACCURATE FOR PAVEMENT DELINEATION ONLY

STATE OF CALIFORNIA – DEPARTMENT OF TRANSPORTATION
Caltrans

CONSULTANT FUNCTIONAL SUPERVISOR: ROBERT MATTHEW BROGAN
CALCULATED-DESIGNED BY: J. PANGBURN
CHECKED BY: M. BROGAN
REVISED BY
DATE REVISED

LAST REVISION 00-00-00
DATE PLOTTED => $DATE
TIME PLOTTED => $TIME

PATH: V:\Chico-55-0131-SR32 Widening\CADD\Drawing\ FILE NAME: sr32_PD1-PD4 PLOT DATE: Dec 20, 2011-10:34:21am CAD USER: amillar

BORDER LAST REVISED 7/2/2010 | USERNAME => $USER | DGN FILE => $REQUEST | RELATIVE BORDER SCALE IS IN INCHES 0 1 2 3 | UNIT 0000 | PROJECT NUMBER & PHASE 0300000261

Dist	COUNTY	ROUTE	POST MILES TOTAL PROJECT	SHEET No.	TOTAL SHEETS
03	But	32	10.3/11.3	68	144

R.M. Brogan 12-22-11
REGISTERED CIVIL ENGINEER DATE

DECEMBER 22, 2011
PLANS APPROVAL DATE

REGISTERED PROFESSIONAL ENGINEER
ROBERT MATTHEW BROGAN
No. 63854
Exp. 9/30/12
CIVIL
STATE OF CALIFORNIA

THE STATE OF CALIFORNIA OR ITS OFFICERS OR AGENTS SHALL NOT BE RESPONSIBLE FOR THE ACCURACY OR COMPLETENESS OF SCANNED COPIES OF THIS PLAN SHEET.

MARK THOMAS & CO., INC.
7300 FOLSOM BLVD STE 203
SACRAMENTO, CA 95826

CITY OF CHICO
CAPITAL PROJECT SERVICES
411 MAIN STREET
CHICO, CA 95927

NOTE:

1. ALL CROSSWALKS IN THE ROUTE 32 AND EL MONTE AVENUE INTERSECTION SHALL BE YELLOW.

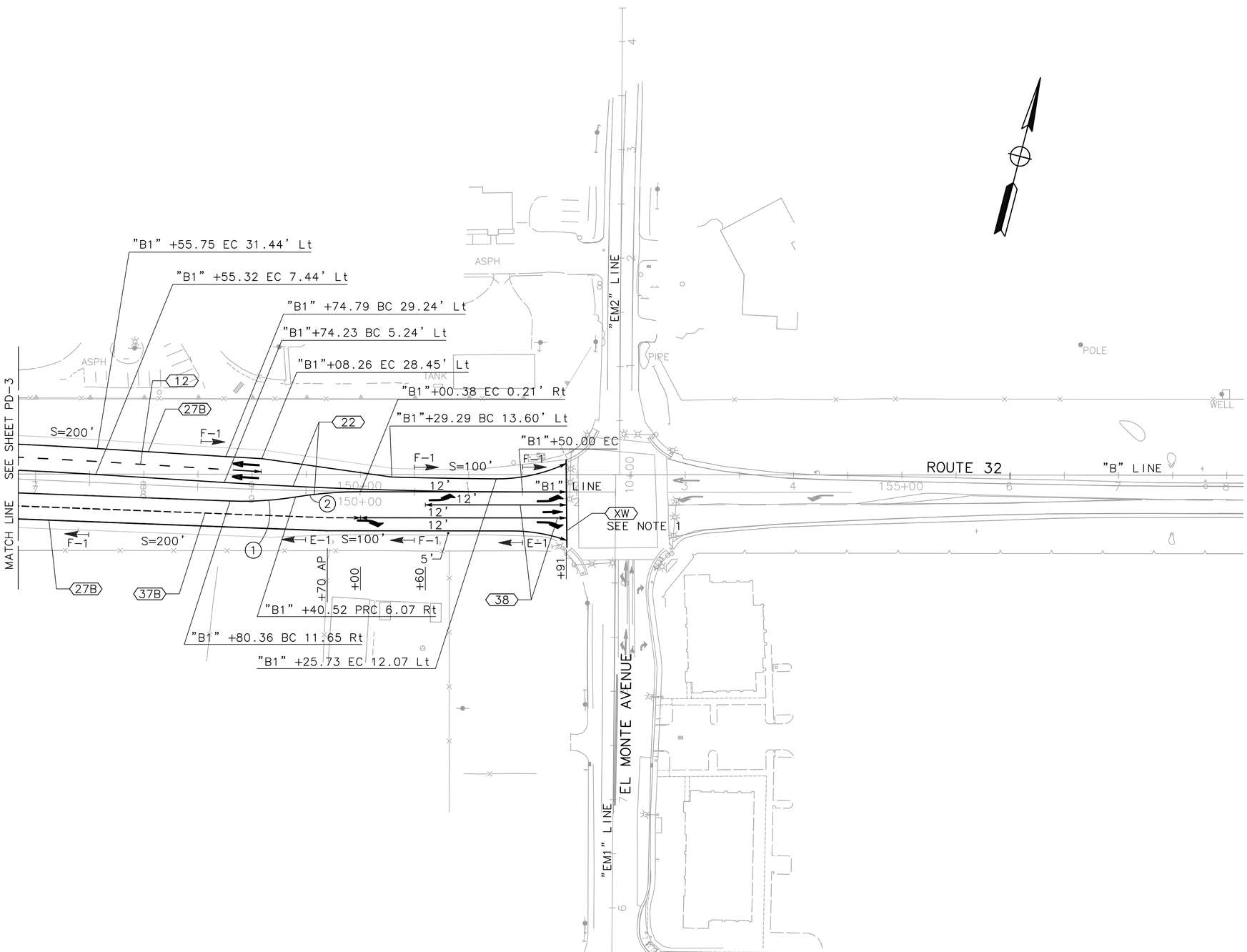

CURVE TABLE				
CURVE	R	△	Tan	L
1	304.50'	11°24'33"	30.42'	60.63'
2	371.50'	09°17'36"	30.19'	60.25'

PAVEMENT DELINEATION

SCALE: 1" = 50'

PD-4

THIS PLAN ACCURATE FOR PAVEMENT DELINEATION ONLY

STATE OF CALIFORNIA – DEPARTMENT OF TRANSPORTATION
Caltrans

CONSULTANT FUNCTIONAL SUPERVISOR: ROBERT MATTHEW BROGAN
CALCULATED-DESIGNED BY: J. PANGBURN
CHECKED BY: M. BROGAN
REVISED BY
DATE REVISED

LAST REVISION 00-00-00
DATE PLOTTED => $DATE
TIME PLOTTED => $TIME

PATH: V:\Chico-55-0131-SR32 Widening\CADD\Drawing\ FILE NAME: sr32_PD1-PD4 PLOT DATE: Dec 20, 2011-09:17:33am CAD USER: amillar

BORDER LAST REVISED 7/2/2010 | USERNAME => $USER | DGN FILE => $REQUEST | RELATIVE BORDER SCALE IS IN INCHES 0 1 2 3 | UNIT 0000 | PROJECT NUMBER & PHASE 0300000261

Dist	COUNTY	ROUTE	POST MILES TOTAL PROJECT	SHEET No.	TOTAL SHEETS
03	But	32	10.3/11.3	69	144

R.M. Brogan 12-22-11
REGISTERED CIVIL ENGINEER DATE

DECEMBER 22, 2011
PLANS APPROVAL DATE

REGISTERED PROFESSIONAL ENGINEER ROBERT MATTHEW BROGAN No. 63854 Exp. 9/30/12 CIVIL STATE OF CALIFORNIA

THE STATE OF CALIFORNIA OR ITS OFFICERS OR AGENTS SHALL NOT BE RESPONSIBLE FOR THE ACCURACY OR COMPLETENESS OF SCANNED COPIES OF THIS PLAN SHEET.

MARK THOMAS & CO., INC.
7300 FOLSOM BLVD STE 203
SACRAMENTO, CA 95826

CITY OF CHICO
CAPITAL PROJECT SERVICES
411 MAIN STREET
CHICO, CA 95927

PAVEMENT DELINEATION QUANTITIES

STATION:	SHEET NO.	LINE NAME	THERMOPLASTIC TRAFFIC STRIPE									PAVEMENT MARKER (RETROREFLECTIVE)			THERMOPLASTIC PAVEMENT MARKING						DELINEATOR TYPICAL MOUNT			OBJECT MARKER		HIGHWAY POST MARKER
															ARROW TYPE			WORDS	BIKE LANE	LIMIT LINE & CROSS-WALK						
			9	12	22	25	27B	37B	38	39	40	TYPE D	TYPE G	TYPE H	I	III	V				TYPE E-1	TYPE F-1	TYPE G-1	TYPE K-1	TYPE L-1	
			LF	LF	LF	LF	LF	LF	LF	LF	LF	EA	EA	EA	SF	SF	SF	SF	SF	SF	EA	EA	EA	EA	EA	EA
"WB" 112+00 TO "B" 120+45	PD-1	WB/B					845																			
"WB" 112+00 TO "B" 120+45	PD-1	WB/B		845									19													
"WB" 112+00 TO "B" 120+45	PD-1	WB/B				845								19												
"EB" 110+25 TO "B" 120+45	PD-1	EB/B					1021																			
"EB" 110+25 TO "B" 120+45	PD-1	EB/B				1020								23												
"EB" 110+25 TO "B" 120+45	PD-1	EB/B		1020									23													
"B" 120+45 TO "B" 135+75	PD-2	B					3062									84										
"B" 120+45 TO "B" 135+75	PD-2	B		3061									66													
"B" 120+45 TO "B" 131+39	PD-2	B				2189								48												
"B" 131+39 TO "B" 135+75	PD-2	B			1746							78														
"B" 133+19 TO "B" 135+75	PD-2	B							432				21								1					
"B" 135+75 TO "B" 137+47	PD-3	B		338									10		62	84					1					
"B" 135+75 TO "B" 137+47	PD-3	B							334				16									3				
"B" 135+75 TO "B" 137+47	PD-3	B					339																			
"B" 135+75 TO "B" 137+47	PD-3	B			608							28														
"B" 137+47 TO "B" 138+74	PD-3	B																		446						
"B" 137+55 TO "B" 138+02	PD-3	B									119															
"B" 138+74 TO "B1" 146+84	PD-3	B/B1					1626								62	168					2				2	2
"B" 138+74 TO "B1" 146+84	PD-3	B/B1			3242							140										6				
"B" 138+74 TO "B1" 146+84	PD-3	B/B1		1336									30													
"B" 138+74 TO "B" 144+10	PD-3	B							682				32													
"B1" 144+00 TO B1" 146+84	PD-3	B1						285					21													
"F1" 8+54 TO "F1" 9+12	PD-3	F1								56									14							
"F1" 8+54 TO "F1" 9+19	PD-3	F1	58										3			126				153				1		
"F2" 10+80 TO "F2" 12+93	PD-3	F2							201				13		31	168		22	42	11						
"F2" 10+80 TO "F2" 12+93	PD-3	F2			658							32														
"F2" 10+69 TO "F2" 12+93	PD-3	F2								312										128						
"B1" 146+84 TO "B1" 151+91	PD-4	B1					1018								31	168	66				2					
"B1" 146+84 TO "B1" 149+10	PD-4	B1		225									6									5				
"B1" 146+84 TO "B1" 151+91	PD-4	B1			1948							86														
"B1" 146+84 TO "B1" 150+00	PD-4	B1						316					24													
"B1" 150+00 TO "B1" 151+91	PD-4	B1							322				16													
"B1" 151+91	PD-4	B1																		81						
GRAND TOTAL			58	6825	8202	4054	7911	601	1971	368	119	364	300	90	186	798	66	22	56	819	6	14	0	1	2	2
SUMMARY			30109									754			1947						20			3		2

PAVEMENT DELINEATION QUANTITIES
PDQ-1

STATE OF CALIFORNIA - DEPARTMENT OF TRANSPORTATION
Caltrans

CONSULTANT FUNCTIONAL SUPERVISOR: ROBERT MATTHEW BROGAN
CALCULATED-DESIGNED BY: J. PANGBURN
CHECKED BY: M. BROGAN
REVISED BY
DATE REVISED

LAST REVISION 00-00-00
DATE PLOTTED => $DATE
TIME PLOTTED => $TIME

PATH: V:\Chico-55-0131-SR32 widening\CADD\Drawing\ FILE NAME: sr32_PDQ1 PLOT DATE: Dec 20, 2011-09:18:20am CAD USER: amillar

Dist	COUNTY	ROUTE	POST MILES TOTAL PROJECT	SHEET No.	TOTAL SHEETS
03	But	32	10.3/11.3	70	144

R.M. Brogan 12-22-11
REGISTERED CIVIL ENGINEER DATE

DECEMBER 22, 2011
PLANS APPROVAL DATE

REGISTERED PROFESSIONAL ENGINEER
ROBERT MATTHEW BROGAN
No. 63854
Exp. 9/30/12
CIVIL
STATE OF CALIFORNIA

THE STATE OF CALIFORNIA OR ITS OFFICERS OR AGENTS SHALL NOT BE RESPONSIBLE FOR THE ACCURACY OR COMPLETENESS OF SCANNED COPIES OF THIS PLAN SHEET.

MARK THOMAS & CO., INC.
7300 FOLSOM BLVD STE 203
SACRAMENTO, CA 95826

CITY OF CHICO
CAPITAL PROJECT SERVICES
411 MAIN STREET
CHICO, CA 95927

NOTES:

1. ALL SIGN CODES ARE FEDERAL SIGN CODES UNLESS OTHERWISE DESIGNATED AS CALIFORNIA SIGN CODES.
2. LOCATION AND POSITION OF ROADSIDE SIGNS ARE APPROXIMATE. EXACT LOCATION AND POSITION WILL BE DETERMINED BY THE ENGINEER.
3. ALL SIGNS NOT SHOWN FOR RELOCATION SHALL REMAIN IN PLACE.

LEGEND:

- ● REMOVE ROADSIDE SIGN
- ▲ RELOCATE ROADSIDE SIGN
- ROADSIDE SIGN SINGLE POST
- ROADSIDE SIGN DOUBLE POST
- SIGNAL MAST ARM MOUNTED SIGN (SEE ELECTRICAL SHEETS FOR INSTALLATION)
- ROADSIDE SIGN SSBM
- ROADSIDE SIGN NUMBER
- EXISTING ROADSIDE SIGN
- <CA> CALIFORNIA SIGN CODE
- ✳ INSTALL ROADSIDE SIGN
- ■ ROADSIDE SIGN TO REMAIN

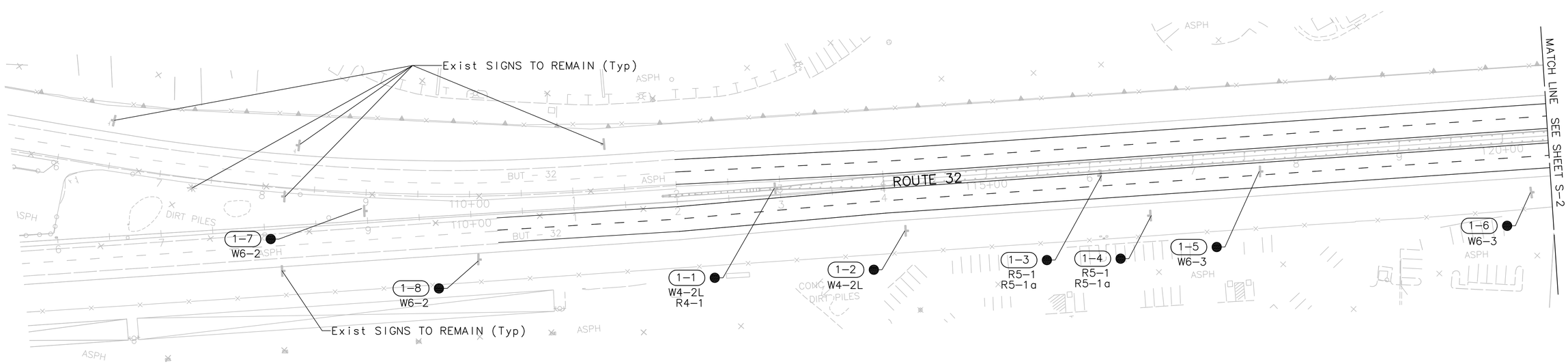

SIGN PLAN

SCALE: 1" = 50'

S-1

THIS PLAN ACCURATE FOR SIGN WORK ONLY

STATE OF CALIFORNIA - DEPARTMENT OF TRANSPORTATION
Caltrans

CONSULTANT FUNCTIONAL SUPERVISOR: ROBERT MATTHEW BROGAN

CALCULATED-DESIGNED BY: J. PANGBURN
CHECKED BY: M. BROGAN

REVISED BY
DATE REVISED

PATH: V:\Chico-55-0131-SR32 Widening\CADD\Drawing\ FILE NAME: sr32_S1-S4 PLOT DATE: Dec 20, 2011-09:19:10am CAD USER: amillar

LAST REVISION 00-00-00 DATE PLOTTED => $DATE TIME PLOTTED => $TIME

BORDER LAST REVISED 7/2/2010 | USERNAME => $USER DGN FILE => $REQUEST | RELATIVE BORDER SCALE IS IN INCHES 0 1 2 3 | UNIT 0000 | PROJECT NUMBER & PHASE 0300000261

Dist	COUNTY	ROUTE	POST MILES TOTAL PROJECT	SHEET No.	TOTAL SHEETS
03	But	32	10.3/11.3	71	144

R.M. Brogan 12-22-11
REGISTERED CIVIL ENGINEER DATE

DECEMBER 22, 2011
PLANS APPROVAL DATE

REGISTERED PROFESSIONAL ENGINEER
ROBERT MATTHEW BROGAN
No. 63854
Exp. 9/30/12
CIVIL
STATE OF CALIFORNIA

THE STATE OF CALIFORNIA OR ITS OFFICERS OR AGENTS SHALL NOT BE RESPONSIBLE FOR THE ACCURACY OR COMPLETENESS OF SCANNED COPIES OF THIS PLAN SHEET.

MARK THOMAS & CO., INC.
7300 FOLSOM BLVD STE 203
SACRAMENTO, CA 95826

CITY OF CHICO
CAPITAL PROJECT SERVICES
411 MAIN STREET
CHICO, CA 95927

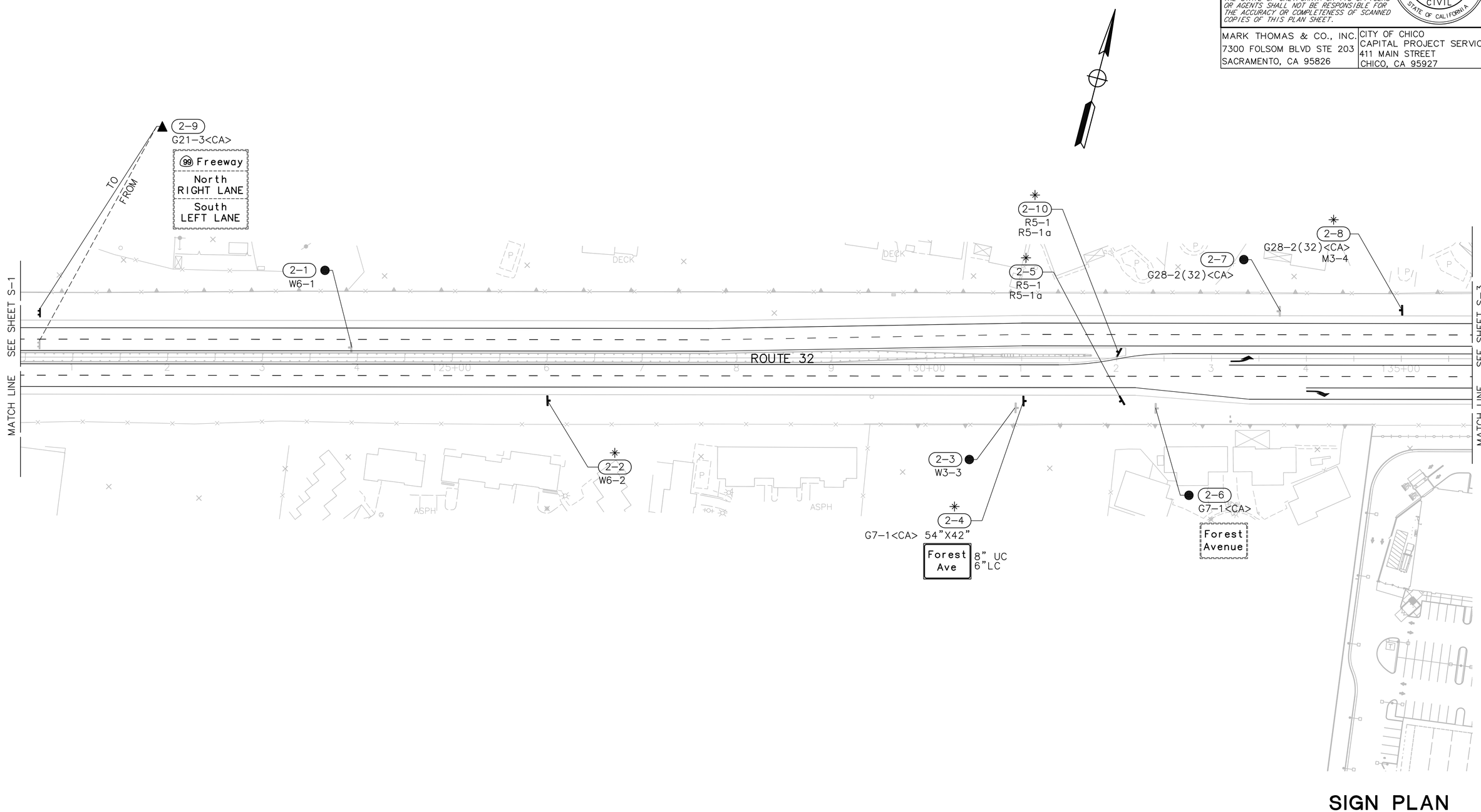

SIGN PLAN

SCALE: 1" = 50'

S-2

THIS PLAN ACCURATE FOR SIGN WORK ONLY

STATE OF CALIFORNIA - DEPARTMENT OF TRANSPORTATION
Caltrans

CONSULTANT FUNCTIONAL SUPERVISOR: ROBERT MATTHEW BROGAN
CALCULATED-DESIGNED BY: J. PANGBURN
CHECKED BY: M. BROGAN
REVISED BY
DATE REVISED

PATH: V:\Chico-55-0131-SR32 Widening\CADD\Drawing\ FILE NAME: sr32_S1-S4 PLOT DATE: Dec 20, 2011-09:19:30am CAD USER: amillar

LAST REVISION 00-00-00 | DATE PLOTTED => $DATE | TIME PLOTTED => $TIME

BORDER LAST REVISED 7/2/2010 | USERNAME => $USER | DGN FILE => $REQUEST | RELATIVE BORDER SCALE IS IN INCHES 0 1 2 3 | UNIT 0000 | PROJECT NUMBER & PHASE 0300000261

Dist	COUNTY	ROUTE	POST MILES TOTAL PROJECT	SHEET No.	TOTAL SHEETS
03	But	32	10.3/11.3	72	144

R.M. Brogan 12-22-11
REGISTERED CIVIL ENGINEER DATE

DECEMBER 22, 2011
PLANS APPROVAL DATE

REGISTERED PROFESSIONAL ENGINEER ROBERT MATTHEW BROGAN No. 63854 Exp. 9/30/12 CIVIL STATE OF CALIFORNIA

THE STATE OF CALIFORNIA OR ITS OFFICERS OR AGENTS SHALL NOT BE RESPONSIBLE FOR THE ACCURACY OR COMPLETENESS OF SCANNED COPIES OF THIS PLAN SHEET.

MARK THOMAS & CO., INC.
7300 FOLSOM BLVD STE 203
SACRAMENTO, CA 95826

CITY OF CHICO
CAPITAL PROJECT SERVICES
411 MAIN STREET
CHICO, CA 95927

NOTE:
1. SEE ELECTRICAL SHEETS FOR INSTALLATION.

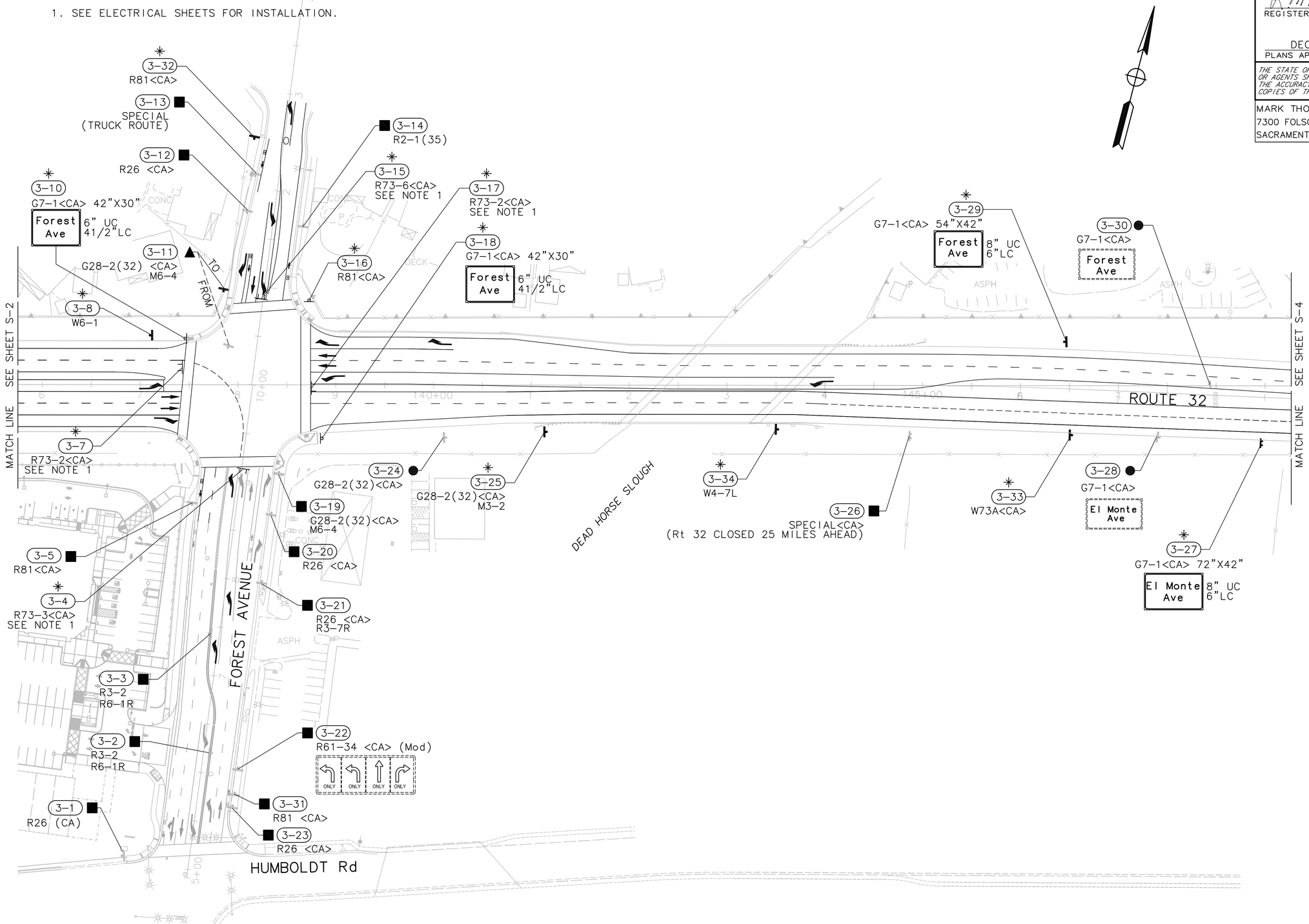

SIGN PLAN

SCALE: 1" = 50'

S-3

THIS PLAN ACCURATE FOR SIGN WORK ONLY

STATE OF CALIFORNIA – DEPARTMENT OF TRANSPORTATION

Caltrans

CONSULTANT FUNCTIONAL SUPERVISOR: ROBERT MATTHEW BROGAN

CALCULATED-DESIGNED BY: J. PANGBURN

CHECKED BY: M. BROGAN

REVISED BY

DATE REVISED

LAST REVISION 00-00-00

DATE PLOTTED => $DATE
TIME PLOTTED => $TIME

PATH: V:\Chico-55-0131-SR32 Widening\CADD\Drawing\ FILE NAME: sr32_S1-S4 PLOT DATE: Dec 20, 2011-10:35:31am CAD USER: amillar

BORDER LAST REVISED 7/2/2010

USERNAME => $USER
DGN FILE => $REQUEST

RELATIVE BORDER SCALE IS IN INCHES 0 1 2 3

UNIT 0000

PROJECT NUMBER & PHASE 0300000261

Dist	COUNTY	ROUTE	POST MILES TOTAL PROJECT	SHEET No.	TOTAL SHEETS
03	But	32	10.3/11.3	73	144

R.M. Brogan 12-22-11
REGISTERED CIVIL ENGINEER DATE

DECEMBER 22, 2011
PLANS APPROVAL DATE

REGISTERED PROFESSIONAL ENGINEER
ROBERT MATTHEW BROGAN
No. 63854
Exp. 9/30/12
CIVIL
STATE OF CALIFORNIA

THE STATE OF CALIFORNIA OR ITS OFFICERS OR AGENTS SHALL NOT BE RESPONSIBLE FOR THE ACCURACY OR COMPLETENESS OF SCANNED COPIES OF THIS PLAN SHEET.

MARK THOMAS & CO., INC.
7300 FOLSOM BLVD STE 203
SACRAMENTO, CA 95826

CITY OF CHICO
CAPITAL PROJECT SERVICES
411 MAIN STREET
CHICO, CA 95927

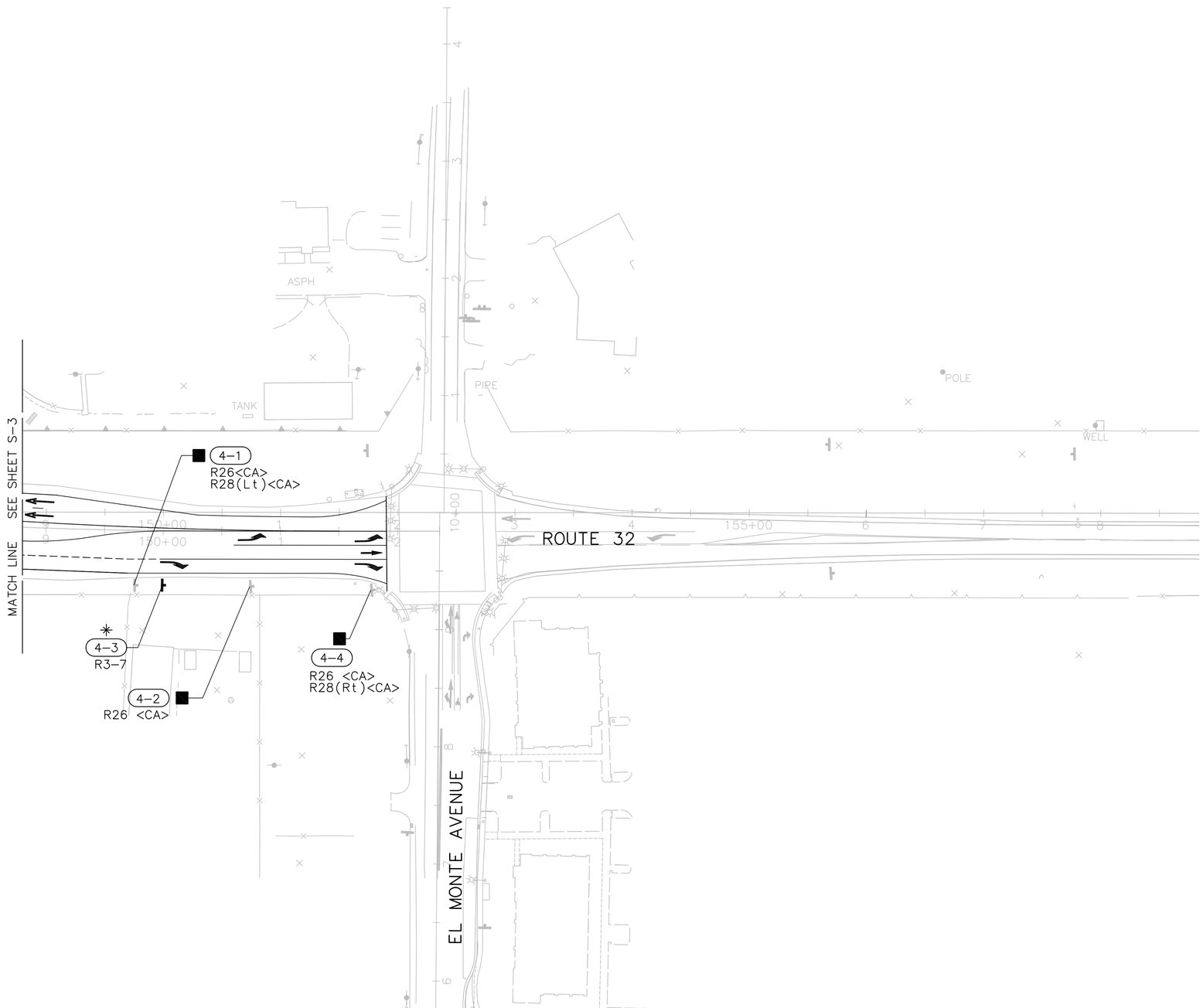

SIGN PLAN

SCALE: 1" = 50'

S-4

THIS PLAN ACCURATE FOR SIGN WORK ONLY

STATE OF CALIFORNIA - DEPARTMENT OF TRANSPORTATION
Caltrans

CONSULTANT FUNCTIONAL SUPERVISOR: ROBERT MATTHEW BROGAN
CALCULATED-DESIGNED BY: J. PANGBURN
CHECKED BY: M. BROGAN
REVISED BY
DATE REVISED

PATH: V:\Chico-55-0131-SR32 Widening\CADD\Drawing\ FILE NAME: sr32_S1-S4 PLOT DATE: Dec 20, 2011-09:19:47am CAD USER: amillar

LAST REVISION 00-00-00 DATE PLOTTED => $DATE TIME PLOTTED => $TIME

BORDER LAST REVISED 7/2/2010 | USERNAME => $USER DGN FILE => $REQUEST | RELATIVE BORDER SCALE IS IN INCHES 0 1 2 3 | UNIT 0000 | PROJECT NUMBER & PHASE 0300000261

Dist	COUNTY	ROUTE	POST MILES TOTAL PROJECT	SHEET No.	TOTAL SHEETS
03	But	32	10.3/11.3	74	144

R.M. Brogan 12-22-11
REGISTERED CIVIL ENGINEER DATE

DECEMBER 22, 2011
PLANS APPROVAL DATE

REGISTERED PROFESSIONAL ENGINEER
ROBERT MATTHEW BROGAN
No. 63854
Exp. 9/30/12
CIVIL
STATE OF CALIFORNIA

THE STATE OF CALIFORNIA OR ITS OFFICERS OR AGENTS SHALL NOT BE RESPONSIBLE FOR THE ACCURACY OR COMPLETENESS OF SCANNED COPIES OF THIS PLAN SHEET.

MARK THOMAS & CO., INC.
7300 FOLSOM BLVD STE 203
SACRAMENTO, CA 95826

CITY OF CHICO
CAPITAL PROJECT SERVICES
411 MAIN STREET
CHICO, CA 95927

ROADSIDE SIGN QUANTITIES

SIGN NUMBER Sht-No.	FEDERAL CODE	CALIFORNIA CODE	PANEL SIZE (in)	"C" DIM IN FEET	POST SIZE AND LENGTH (N) 4"x4"	4"x6"	6"x6"	6"x8"	ROADSIDE SIGN ONE POST EA	TWO POST EA	INSTALL SIGN (SSBM) EA	REMOVE ROADSIDE SIGN EA	RELOCATE ROADSIDE SIGN EA	REMARKS
1-1	W4-2L	W11(Lt)										1		
	R4-1	R63												
1-2	W4-2L	WI1(Lt)										1		
1-3	R5-1	R11										1		
	R5-1a	R11A												
1-4	R5-1	R11										1		
	R5-1a	R11A												
1-5	W6-3	W44										1		
1-6	W6-3	W44										1		
1-7	W6-2	W26										1		
1-8	W6-2	W26										1		
2-1	W6-1	W25										1		
2-2	W6-2	W26	48x48	7			17'		1					
2-3	W3-3	W4-1										1		
2-4		G7-1	54x42	7			17'		1					
2-5	R5-1	R11	36x36	4		14'			1					
	R5-1a	R11A	36x24											
2-6		G7-1										1		
2-7		G28-2(32)										1		
2-8		G28-2(32)	24x25	5		14'			1					
	M3-4	G50	24x12											
2-9		G21-3											1	
2-10	R5-1	R11	36x36	4		14'			1					
	R5-1A	R11A	36x24											
3-1		R26												SIGN TO REMAIN
3-2	R3-2	R17												SIGN TO REMAIN
	R6-1R	R10(Rt)												
3-3	R3-2	R17												SIGN TO REMAIN
	R6-1R	R10(Rt)												
3-4		R73-3	36x36											SEE NOTES 4 AND 5
3-5		R81												SIGN TO REMAIN
3-6	SIGN No. NOT USED													
3-7		R73-2	36x36											SEE NOTES 4 AND 5
3-8	W6-1	W25	48x48	7			17'		1					
3-9	SIGN No. NOT USED													
SHEET TOTAL									6	0	0	12	1	

NOTES:
1. EXACT LOCATION AND POSITION OF ROADSIDE SIGNS TO BE DETERMINED BY THE EINGINEER.
2. POST LENGTHS GIVEN ARE APPROXIMATE.
3. "C"=VERTICAL CLEARANCE EP TO BOTTOM OF SIGN PANEL.
4. (N) - NOT A SEPARATE PAY ITEM. FOR INFORMATION ONLY.
5. SIGN PANEL TO BE MOUNTED ON SIGNAL MAST ARM.
6. SIGN PANEL TO BE MOUNTED ON SIGNAL STANDARD.
7. SIGN PANEL TO BE MOUNTED ON SIGNAL STANDARD DIRECTLY ABOVE THE SIGNAL MAST ARM CONNECTION.

SIGN QUANTITIES
SQ-1

REVISED BY | DATE REVISED
J. PANGBURN | M. BROGAN
CALCULATED-DESIGNED BY | CHECKED BY
CONSULTANT FUNCTIONAL SUPERVISOR
ROBERT MATTHEW BROGAN
STATE OF CALIFORNIA - DEPARTMENT OF TRANSPORTATION
Caltrans

PATH: V:\Chico-55-0131-SR32 Widening\CADD\Drawing\ FILE NAME: sr32_SQ1-SQ3 PLOT DATE: Dec 20, 2011-09:20:53am CAD USER: amillar

LAST REVISION 00-00-00 | DATE PLOTTED => $DATE | TIME PLOTTED => $TIME

Dist	COUNTY	ROUTE	POST MILES TOTAL PROJECT	SHEET No.	TOTAL SHEETS
03	But	32	10.3/11.3	75	144

R.M. Brogan 12-22-11
REGISTERED CIVIL ENGINEER DATE

DECEMBER 22, 2011
PLANS APPROVAL DATE

REGISTERED PROFESSIONAL ENGINEER ROBERT MATTHEW BROGAN No. 63854 Exp. 9/30/12 CIVIL STATE OF CALIFORNIA

THE STATE OF CALIFORNIA OR ITS OFFICERS OR AGENTS SHALL NOT BE RESPONSIBLE FOR THE ACCURACY OR COMPLETENESS OF SCANNED COPIES OF THIS PLAN SHEET.

MARK THOMAS & CO., INC.
7300 FOLSOM BLVD STE 203
SACRAMENTO, CA 95826

CITY OF CHICO
CAPITAL PROJECT SERVICES
411 MAIN STREET
CHICO, CA 95927

ROADSIDE SIGN QUANTITIES

SIGN NUMBER Sht-No.	FEDERAL CODE	CALIFORNIA CODE	PANEL SIZE (in)	"C" DIM IN FEET	POST SIZE AND LENGTH (N) 4"x4"	4"x6"	6"x6"	6"x8"	ROADSIDE SIGN ONE POST EA	TWO POST EA	INSTALL SIGN (SSBM) EA	REMOVE ROADSIDE SIGN EA	RELOCATE ROADSIDE SIGN EA	REMARKS
3-10		G7-1	42x30								1			SEE NOTE 7
3-11		G28-2(32)											1	
	M6-4	G35												
3-12		R26												SIGN TO REMAIN
3-13														SPECIAL (TRUCK ROUTE) SIGN TO REMAIN
3-14	R2-1(35)	R2(35)												SIGN TO REMAIN
3-15		R73-6	36x36											SEE NOTES 4 AND 5
3-16		R81	24x18								1			SEE NOTE 6
3-17		R73-2	36x36											SEE NOTES 4 AND 5
3-18		G7-1	42x30								1			SEE NOTE 7
3-19		G28-2(32)												SIGN TO REMAIN
	M6-4	G35												
3-20		R26												SIGN TO REMAIN
3-21		R26												SIGN TO REMAIN
	R3-7R	R18(Rt)												
3-22		R61-34(Mod)												SIGN TO REMAIN
3-23		R26												SIGN TO REMAIN
3-24		G28-2(32)										1		
3-25		G28-2(32)	24x25	5		14'			1					
	M3-2	G49	24x12											
3-26														SIGN TO REMAIN (Rt 32 CLOSED)
3-27		G7-1	72x42	7		16'				1				
3-28		G7-1										1		
3-29		G7-1	54x42	7			17'		1					
3-30		G7-1										1		
3-31		R81												SIGN TO REMAIN
3-32		R81	24x18	7	12'				1					
3-33		W73A	48x48	7			17'		1					
3-34	W4-7L	W74(Lt)	48x48	7			17'		1					
4-1		R26												SIGN TO REMAIN
		R28(Lt)												
4-2		R26												SIGN TO REMAIN
4-3	R3-7R	R18(Rt)	30x30	7		15'			1					
4-4		R26												SIGN TO REMAIN
		R28(Rt)												
SHEET TOTAL									6	1	3	3	1	
GRAND TOTAL									12	1	3	15	2	

SIGN QUANTITIES
SQ-2

STATE OF CALIFORNIA - DEPARTMENT OF TRANSPORTATION
Caltrans
CONSULTANT FUNCTIONAL SUPERVISOR: ROBERT MATTHEW BROGAN
CALCULATED-DESIGNED BY: J. PANGBURN
CHECKED BY: M. BROGAN
REVISED BY
DATE REVISED

PATH: V:\Chico-55-0131-SR32 Widening\CADD\Drawing\ FILE NAME: sr32_SQ1-SQ3 PLOT DATE: Dec 20, 2011-09:21:12am CAD USER: amillar

LAST REVISION 00-00-00 | DATE PLOTTED => $DATE | TIME PLOTTED => $TIME

BORDER LAST REVISED 7/2/2010 | USERNAME => $USER | DGN FILE => $REQUEST | RELATIVE BORDER SCALE IS IN INCHES 0 1 2 3 | UNIT 0000 | PROJECT NUMBER & PHASE 0300000261

Dist	COUNTY	ROUTE	POST MILES TOTAL PROJECT	SHEET No.	TOTAL SHEETS
03	But	32	10.3/11.3	76	144

R.M. Brogan 12-22-11
REGISTERED CIVIL ENGINEER DATE

DECEMBER 22, 2011
PLANS APPROVAL DATE

REGISTERED PROFESSIONAL ENGINEER ROBERT MATTHEW BROGAN No. 63854 Exp. 9/30/12 CIVIL STATE OF CALIFORNIA

THE STATE OF CALIFORNIA OR ITS OFFICERS OR AGENTS SHALL NOT BE RESPONSIBLE FOR THE ACCURACY OR COMPLETENESS OF SCANNED COPIES OF THIS PLAN SHEET.

MARK THOMAS & CO., INC.
7300 FOLSOM BLVD STE 203
SACRAMENTO, CA 95826

CITY OF CHICO
CAPITAL PROJECT SERVICES
411 MAIN STREET
CHICO, CA 95927

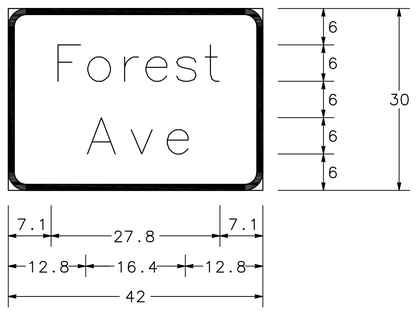

G7-1<CA>

(3-10) (3-18)

1.0" BORDER WITH 3" RADIUS
"Forest" E Mod; "Ave" E Mod

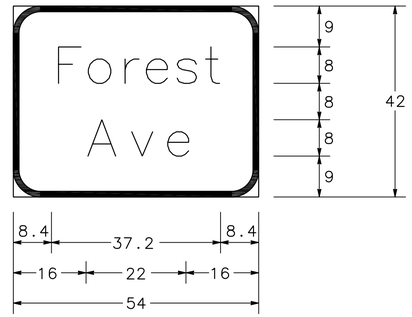

G7-1<CA>

(2-4) (3-29)

1.25" BORDER WITH 6" RADIUS
"Forest" E Mod; "Ave" E Mod

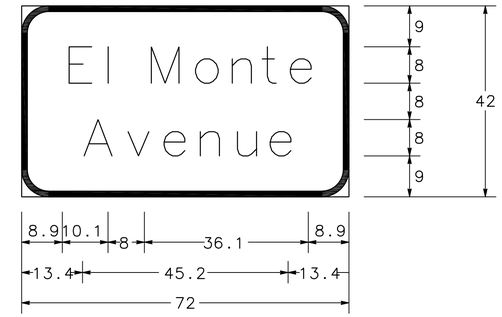

G7-1<CA>

(3-27)

1.25" BORDER WITH 6" RADIUS
"El Monte" E Mod; "Avenue" E Mod

NOTE: ALL SIGN PANEL DIMENSIONS ARE IN INCHES.

ROADSIDE SIGN PANELS

SIGN CODE	No. OF SIGNS	SIGN SIZE L X D (in x in)	SIGN AREA SQFT	SINGLE FACED	BACKGROUND SHEETING COLOR	BACKGROUND RETROREFLECTIVE ASTM TYPE	LEGEND SHEETING COLOR	LEGEND RETROREFLECTIVE ASTM TYPE	PROTECTIVE OVERLAY PREMIUM	FURNISH SINGLE SHEET ALUMINUM SIGN TOTAL AREA (SQFT) UNFRAMED 0.063"	UNFRAMED 0.08"	FRAMED 0.063"	DESCRIPTION (REMARKS)
G7-1<CA>	2	42x30	8.75	X	GREEN	IV	WHITE	IX	X		17.50		FOREST AVE
G7-1<CA>	2	54x42	15.75	X	GREEN	IV	WHITE	IX	X		31.50		FOREST AVE
G7-1<CA>	1	72x42	21.00	X	GREEN	IV	WHITE	IX	X			21.00	EL MONTE AVE
G28-2(32) <CA>	2	24x25	4.17	X	GREEN	III	WHITE	III	X	8.34			CALIFORNIA 32 (ROUTE MARKER)
M3-2	1	24x12	2.00	X	GREEN	III	WHITE	III	X	2.00			EAST
M3-4	1	24x12	2.00	X	GREEN	III	WHITE	III	X	2.00			WEST
R3-7R	1	30x30	6.25	X	WHITE	III	BLACK	–	X	6.25			RIGHT LANE MUST TURN RIGHT
R5-1	2	36x36	9.00	X	RED	IX	WHITE	IX	X	18.00			DO NOT ENTER
R5-1a	2	36x24	6.00	X	RED	IX	WHITE	IX	X	12.00			WRONG WAY
R73-2 <CA>	2	36x36	9.00	X	WHITE	III	BLACK	–	X	18.00			INTERSECTION LANE CONTROL
R73-3 <CA>	1	36x36	9.00	X	WHITE	III	BLACK	–	X	9.00			INTERSECTION LANE CONTROL
R73-6 <CA>	1	36x36	9.00	X	WHITE	III	BLACK	–	X	9.00			INTERSECTION LANE CONTROL
R81 <CA>	2	24x18	3.00	X	WHITE	III	BLACK	–	X	6.00			BIKE LANE
W6-1	1	48x48	16.00	X	YELLOW	III	BLACK	–	X		16.00		DIVIDED HIGHWAY (ROAD) BEGINS (SYMBOL)
W73A<CA>	1	48x48	16.00	X	YELLOW	III	BLACK	–	X		16.00		RIGHT LANE TURNS RIGHT AHEAD
W4-7L	1	48x48	16.00	X	YELLOW	III	BLACK	–	X		16.00		THRU TRAFFIC MERGE LEFT
W6-2	1	48x48	16.00	X	YELLOW	III	BLACK	–	X		16.00		DIVIDED HIGHWAY (ROAD) ENDS (SYMBOL)
							SHEET TOTAL			90.59	113.00	21.00	

NOTES:
CALIFORNIA SIGN CODES ARE DESIGNATED BY <CA>
OTHERWISE FEDERAL SIGH CODES ARE SHOWN.

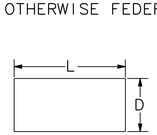

L=LENGTH OF SIGN
D=DEPTH OF SIGN

SIGN QUANTITIES AND DETAILS

SQ-3

STATE OF CALIFORNIA – DEPARTMENT OF TRANSPORTATION
Caltrans

CONSULTANT FUNCTIONAL SUPERVISOR: ROBERT MATTHEW BROGAN
CALCULATED-DESIGNED BY: J. PANGBURN
CHECKED BY: M. BROGAN
REVISED BY
DATE REVISED

PATH: V:\Chico-55-0131-SR32 Widening\CADD\Drawing\ FILE NAME: sr32_SQ1-SQ3 PLOT DATE: Dec 20, 2011-09:21:28am CAD USER: amillar

LAST REVISION 00-00-00 DATE PLOTTED => $DATE TIME PLOTTED => $TIME

Dist	COUNTY	ROUTE	POST MILES TOTAL PROJECT	SHEET No.	TOTAL SHEETS
03	But	32	10.3/11.3	77	144

R.M. Brogan 12-22-11
REGISTERED CIVIL ENGINEER DATE

DECEMBER 22, 2011
PLANS APPROVAL DATE

REGISTERED PROFESSIONAL ENGINEER
ROBERT MATTHEW BROGAN
No. 63854
Exp. 9/30/12
CIVIL
STATE OF CALIFORNIA

THE STATE OF CALIFORNIA OR ITS OFFICERS OR AGENTS SHALL NOT BE RESPONSIBLE FOR THE ACCURACY OR COMPLETENESS OF SCANNED COPIES OF THIS PLAN SHEET.

MARK THOMAS & CO., INC.
7300 FOLSOM BLVD STE 203
SACRAMENTO, CA 95826

CITY OF CHICO
CAPITAL PROJECT SERVICES
411 MAIN STREET
CHICO, CA 95927

NOTES:

1. FOR SOUND WALL PROFILES, SEE SHEETS SW-4 THRU SW-9.
2. THE CONTRACTOR SHALL LAYOUT THE ENTIRE ALIGNMENT OF THE PROPOSED SOUNDWALL IN THE FIELD PRIOR TO CONSTRUCTION. THE PROPOSED LOCATION SHALL BE REVIEWED BY THE ENGINEER, CITY STAFF, AND DESIGNERS IN THE FIELD, TO DETERMINE IF EXISTING TREES CAN BE LEFT IN PLACE. THE CONTRACTOR SHALL COORDINATE WITH THE ENGINEER TO ADJUST THE SOUNDWALL LOCATION AS REQUESTED BY THE CITY.

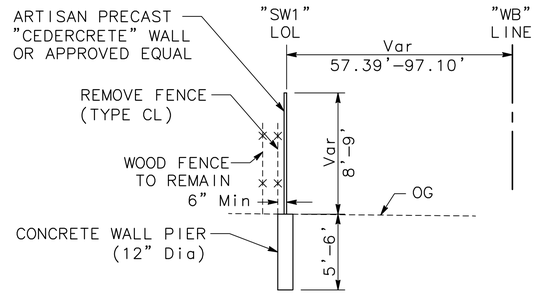

TYPICAL SECTION
"SW1" 10+00.00 TO "SW1" 23+48.79
(LOOKING EAST)
NO SCALE

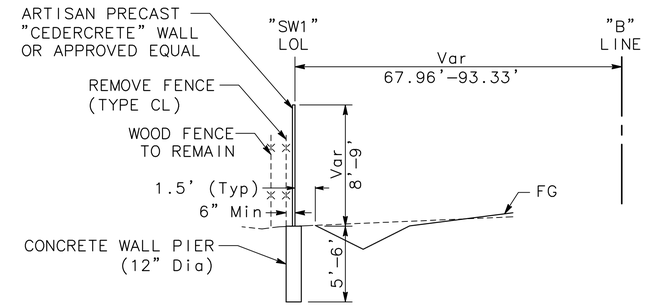

TYPICAL SECTION
"SW1" 23+48.79 TO "SW1" 47+49.33
(LOOKING EAST)
NO SCALE

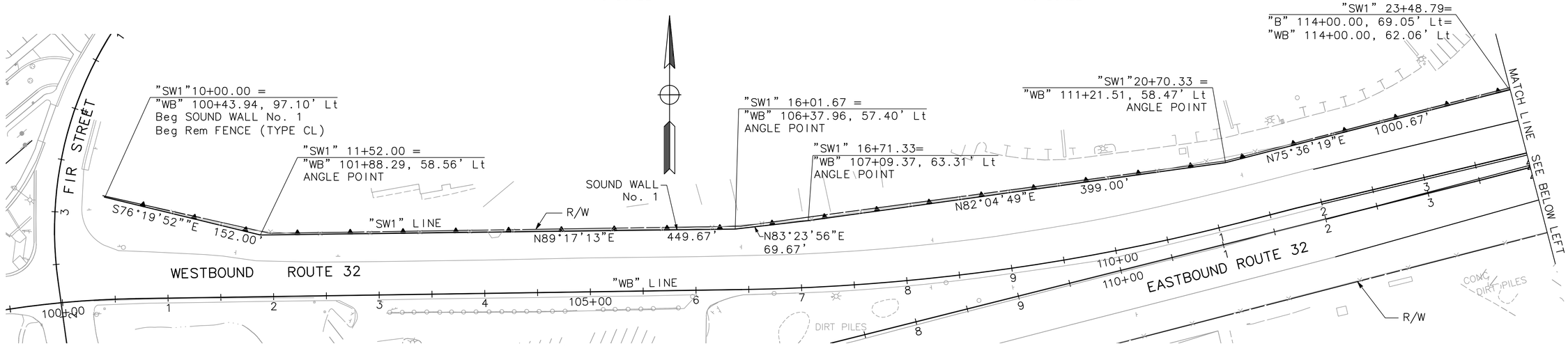

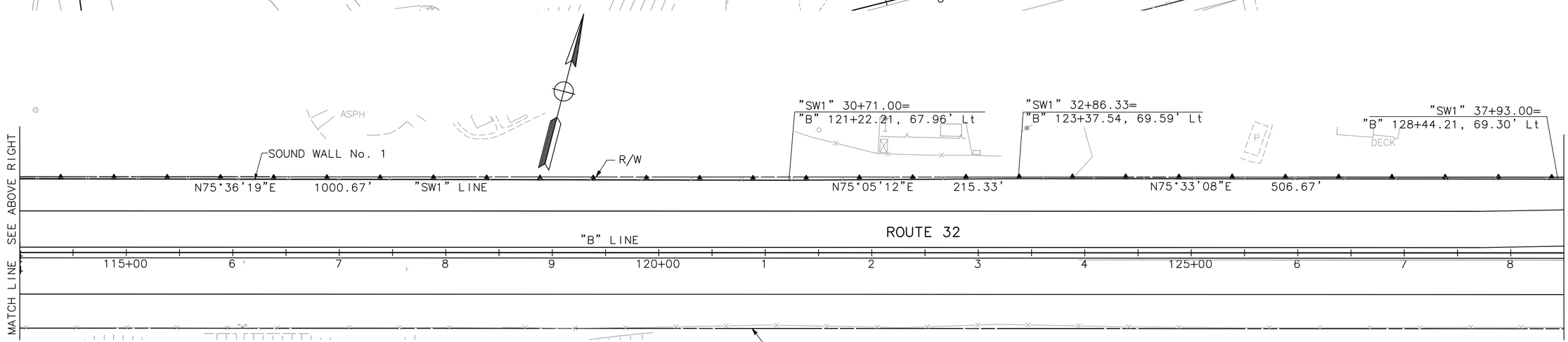

SOUND WALL PLAN

SCALE: 1" = 50'

SW-1

THIS PLAN ACCURATE FOR SOUND WALL WORK ONLY

STATE OF CALIFORNIA - DEPARTMENT OF TRANSPORTATION
Caltrans

CONSULTANT FUNCTIONAL SUPERVISOR: ROBERT MATTHEW BROGAN
CALCULATED-DESIGNED BY: J. PANGBURN
CHECKED BY: M. BROGAN
REVISED BY
DATE REVISED

PATH: V:\Chico-55-0131-SR32 Widening\CADD\Drawing\ FILE NAME: sr32_SW1-SW9 PLOT DATE: Dec 20, 2011-09:22:42am CAD USER: amillar

LAST REVISION 00-00-00 | DATE PLOTTED => $DATE | TIME PLOTTED => $TIME

Dist	COUNTY	ROUTE	POST MILES TOTAL PROJECT	SHEET No.	TOTAL SHEETS
03	But	32	10.3/11.3	78	144

R.M. Brogan 12-22-11
REGISTERED CIVIL ENGINEER DATE

DECEMBER 22, 2011
PLANS APPROVAL DATE

REGISTERED PROFESSIONAL ENGINEER ROBERT MATTHEW BROGAN No. 63854 Exp. 9/30/12 CIVIL STATE OF CALIFORNIA

THE STATE OF CALIFORNIA OR ITS OFFICERS OR AGENTS SHALL NOT BE RESPONSIBLE FOR THE ACCURACY OR COMPLETENESS OF SCANNED COPIES OF THIS PLAN SHEET.

MARK THOMAS & CO., INC.
7300 FOLSOM BLVD STE 203
SACRAMENTO, CA 95826

CITY OF CHICO
CAPITAL PROJECT SERVICES
411 MAIN STREET
CHICO, CA 95927

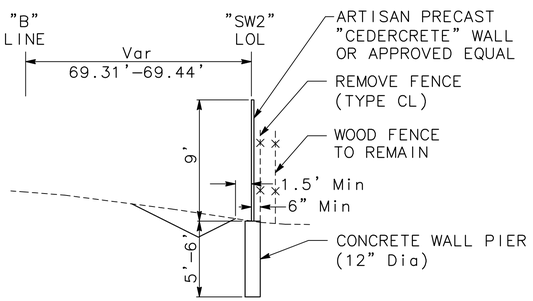

TYPICAL SECTION
"SW2" 10+00.00 TO "SW2" 15+38.33
(LOOKING EAST)
NO SCALE

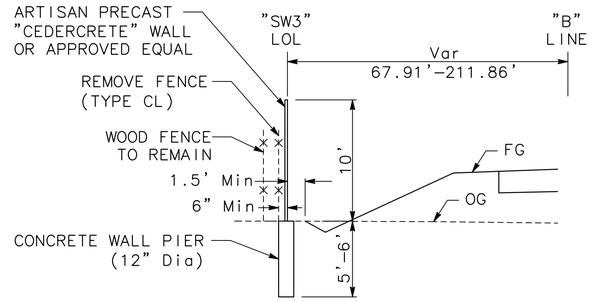

TYPICAL SECTION
"SW3" 10+00.00 TO "SW3" 16+77.67
(LOOKING EAST)
NO SCALE

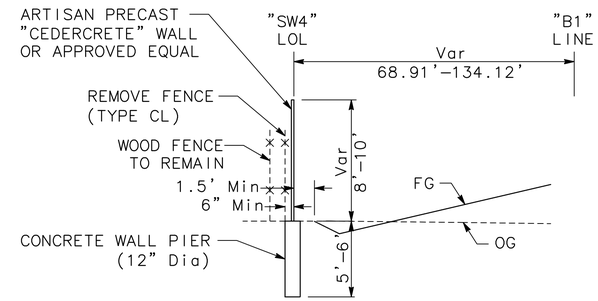

TYPICAL SECTION
"SW4" 10+00.00 TO "SW4" 18+55.00
(LOOKING EAST)
NO SCALE

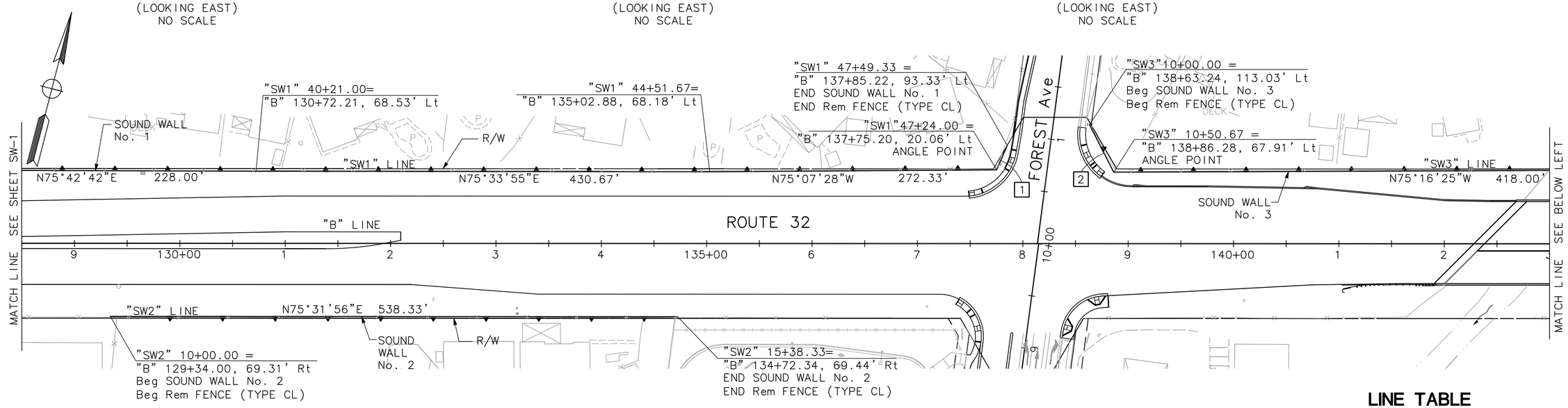

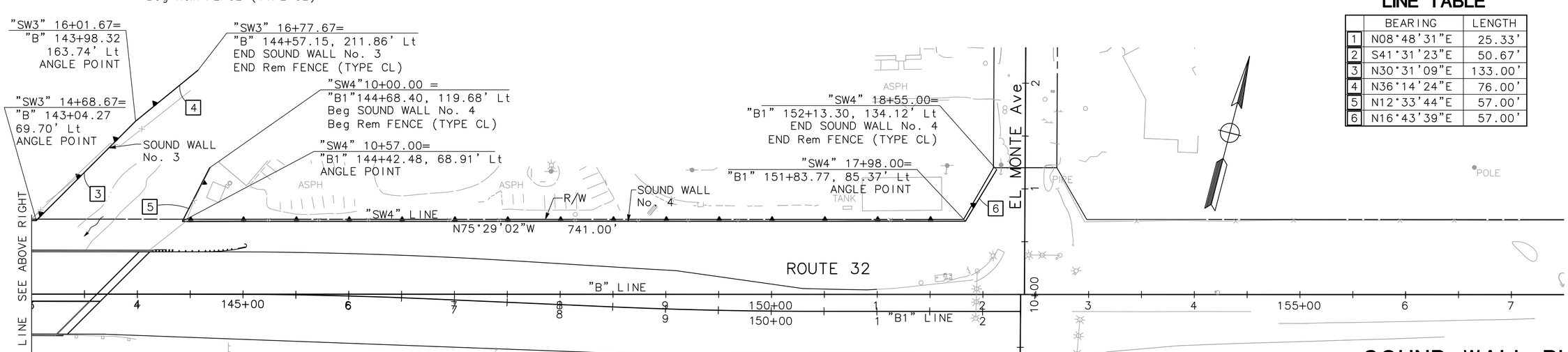

LINE TABLE

	BEARING	LENGTH
1	N08°48'31"E	25.33'
2	S41°31'23"E	50.67'
3	N30°31'09"E	133.00'
4	N36°14'24"E	76.00'
5	N12°33'44"E	57.00'
6	N16°43'39"E	57.00'

SOUND WALL PLAN
SCALE: 1" = 50'

SW-2

THIS PLAN ACCURATE FOR SOUND WALL WORK ONLY

STATE OF CALIFORNIA - DEPARTMENT OF TRANSPORTATION
Caltrans

CONSULTANT FUNCTIONAL SUPERVISOR: ROBERT MATTHEW BROGAN
CALCULATED-DESIGNED BY: J. PANGBURN
CHECKED BY: M. BROGAN
REVISED BY
DATE REVISED

PATH: V:\Chico-55-0131-SR32 Widening\CADD\Drawing\ FILE NAME: sr32_SW1-SW9 PLOT DATE: Dec 20, 2011-10:37:20am CAD USER: amillar

LAST REVISION 00-00-00 | DATE PLOTTED => $DATE | TIME PLOTTED => $TIME

Dist	COUNTY	ROUTE	POST MILES TOTAL PROJECT	SHEET No.	TOTAL SHEETS
03	But	32	10.3/11.3	79	144

R.M. Brogan 12-22-11
REGISTERED CIVIL ENGINEER DATE

DECEMBER 22, 2011
PLANS APPROVAL DATE

REGISTERED PROFESSIONAL ENGINEER ROBERT MATTHEW BROGAN No. 63854 Exp. 9/30/12 CIVIL STATE OF CALIFORNIA

THE STATE OF CALIFORNIA OR ITS OFFICERS OR AGENTS SHALL NOT BE RESPONSIBLE FOR THE ACCURACY OR COMPLETENESS OF SCANNED COPIES OF THIS PLAN SHEET.

MARK THOMAS & CO., INC.
7300 FOLSOM BLVD STE 203
SACRAMENTO, CA 95826

CITY OF CHICO
CAPITAL PROJECT SERVICES
411 MAIN STREET
CHICO, CA 95927

NOTES:

1. FOR SOUND WALL LAYOUT PLAN SEE SHEETS SW-1 AND SW-2.

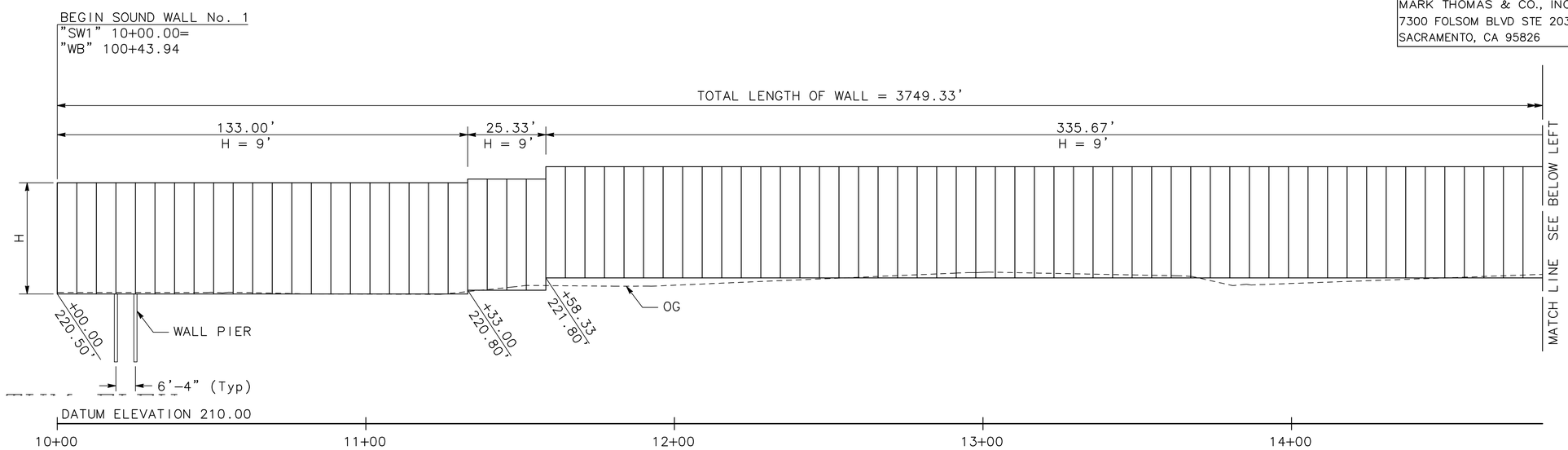

PROFILE
"SW1" 10+00.00 TO "SW1" 47+49.33
SCALE: Horiz 1" = 20'
Vert 1" = 5'

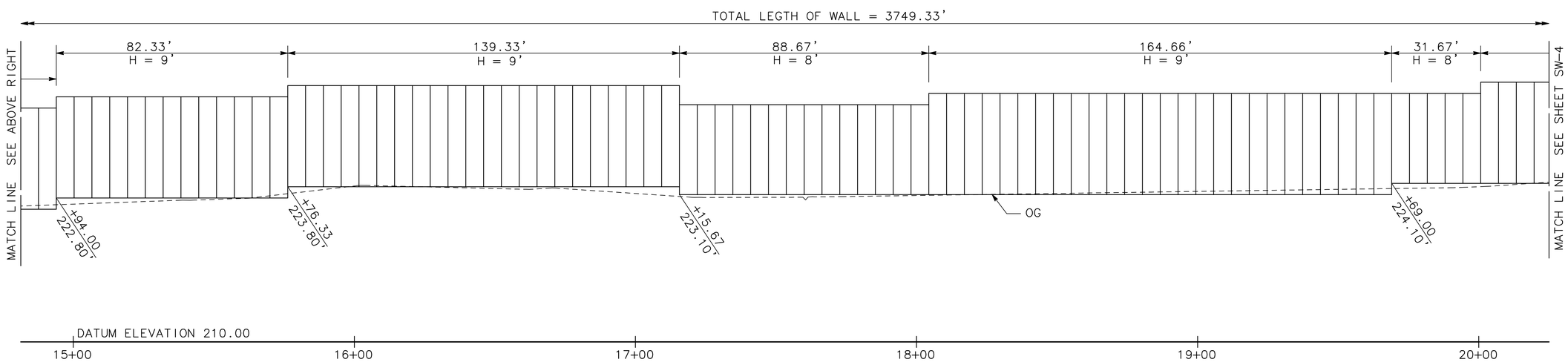

PROFILE
"SW1" 10+00.00 TO "SW1" 47+49.33
SCALE: Horiz 1" = 20'
Vert 1" = 5'

SOUND WALL PLAN
SOUND WALL No. 1
SCALE: AS NOTED

SW-3

STATE OF CALIFORNIA – DEPARTMENT OF TRANSPORTATION
Caltrans
CONSULTANT FUNCTIONAL SUPERVISOR: ROBERT MATTHEW BROGAN
CALCULATED-DESIGNED BY: J. PANGBURN
CHECKED BY: M. BROGAN
REVISED BY
DATE REVISED

LAST REVISION 00-00-00
DATE PLOTTED => $DATE
TIME PLOTTED => $TIME

PATH: V:\Chico-55-0131-SR32 Widening\CADD\Drawing\ FILE NAME: sr32_SW1-SW9 PLOT DATE: Dec 20, 2011-09:23:12am CAD USER: amillar

Dist	COUNTY	ROUTE	POST MILES TOTAL PROJECT	SHEET No.	TOTAL SHEETS
03	But	32	10.3/11.3	80	144

R.M. Brogan 12-22-11
REGISTERED CIVIL ENGINEER DATE

DECEMBER 22, 2011
PLANS APPROVAL DATE

REGISTERED PROFESSIONAL ENGINEER ROBERT MATTHEW BROGAN No. 63854 Exp. 9/30/12 CIVIL STATE OF CALIFORNIA

THE STATE OF CALIFORNIA OR ITS OFFICERS OR AGENTS SHALL NOT BE RESPONSIBLE FOR THE ACCURACY OR COMPLETENESS OF SCANNED COPIES OF THIS PLAN SHEET.

MARK THOMAS & CO., INC.
7300 FOLSOM BLVD STE 203
SACRAMENTO, CA 95826

CITY OF CHICO
CAPITAL PROJECT SERVICES
411 MAIN STREET
CHICO, CA 95927

NOTES:

1. FOR SOUND WALL LAYOUT PLAN SEE SHEETS SW-1 AND SW-2.

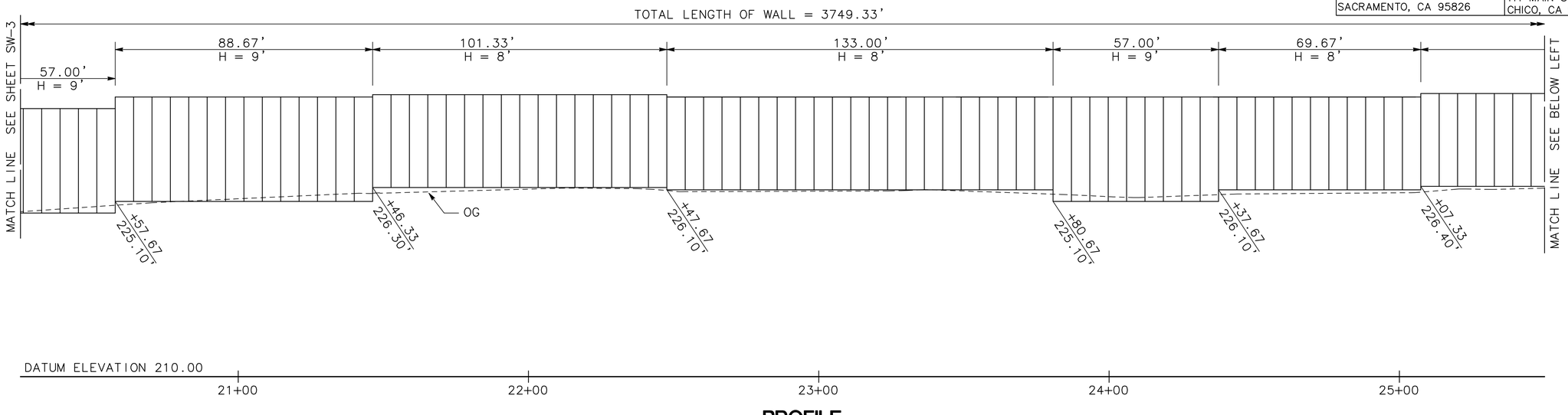

PROFILE
"SW1" 10+00.00 TO "SW1" 47+49.33
SCALE: Horiz 1" = 20'
Vert 1" = 5'

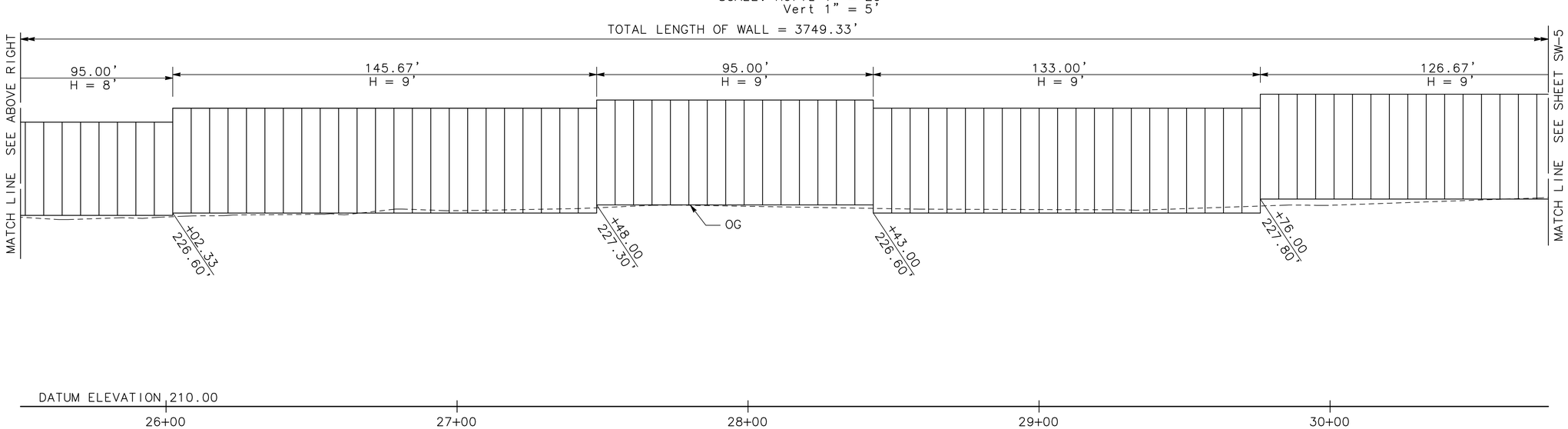

PROFILE
"SW1" 10+00.00 TO "SW1" 47+49.33
SCALE: Horiz 1" = 20'
Vert 1" = 5'

SOUND WALL PLAN
SOUND WALL No. 1
SCALE: AS NOTED

SW-4

STATE OF CALIFORNIA - DEPARTMENT OF TRANSPORTATION
Caltrans
CONSULTANT FUNCTIONAL SUPERVISOR: ROBERT MATTHEW BROGAN
CALCULATED-DESIGNED BY: J. PANGBURN
CHECKED BY: M. BROGAN
REVISED BY
DATE REVISED

LAST REVISION 00-00-00
DATE PLOTTED => $DATE
TIME PLOTTED => $TIME

PATH: V:\Chico-55-0131-SR32 Widening\CADD\Drawing\ FILE NAME: sr32_SW1-Sw9 PLOT DATE: Dec 20, 2011-09:23:31am CAD USER: amillar

BORDER LAST REVISED 7/2/2010
USERNAME => $USER
DGN FILE => $REQUEST
RELATIVE BORDER SCALE IS IN INCHES 0 1 2 3
UNIT 0000
PROJECT NUMBER & PHASE 0300000261

Dist	COUNTY	ROUTE	POST MILES TOTAL PROJECT	SHEET No.	TOTAL SHEETS
03	But	32	10.3/11.3	81	144

R.M. Brogan 12-22-11
REGISTERED CIVIL ENGINEER DATE

DECEMBER 22, 2011
PLANS APPROVAL DATE

REGISTERED PROFESSIONAL ENGINEER ROBERT MATTHEW BROGAN No. 63854 Exp. 9/30/12 CIVIL STATE OF CALIFORNIA

THE STATE OF CALIFORNIA OR ITS OFFICERS OR AGENTS SHALL NOT BE RESPONSIBLE FOR THE ACCURACY OR COMPLETENESS OF SCANNED COPIES OF THIS PLAN SHEET.

MARK THOMAS & CO., INC.
7300 FOLSOM BLVD STE 203
SACRAMENTO, CA 95826

CITY OF CHICO
CAPITAL PROJECT SERVICES
411 MAIN STREET
CHICO, CA 95927

NOTES:

1. FOR SOUND WALL LAYOUT PLAN SEE SHEETS SW-1 AND SW-2.

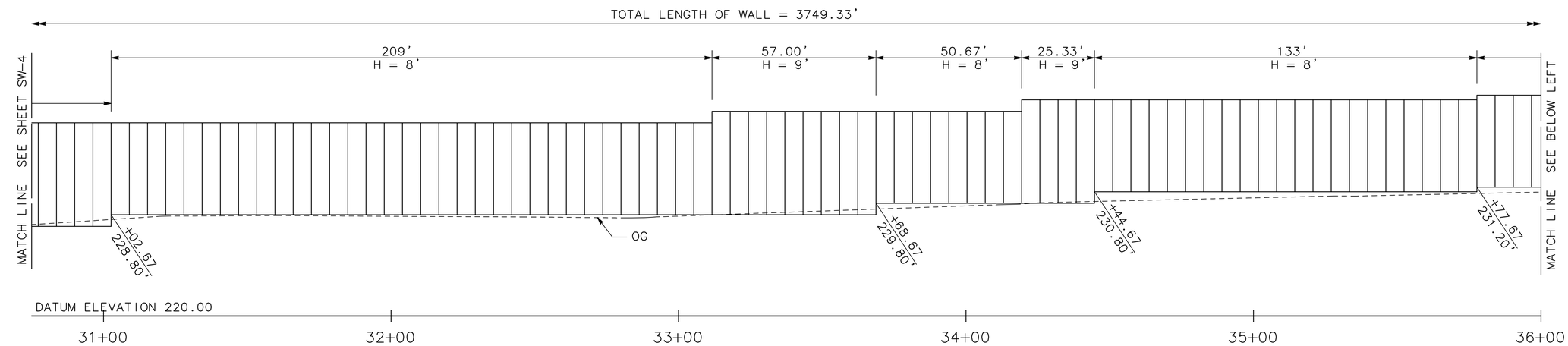

PROFILE
"SW1" 10+00.00 TO "SW1" 47+49.33
SCALE: Horiz 1" = 20'
Vert 1" = 5'

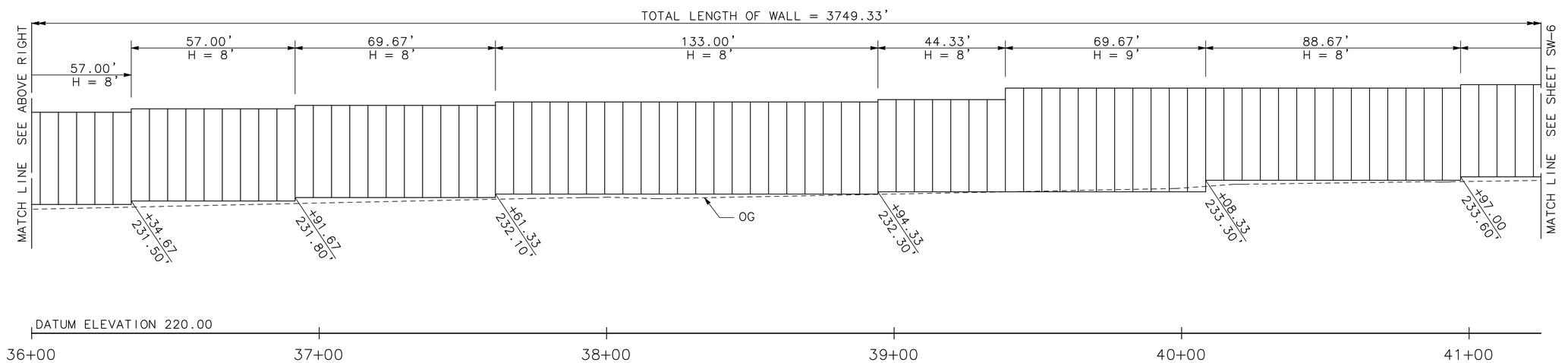

PROFILE
"SW1" 10+00.00 TO "SW1" 47+49.33
SCALE: Horiz 1" = 20'
Vert 1" = 5'

SOUND WALL PLAN
SOUND WALL No. 1
SCALE: AS NOTED

SW-5

REVISED BY	DATE REVISED

CALCULATED-DESIGNED BY: J. PANGBURN
CHECKED BY: M. BROGAN
CONSULTANT FUNCTIONAL SUPERVISOR: ROBERT MATTHEW BROGAN
STATE OF CALIFORNIA - DEPARTMENT OF TRANSPORTATION
Caltrans

PATH: V:\Chico-55-0131-SR32 Widening\CADD\Drawing\ FILE NAME: sr32_SW1-SW9 PLOT DATE: Dec 20, 2011-09:23:48am CAD USER: amillar

LAST REVISION 00-00-00 | DATE PLOTTED => $DATE | TIME PLOTTED => $TIME

BORDER LAST REVISED 7/2/2010 | USERNAME => $USER | DGN FILE => $REQUEST | RELATIVE BORDER SCALE IS IN INCHES 0 1 2 3 | UNIT 0000 | PROJECT NUMBER & PHASE 0300000261

Dist	COUNTY	ROUTE	POST MILES TOTAL PROJECT	SHEET No.	TOTAL SHEETS
03	But	32	10.3/11.3	82	144

R.M. Brogan 12-22-11
REGISTERED CIVIL ENGINEER DATE

DECEMBER 22, 2011
PLANS APPROVAL DATE

REGISTERED PROFESSIONAL ENGINEER ROBERT MATTHEW BROGAN No. 63854 Exp. 9/30/12 CIVIL STATE OF CALIFORNIA

THE STATE OF CALIFORNIA OR ITS OFFICERS OR AGENTS SHALL NOT BE RESPONSIBLE FOR THE ACCURACY OR COMPLETENESS OF SCANNED COPIES OF THIS PLAN SHEET.

MARK THOMAS & CO., INC.
7300 FOLSOM BLVD STE 203
SACRAMENTO, CA 95826

CITY OF CHICO
CAPITAL PROJECT SERVICES
411 MAIN STREET
CHICO, CA 95927

NOTES:

1. FOR SOUND WALL LAYOUT PLAN SEE SHEETS SW-1 AND SW-2.

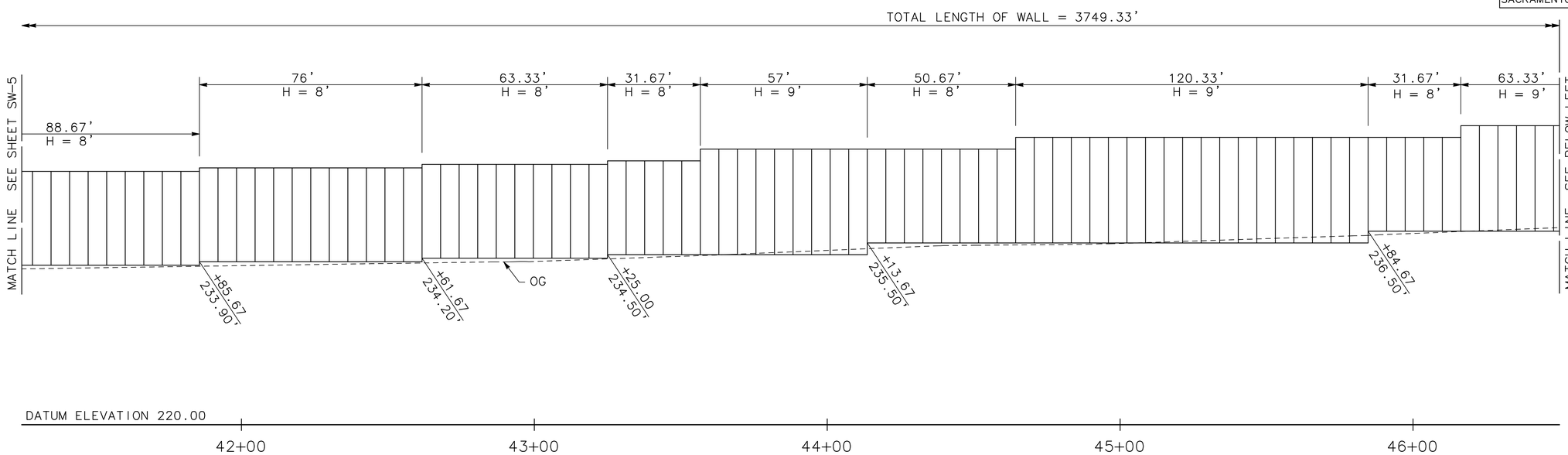

PROFILE
"SW1" 10+00.00 TO "SW1" 47+49.33
SCALE: Horiz 1" = 20'
Vert 1" = 5'

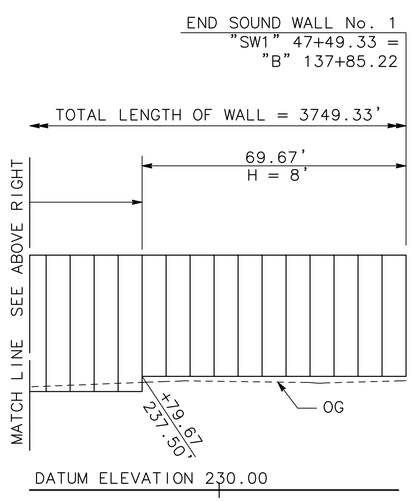

PROFILE
"SW1" 10+00.00 TO "SW1" 47+49.33
SCALE: Horiz 1" = 20'
Vert 1" = 5'

SOUND WALL PLAN
SOUND WALL No. 1
SCALE: AS NOTED

SW-6

STATE OF CALIFORNIA - DEPARTMENT OF TRANSPORTATION
Caltrans
CONSULTANT FUNCTIONAL SUPERVISOR: ROBERT MATTHEW BROGAN
CALCULATED-DESIGNED BY: J. PANGBURN
CHECKED BY: M. BROGAN
REVISED BY
DATE REVISED

PATH: V:\Chico-55-0131-SR32 widening\CADD\Drawing\ FILE NAME: sr32_SW1-SW9 PLOT DATE: Dec 20, 2011-09:24:10am CAD USER: amillar

LAST REVISION 00-00-00 DATE PLOTTED => $DATE TIME PLOTTED => $TIME

BORDER LAST REVISED 7/2/2010 | USERNAME => $USER DGN FILE => $REQUEST | RELATIVE BORDER SCALE IS IN INCHES 0 1 2 3 | UNIT 0000 | PROJECT NUMBER & PHASE 0300000261

Dist	COUNTY	ROUTE	POST MILES TOTAL PROJECT	SHEET No.	TOTAL SHEETS
03	But	32	10.3/11.3	83	144

R.M. Brogan 12-22-11
REGISTERED CIVIL ENGINEER DATE

DECEMBER 22, 2011
PLANS APPROVAL DATE

REGISTERED PROFESSIONAL ENGINEER
ROBERT MATTHEW BROGAN
No. 63854
Exp. 9/30/12
CIVIL
STATE OF CALIFORNIA

THE STATE OF CALIFORNIA OR ITS OFFICERS OR AGENTS SHALL NOT BE RESPONSIBLE FOR THE ACCURACY OR COMPLETENESS OF SCANNED COPIES OF THIS PLAN SHEET.

MARK THOMAS & CO., INC.
7300 FOLSOM BLVD STE 203
SACRAMENTO, CA 95826

CITY OF CHICO
CAPITAL PROJECT SERVICES
411 MAIN STREET
CHICO, CA 95927

NOTES:

1. FOR SOUND WALL LAYOUT PLAN SEE SHEETS SW-1 AND SW-2.

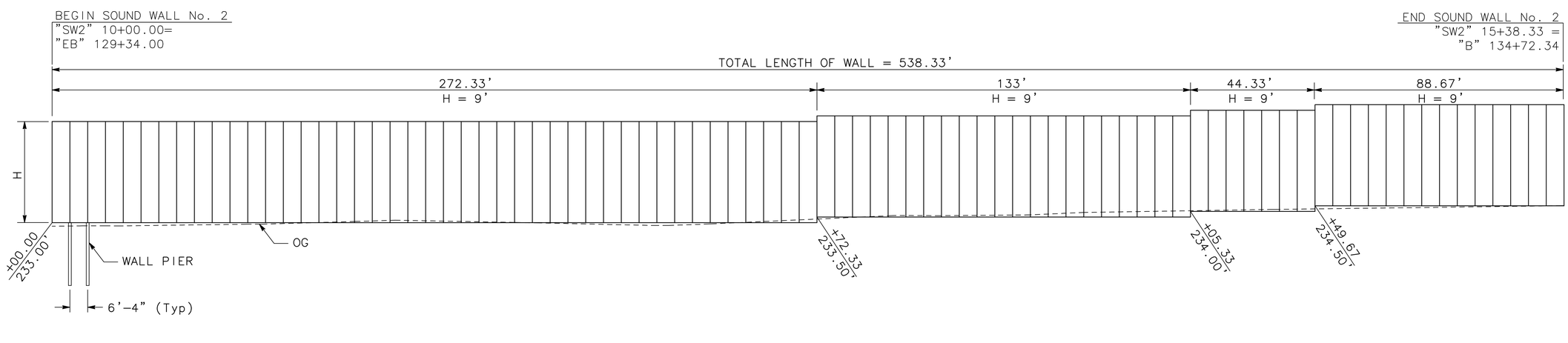

PROFILE

"SW2" 10+00.00 TO "SW2" 15+38.33
SCALE: Horiz 1" = 20'
Vert 1" = 5'

SOUND WALL PLAN

SOUND WALL No. 2

SCALE: AS NOTED

SW-7

REVISED BY	DATE REVISED

CALCULATED-DESIGNED BY: J. PANGBURN
CHECKED BY: M. BROGAN
CONSULTANT FUNCTIONAL SUPERVISOR: ROBERT MATTHEW BROGAN

STATE OF CALIFORNIA - DEPARTMENT OF TRANSPORTATION
Caltrans

LAST REVISION 00-00-00 | DATE PLOTTED => $DATE | TIME PLOTTED => $TIME

PATH: V:\Chico-55-0131-SR32 Widening\CADD\Drawing\ FILE NAME: sr32_SW1-SW9 PLOT DATE: Dec 20, 2011-09:24:27am CAD USER: amillar

BORDER LAST REVISED 7/2/2010 | USERNAME => $USER | DGN FILE => $REQUEST | RELATIVE BORDER SCALE IS IN INCHES 0 1 2 3 | UNIT 0000 | PROJECT NUMBER & PHASE 0300000261

Dist	COUNTY	ROUTE	POST MILES TOTAL PROJECT	SHEET No.	TOTAL SHEETS
03	But	32	10.3/11.3	84	144

R.M. Brogan 12-22-11
REGISTERED CIVIL ENGINEER DATE

DECEMBER 22, 2011
PLANS APPROVAL DATE

REGISTERED PROFESSIONAL ENGINEER ROBERT MATTHEW BROGAN No. 63854 Exp. 9/30/12 CIVIL STATE OF CALIFORNIA

THE STATE OF CALIFORNIA OR ITS OFFICERS OR AGENTS SHALL NOT BE RESPONSIBLE FOR THE ACCURACY OR COMPLETENESS OF SCANNED COPIES OF THIS PLAN SHEET.

MARK THOMAS & CO., INC.
7300 FOLSOM BLVD STE 203
SACRAMENTO, CA 95826

CITY OF CHICO
CAPITAL PROJECT SERVICES
411 MAIN STREET
CHICO, CA 95927

NOTES:

1. FOR SOUND WALL LAYOUT PLAN SEE SHEETS SW-1 AND SW-2.

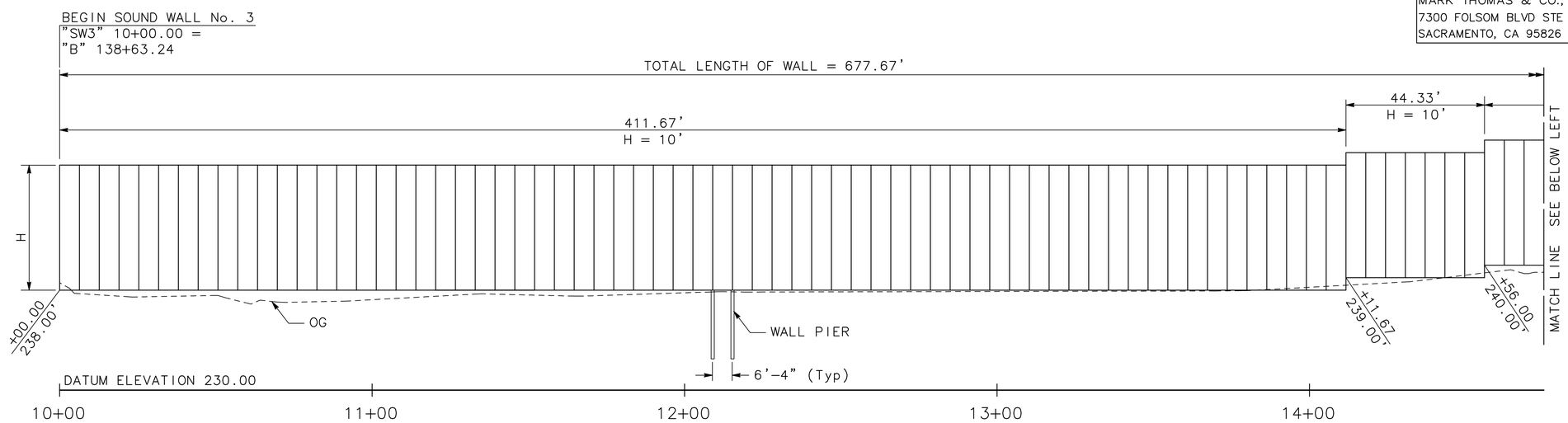

PROFILE
"SW3" 10+00.00 TO "SW3" 16+77.67
SCALE: Horiz 1" = 20'
Vert 1" = 5'

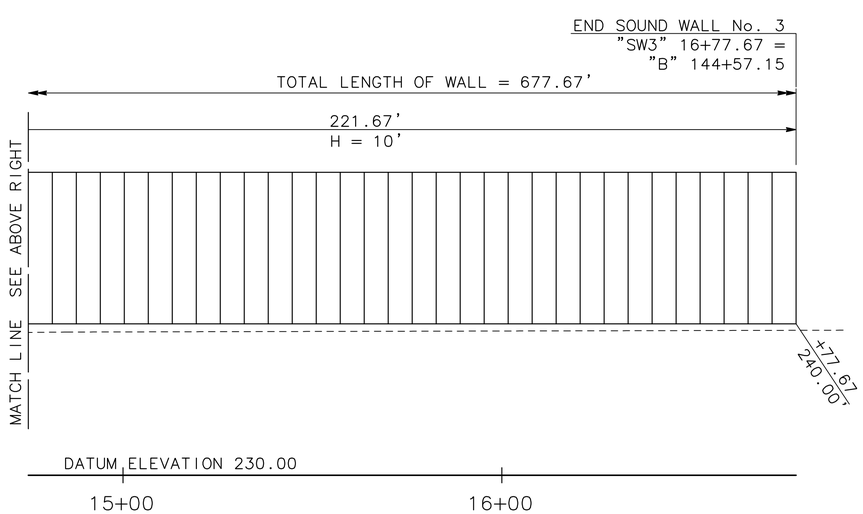

PROFILE
"SW3" 10+00.00 TO "SW3" 16+77.67
SCALE: Horiz 1" = 20'
Vert 1" = 5'

SOUND WALL PLAN
SOUND WALL No. 3
SCALE: AS NOTED

SW-8

REVISED BY	DATE REVISED

CALCULATED-DESIGNED BY: J. PANGBURN
CHECKED BY: M. BROGAN
CONSULTANT FUNCTIONAL SUPERVISOR: ROBERT MATTHEW BROGAN

STATE OF CALIFORNIA - DEPARTMENT OF TRANSPORTATION
Caltrans

PATH: V:\Chico-55-0131-SR32 Widening\CADD\Drawing\ FILE NAME: sr32_SW1-SW9 PLOT DATE: Dec 20, 2011-09:24:46am CAD USER: amillar

LAST REVISION 00-00-00 | DATE PLOTTED => $DATE | TIME PLOTTED => $TIME

BORDER LAST REVISED 7/2/2010 | USERNAME => $USER | DGN FILE => $REQUEST | RELATIVE BORDER SCALE IS IN INCHES 0 1 2 3 | UNIT 0000 | PROJECT NUMBER & PHASE 0300000261

Dist	COUNTY	ROUTE	POST MILES TOTAL PROJECT	SHEET No.	TOTAL SHEETS
03	But	32	10.3/11.3	85	144

R.M. Brogan 12-22-11
REGISTERED CIVIL ENGINEER DATE

DECEMBER 22, 2011
PLANS APPROVAL DATE

REGISTERED PROFESSIONAL ENGINEER ROBERT MATTHEW BROGAN No. 63854 Exp. 9/30/12 CIVIL STATE OF CALIFORNIA

THE STATE OF CALIFORNIA OR ITS OFFICERS OR AGENTS SHALL NOT BE RESPONSIBLE FOR THE ACCURACY OR COMPLETENESS OF SCANNED COPIES OF THIS PLAN SHEET.

MARK THOMAS & CO., INC.
7300 FOLSOM BLVD STE 203
SACRAMENTO, CA 95826

CITY OF CHICO
CAPITAL PROJECT SERVICES
411 MAIN STREET
CHICO, CA 95927

NOTES:

1. FOR SOUND WALL LAYOUT PLAN SEE SHEETS SW-1 AND SW-2.

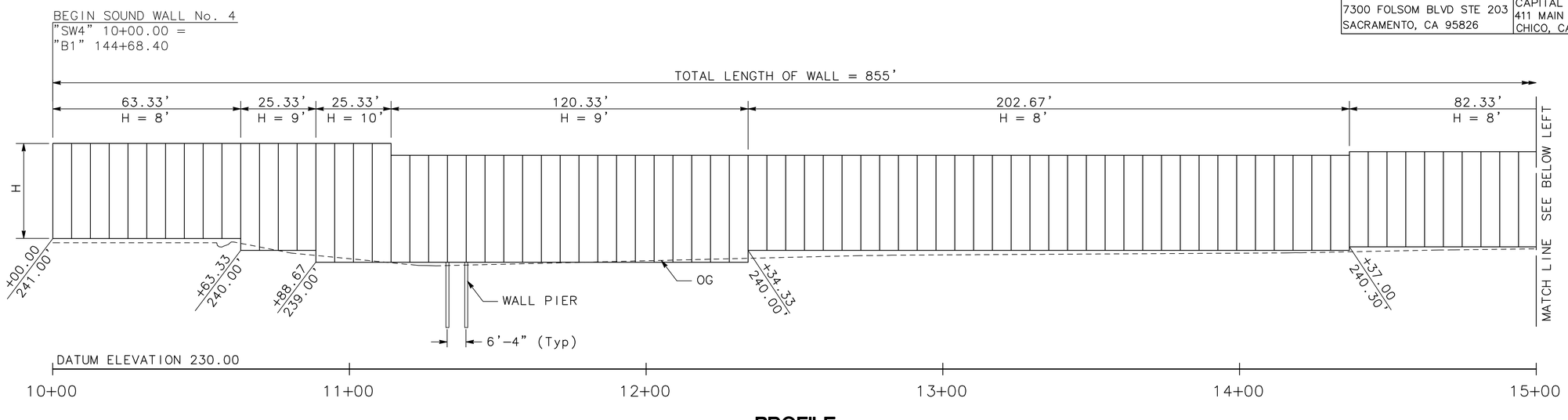

PROFILE

"SW4" 10+00.00 TO "SW4" 18+55.00
SCALE: Horiz 1" = 20'
Vert 1" = 5'

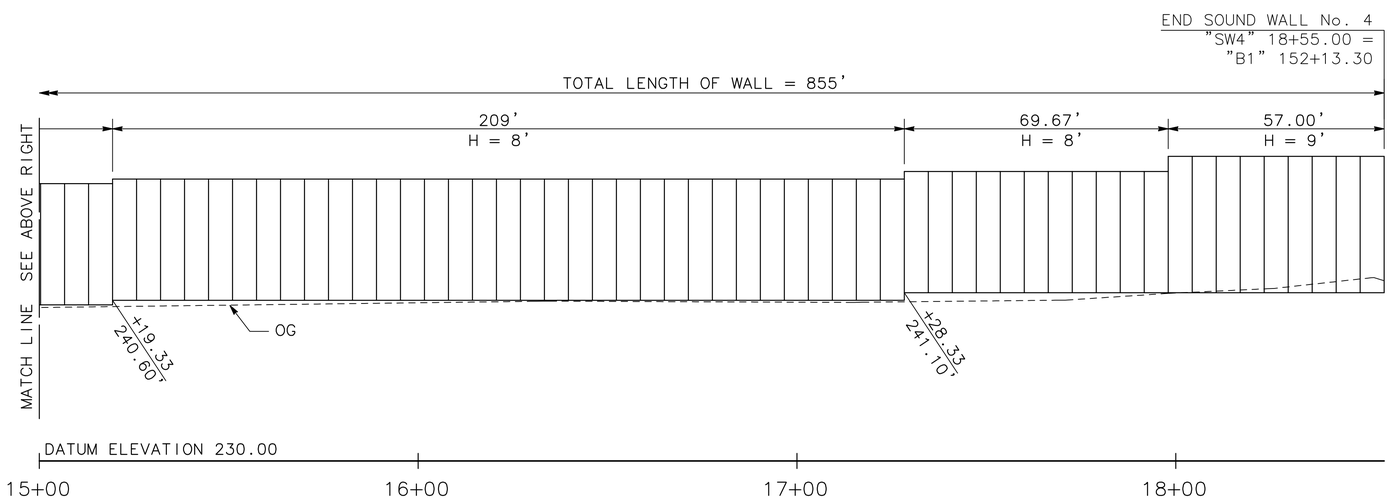

PROFILE

"SW4" 10+00.00 TO "SW4" 18+55.00
SCALE: Horiz 1" = 20'
Vert 1" = 5'

SOUND WALL PLAN

SOUND WALL No. 4

SCALE: AS NOTED

SW-9

REVISED BY	DATE REVISED

CALCULATED-DESIGNED BY: J. PANGBURN
CHECKED BY: M. BROGAN
CONSULTANT FUNCTIONAL SUPERVISOR: ROBERT MATTHEW BROGAN

STATE OF CALIFORNIA - DEPARTMENT OF TRANSPORTATION
Caltrans

PATH: V:\Chico-55-0131-SR32 Widening\CADD\Drawing\ FILE NAME: sr32_SW1-SW9 PLOT DATE: Dec 20, 2011-09:25:02am CAD USER: amillar

LAST REVISION 00-00-00 | DATE PLOTTED => $DATE | TIME PLOTTED => $TIME

BORDER LAST REVISED 7/2/2010 | USERNAME => $USER | DGN FILE => $REQUEST | RELATIVE BORDER SCALE IS IN INCHES 0 1 2 3 | UNIT 0000 | PROJECT NUMBER & PHASE 0300000261

Dist	COUNTY	ROUTE	POST MILES TOTAL PROJECT	SHEET No.	TOTAL SHEETS
03	But	32	10.3/11.3	86	144

R. M. Brogan 12-22-11
REGISTERED CIVIL ENGINEER DATE

DECEMBER 22, 2011
PLANS APPROVAL DATE

REGISTERED PROFESSIONAL ENGINEER ROBERT MATTHEW BROGAN No. 63854 Exp. 9/30/12 CIVIL STATE OF CALIFORNIA

THE STATE OF CALIFORNIA OR ITS OFFICERS OR AGENTS SHALL NOT BE RESPONSIBLE FOR THE ACCURACY OR COMPLETENESS OF SCANNED COPIES OF THIS PLAN SHEET.

MARK THOMAS & CO., INC.
7300 FOLSOM BLVD STE 203
SACRAMENTO, CA 95826

CITY OF CHICO
CAPITAL PROJECT SERVICES
411 MAIN STREET
CHICO, CA 95927

ROADWAY QUANTITIES

STATION LIMITS	HMA-A	CLASS 2 AB	HMA-O	COLD FOAM IN-PLACE RECYCLING
	TON	CY	TON	SY
"EB" 112+00 TO "B" 141+00	4237	5890	1580	601
"WB" 112+00 TO "B" 117+53			84	
"B" 138+44 TO "B" 142+68	1060	1473	193	10258
"B" 143+33 TO "B" 150+99	1472	2047	268	
"B1" 145+50 TO "B" 152+00			229	3271
"F1" 8+54 TO "F1" 9+44	50	69		
"F1" 9+14 TO "F1" 9+66	17	24	20	
"F2" 10+49 TO "F2" 12+86	41	56	75	
VARIABLE DEPTH OVERLAY	4604			
MINOR CONCRETE (MISC CONST)		59		
HMA OD	1			
HMA DIKE	19			
TOTAL	11501	9618	2449	14130

PLACE HOT MIX ASPHALT DIKE

LOCATION	PLACE HOT MIX ASPHALT DIKE (TYPE C)	PLACE HOT MIX ASPHALT DIKE (TYPE E)	PLACE HOT MIX ASPHALT DIKE (TYPE F)
	LF	LF	LF
"B" 138+74 TO 142+68		398	
"B" 141+03 TO 141+42	39		
"B" 141+42 TO 141+92			50
TOTAL	39	398	50

LEGEND

[N] – NOT A SEPARATE PAY ITEM FOR INFORMATION ONLY
SBTG STEEL BACKED TIMBER GUARDRAILING
HMA-O HOT MIX ASPHALT (OPEN GRADED FRICTION COURSE)
HMA-A HOT MIX ASPHALT (TYPE A)

PLACE HOT MIX ASPHALT (MISCELLANEOUS AREA)

LOCATION	OVERSIDE DRAIN
	SY
(FROM DRAINAGE QUANTITIES)	5
TOTAL	5

IMPORTED MATERIAL (SHOULDER BACKING)

LOCATION / DESCRIPTION	TON
"EB" LINE 112+00 TO 137+40	98
"B" LINE 138+80 TO 141+00	8
"B1" LINE 149+69 TO 151+93	9
"B1" LINE 150+99 TO 151+90	3
TOTAL	118

EROSION CONTROL QUANTITIES

LOCATION	COMPOST (INCORPORATE)	EROSION CONTROL (HYDROSEED)
	SY	SF
"WB" 100+43 TO "B" 137+80	2833	44,425
"WB" 106+85 TO "B" 114+00		13,100
"EB" 112+00 TO "B" 137+50		28,105
"B" 129+29 TO "B" 134+70		3,907
"B" 134+70 TO "B" 137+51		5,419
"B" 138+92 TO "B" 143+04		3,991
"B" 138+80 TO "B" 142+02		8,205
"B1" 143+99 TO "B1" 151+54		20,824
"B" 142+87 TO "B1" 151+54		15,849
DEAD HORSE SLOUGH – RSP WEST		1,809
DEAD HORSE SLOUGH – RSP EAST		1,501
TOTAL	2833	147,135

EARTHWORK QUANTITIES

LOCATION / DESCRIPTION	ROADWAY EXCAVATION	EMBANKMENT [N]	DITCH EXCAVATION	IMPORTED BORROW
	CY	CY	CY	CY
"B" LINE	2714	5467	850	–
"B1" LINE	1139	2589	69	–
"F1" LINE	54	1	–	–
"F2" LINE	94	12	–	–
"WB" LINE	149	23	72	–
"EB" LINE	82	17	3	–
TOPSOIL EXCAVATION	559	–	–	–
TOTAL	4790	8109	994	8109

SUMMARY OF QUANTITIES
Q-1

STATE OF CALIFORNIA – DEPARTMENT OF TRANSPORTATION
Caltrans
CONSULTANT FUNCTIONAL SUPERVISOR: ROBERT MATTHEW BROGAN
CALCULATED-DESIGNED BY: J. PANGBURN
CHECKED BY: M. BROGAN
REVISED BY
DATE REVISED

PATH: V:\Chico-55-0131-SR32 Widening\CADD\Drawing\ FILE NAME: sr32_Q1-Q3 PLOT DATE: Dec 20, 2011-09:25:41am CAD USER: amillar

LAST REVISION 00-00-00 DATE PLOTTED => $DATE TIME PLOTTED => $TIME

Dist	COUNTY	ROUTE	POST MILES TOTAL PROJECT	SHEET No.	TOTAL SHEETS
03	But	32	10.3/11.3	87	144

R. M. Brogan 12-22-11
REGISTERED CIVIL ENGINEER DATE

DECEMBER 22, 2011
PLANS APPROVAL DATE

REGISTERED PROFESSIONAL ENGINEER ROBERT MATTHEW BROGAN No. 63854 Exp. 9/30/12 CIVIL STATE OF CALIFORNIA

THE STATE OF CALIFORNIA OR ITS OFFICERS OR AGENTS SHALL NOT BE RESPONSIBLE FOR THE ACCURACY OR COMPLETENESS OF SCANNED COPIES OF THIS PLAN SHEET.

MARK THOMAS & CO., INC.
7300 FOLSOM BLVD STE 203
SACRAMENTO, CA 95826

CITY OF CHICO
CAPITAL PROJECT SERVICES
411 MAIN STREET
CHICO, CA 95927

METAL BEAM GUARD RAILING (WOOD POST)

STATION LIMITS	LOCATION	MBGR	DOUBLE MBGR	TERMINAL SYSTEM (TYPE CAT)	TERMINAL SYSTEM (TYPE CAT) BACKUP	ALTERNATIVE FLARED TERMINAL SYSTEM	TRANSITION RAILING (TYPE WB)
		LF	LF	EA	EA	EA	EA
"EB" 112+00 TO "EB" 112+80	Rt		50	1	1		
"WB" 112+30 TO "WB" 112+80	Lt		50				
"B" 130+78 TO "B" 131+28	Lt		50				
"B" 130+78 TO "B" 131+50	Rt		50	1	1		
"B" 141+42 TO "B" 141+92	Lt	25				1	1
"B" 141+39 TO "B" 144+80	Rt	25				1	1
TOTAL		50	200	2	2	2	2

STEEL-BACKED TIMBER GUARD RAILING

STATION LIMITS	LOCATION	SBTG	SBTG (DOUBLE SIDED)
		LF	LF
"EB" 112+80 TO "EB" 113+00	Rt		20
"WB" 112+80 TO "WB" 113+00	Lt		20
"EB" 113+00 TO "B" 130+58	Rt	1759	
"WB" 113+00 TO "B" 130+58	Lt	1758	
"B" 130+58 TO "B" 130+78	Lt		20
"B" 130+58 TO "B" 130+78	Rt		20
TOTAL		3517	80

OBLITERATE SURFACING

STATION LIMITS	AREA
	SY
"WB" 112+00 TO "B" 115+25.87	84
"EB" 112+00 TO "B" 124+00	504
"B" 128+72 TO "B" 137+49	664
"B" 138+80 TO "B" 141+00	102
TOTAL	1354

REMOVE ROADWAY QUANTITIES

STATION LIMITS	METAL BEAM GUARD RAILING	CONCRETE (CURB & GUTTER)	CONCRETE (SW)	FENCE
	LF	LF	CY	LF
"B" 115+20 TO "B" 116+25 (Rt)		93		
"B" 141+09 TO "B" 141+98 (Rt)	90			
"B" 141+54 TO "B" 142+32 (Rt)	77			
"B" 143+23 TO "B" 143+99 (Rt)	76			
"B" 143+52 TO "B" 144+32 (Rt)	81			
"WB" 100+90 TO "B" 137+84 (Lt)				3704
"B" 129+34 TO "B" 134+72 (Rt)				538
"B" 138+65 TO "B" 143+77 (Lt)				569
"B" 144+45 TO "B" 151+56 (Lt)				711
"F1" 8+54 TO "F1" 9+30 (Lt)		55	4.5	
"F1" 9+14 TO "F1" 9+54 (Rt)		54	4.5	
TOTAL	324	202	9	5522

COLD PLANE AC PAVEMENT

STATION LIMITS	0.15' MAX
	SY
"F1" 9+15 TO "F1" 9+51	276.79
"F2" 11+14 TO "F2" 12+43	142.39
"F2" 12+43 TO "F2" 12+93	227.64
"EB" 110+25 TO "EB" 113+00	1050.89
"WB" 112+00 TO "WB" 113+00	342.48
"B1" 151+00 TO "B1" 152+00	753.74
TOTAL	2794

SUMMARY OF QUANTITIES
Q-2

STATE OF CALIFORNIA - DEPARTMENT OF TRANSPORTATION
Caltrans

CONSULTANT FUNCTIONAL SUPERVISOR: ROBERT MATTHEW BROGAN
CALCULATED-DESIGNED BY: J. PANGBURN
CHECKED BY: M. BROGAN
REVISED BY
DATE REVISED

PATH: V:\Chico-55-0131-SR32 Widening\CADD\Drawing\ FILE NAME: sr32_Q1-Q3 PLOT DATE: Dec 20, 2011-09:25:56am CAD USER: amillar

LAST REVISION 00-00-00 DATE PLOTTED => $DATE TIME PLOTTED => $TIME

BORDER LAST REVISED 7/2/2010 | USERNAME => $USER DGN FILE => $REQUEST | RELATIVE BORDER SCALE IS IN INCHES 0 1 2 3 | UNIT 0000 | PROJECT NUMBER & PHASE 0300000261

Dist	COUNTY	ROUTE	POST MILES TOTAL PROJECT	SHEET No.	TOTAL SHEETS
03	But	32	10.3/11.3	88	144

R.M. Brogan 12-22-11
REGISTERED CIVIL ENGINEER DATE

DECEMBER 22, 2011
PLANS APPROVAL DATE

REGISTERED PROFESSIONAL ENGINEER ROBERT MATTHEW BROGAN No. 63854 Exp. 9/30/12 CIVIL STATE OF CALIFORNIA

THE STATE OF CALIFORNIA OR ITS OFFICERS OR AGENTS SHALL NOT BE RESPONSIBLE FOR THE ACCURACY OR COMPLETENESS OF SCANNED COPIES OF THIS PLAN SHEET.

MARK THOMAS & CO., INC.
7300 FOLSOM BLVD STE 203
SACRAMENTO, CA 95826

CITY OF CHICO
CAPITAL PROJECT SERVICES
411 MAIN STREET
CHICO, CA 95927

MINOR CONCRETE

STATION LIMITS	CURB & GUTTER	CURB		TEXTURED PAVING	AB CL2 (N)	SIDEWALK	CURB RAMP	VEGETATION CONTROL
	A2-6	MEDIAN	RETAINING					
	CY	CY	CY	CY	CY	CY	CY	CY
"B" 141+05.35 TO "B" 141+91.21								0.69
"B" 144+12.12 TO "B" 144+99.62								0.69
"B" 141+05.35 TO "B" 141+30.35								2.73
"B" 144+12.12 TO "B" 144+37.12								2.73
"B" 129+27.00 TO "B" 131+67.00								2.08
"B" 129+69.00 TO "B" 131+67.00								1.72
"EB" 111+92.00 TO "EB" 113+53.00								1.40
"EB" 113+53.00 TO "B" 129+27.00								36.42
"WB" 111+92.00 TO "WB" 113+62.00								1.48
"WB" 111+92.00 TO "B" 129+69.00								37.20
"F1" 8+09.00 TO "F1" 9+12.46				1.0	1.0			
"F1" 8+72.21 TO "F1" 8+90.33					3.2	2.3		
"F1" 8+90.33 TO "F1" 9+37.66					4.9	0.5	3.0	
"F1" 9+14.30 TO "F1" 9+59.66					12.0	5.9	2.6	
"F1" 8+08.00 TO "F1" 9+13.00		2.2						
"F1" 8+54.01 TO "F1" 9+39.48	5.8				2.4			
"F1" 9+14.30 TO "F1" 9+61.67	4.1				1.7			
"F2" 10+41.31 TO "F2" 10+66.34					3.9	1.9	0.9	
"F2" 10+85.87 TO "F2" 12+52.22					16.1	10.1	1.3	
"F2" 10+77.94 TO "F2" 10+83.49					1.5	0.2	0.9	
"F2" 10+98.06 TO "F2" 11+14.88					3.9	1.2	1.6	
"F2" 10+83.00 TO "F2" 12+00.00			7.0		1.7			
"F2" 10+69.47 TO "F2" 11+14.89	3.3				1.4			
"F2" 10+34.58 TO "F2" 12+52.22	14.1				5.7			
TOTAL	27.3	2.2	7.0	1.0	59.4	22.1	10.3	87.14

IRRIGATION CROSSOVERS

LOCATION	6" CONDUIT	3" CONDUIT	2" CONDUIT
	LF	LF	LF
"WB" 100+44 TO "B" 137+84 (Lt)	102		102
"B" 129+34 TO "B" 134+72 (Rt)	89	89	89
TOTAL	191	89	191

PRECAST CONCRETE SOUNDWALL

STATION LIMITS	AREA
	SF
"WB" 100+44 TO "B" 137+84 (Lt)	31971
"B" 129+34 TO "B" 134+72 (Rt)	4845
"B" 138+64 TO "B" 144+58 (Lt)	6777
"B" 144+68 TO "B" 152+10 (Lt)	7094
TOTAL	50687

SUMMARY OF QUANTITIES
Q-3

STATE OF CALIFORNIA - DEPARTMENT OF TRANSPORTATION
Caltrans

CONSULTANT FUNCTIONAL SUPERVISOR: ROBERT MATTHEW BROGAN
CALCULATED-DESIGNED BY: J. PANGBURN
CHECKED BY: M. BROGAN
REVISED BY
DATE REVISED

PATH: V:\Chico-55-0131-SR32 Widening\CADD\Drawing\ FILE NAME: sr32_Q1-Q3 PLOT DATE: Dec 20, 2011-09:26:14am CAD USER: amillar

LAST REVISION 00-00-00 DATE PLOTTED => $DATE TIME PLOTTED => $TIME

BORDER LAST REVISED 7/2/2010 | USERNAME => $USER DGN FILE => $REQUEST | RELATIVE BORDER SCALE IS IN INCHES 0 1 2 3 | UNIT 0000 | PROJECT NUMBER & PHASE 0300000261

Dist	COUNTY	ROUTE	POST MILES TOTAL PROJECT	SHEET No.	TOTAL SHEETS
03	But	32	10.3/11.3	89	144

Kristin D. Calia 12-22-11
REGISTERED CIVIL ENGINEER DATE

DECEMBER 22, 2011
PLANS APPROVAL DATE

REGISTERED PROFESSIONAL ENGINEER
K. CALIA
No. 62461
Exp. 9/30/13
CIVIL
STATE OF CALIFORNIA

THE STATE OF CALIFORNIA OR ITS OFFICERS OR AGENTS SHALL NOT BE RESPONSIBLE FOR THE ACCURACY OR COMPLETENESS OF SCANNED COPIES OF THIS PLAN SHEET.

FEHR & PEERS
2990 LAVA RIDGE COURT
ROSEVILLE, CA 95661

CITY OF CHICO
CAPITAL PROJECT SERVICES
411 MAIN STREET
CHICO, CA 95927

FOR ACCURATE RIGHT OF WAY AND ACCESS DATA, CONTACT RIGHT OF WAY ENGINEERING AT THE DISTRICT OFFICE.

TRAFFIC SIGNAL GENERAL NOTES:

1. ALL WORK SHALL CONFORM TO THE 2006 EDITION OF THE STATE OF CALIFORNIA DEPARTMENT OF TRANSPORTATION (CALTRANS) STANDARD PLANS AND STANDARD SPECIFICATIONS, CALIFORNIA MUTCD, SIGN SPECIFICATION SHEETS, AND THE SPECIAL PROVISIONS.
2. THE CONTRACTOR IS RESPONSIBLE FOR VERIFICATION OF ALL EXISTING UNDERGROUND UTILITIES, WHETHER OR NOT THEY ARE SHOWN ON THESE PLANS. THE CONTRACTOR SHALL CONTACT USA (800-642-2444) AT LEAST 48 HOURS BEFORE BEGINNING WORK. WHERE MARKINGS ARE NEAR PROPOSED FOUNDATIONS, THE CONTRACTOR SHALL LOCATE UNDERGROUND UTILITIES BY POT HOLING PRIOR TO EXCAVATING.
3. ALL NEW PEDESTRIAN SIGNALS SHALL BE COUNTDOWN TYPE.
4. LOCATIONS AND DEPTHS OF EXISTING CITY OWNED FACILITIES SHOWN ON THESE PLANS ARE APPROXIMATE. THE CONTRACTOR SHALL VERIFY THE EXISTENCE, LOCATION AND DEPTH OF ALL CITY OWNED FACILITIES PRIOR TO CONSTRUCTION. THE CITY OF CHICO IS NOT A MEMBER OF UNDERGROUND SERVICE ALERT (USA). THE CONTRACTOR SHALL CALL THE CITY OF CHICO AT (530) 894-4200 AND REQUEST MARKING OF CITY OWNED FACILITIES AT LEAST 72 HOURS (3 WORKING DAYS) PRIOR TO CONSTRUCTION.
5. LOCATIONS OF UTILITY FACILITIES (NON-CITY) SHOWN ON THESE PLANS ARE APPROXIMATE AND SHALL BE VERIFIED BY THE CONTRACTOR BY CONTACTING THE REGIONAL NOTIFICATION CENTER (USA) AT LEAST 48 HOURS (2 WORKING DAYS) PRIOR TO CONSTRUCTION.
6. ALL EXISTING ROADWAY ILLUMINATION SHALL BE MAINTAINED DURING CONSTRUCTION. TEMPORARY LIGHTING SHALL BE KEPT IN EFFECTIVE OPERATION UNTIL THE PERMANENT LIGHTING IS FULLY FUNCTIONAL. EXISTING LIGHTING USED AS TEMPORARY LIGHTING SHALL BE KEPT IN EFFECTIVE OPERATION AND SHALL NOT BE REMOVED UNTIL THE PERMANENT LIGHTING IS FULLY FUNCTIONAL.

INDEX OF ELECTRICAL PLANS

E-1 - GENERAL NOTES, LEGEND, ABBREVIATIONS, AND INDEX
E-2 - MODIFY SIGNAL AND LIGHTING (LOCATION 1)
E-3 - MODIFY SIGNAL AND LIGHTING (LOCATION 1), EQUIPMENT AND CONDUCTOR SCHEDULES
E-4 - MODIFY SIGNAL AND LIGHTING (LOCATION 1), EQUIPMENT REMOVAL
E-5 - MODIFY SIGNAL AND LIGHTING (LOCATION 2)
E-6 - MODIFY SIGNAL AND LIGHTING (LOCATION 2), EQUIPMENT AND CONDUCTOR SCHEDULES
E-7 AND E-8 - INTERCONNECTION CONDUIT AND CABLE
E-9- ELECTRICAL DETAILS
E-10 THRU E-16 - SIGNAL AND LIGHTING (TEMPORARY)
E-17 - ELECTRICAL DETAILS (TEMPORARY SIGNALS)

ABBREVIATIONS

(SEE ALSO RSP ES-1A, RSP ES-1B, AND RSP ES-1C)

CTID	- CALTRANS IDENTIFICATION
GA	- GREEN ARROW
PG&E	- PACIFIC GAS & ELECTRIC
TC	- TELEPHONE CABLE

LEGEND

D1287-15' - ELECTROLIER NUMBERING SYSTEM
- 15' - LUMINAIRE ARM LENGTH IN FEET
- D1287 - ELECTROLIER NUMBER

GENERAL NOTES, LEGEND, ABBREVIATIONS, AND INDEX

NO SCALE

E-1

THIS PLAN IS ACCURATE FOR ELECTRICAL WORK ONLY

STATE OF CALIFORNIA - DEPARTMENT OF TRANSPORTATION
Caltrans
CONSULTANT FUNCTIONAL SUPERVISOR: KRISTIN CALIA
CALCULATED-DESIGNED BY: JOE ANDERSON
CHECKED BY: KRISTIN CALIA
REVISED BY
DATE REVISED

LAST REVISION 00-00-00
DATE PLOTTED => $DATE
TIME PLOTTED => $TIME

Dist	COUNTY	ROUTE	POST MILES TOTAL PROJECT	SHEET No.	TOTAL SHEETS
03	But	32	10.3/11.3	90	144

Kristin D. Calia 12-22-11
REGISTERED CIVIL ENGINEER DATE

DECEMBER 22, 2011
PLANS APPROVAL DATE

REGISTERED PROFESSIONAL ENGINEER K. CALIA No. 62461 Exp. 9/30/13 CIVIL STATE OF CALIFORNIA

THE STATE OF CALIFORNIA OR ITS OFFICERS OR AGENTS SHALL NOT BE RESPONSIBLE FOR THE ACCURACY OR COMPLETENESS OF SCANNED COPIES OF THIS PLAN SHEET.

FEHR & PEERS
2990 LAVA RIDGE COURT
ROSEVILLE, CA 95661

CITY OF CHICO
CAPITAL PROJECT SERVICES
411 MAIN STREET
CHICO, CA 95927

FOR ACCURATE RIGHT OF WAY AND ACCESS DATA, CONTACT RIGHT OF WAY ENGINEERING AT THE DISTRICT OFFICE.

PROJECT NOTES:

1. INSTALL STATE-FURNISHED MODEL 332 CABINET INCLUDING MODEL 2070 CONTROLLER, 2070 6-A MODEM, EXTENDED BATTERY BACKUP SYSTEM CABINET AND BATTERY BACKUP SYSTEM COMPONENTS AND MAKE FINAL CONNECTIONS. FURNISH AND INSTALL BATTERY BACKUP SYSTEM BATTERIES AND DRAWER SHELF ASSEMBLY.
2. INSTALL 12'X 5'X 3.5" PCC CONTROLLER PAD AND CONTROLLER/BBS FOUNDATION. SEE SHEET E-9 FOR PAD AND FOUNDATION DETAILS.
3. INSTALL LOOP DETECTORS PER LOOP DETECTOR LAYOUT DETAIL ON SHEET E-9.
16. Exist PG&E SECONDARY PULL BOX. PG&E TO MAKE ALL FINAL CONNECTIONS.
18. 2"C, MT.
21. Exist 2"C, 2 dlc. REMOVE 2 dlc. INSTALL 2 DLC.
27. 2"C, 3 DLC.
29. 2"C, 2 DLC, 1 SIC.
30. 2"C, 8 DLC.

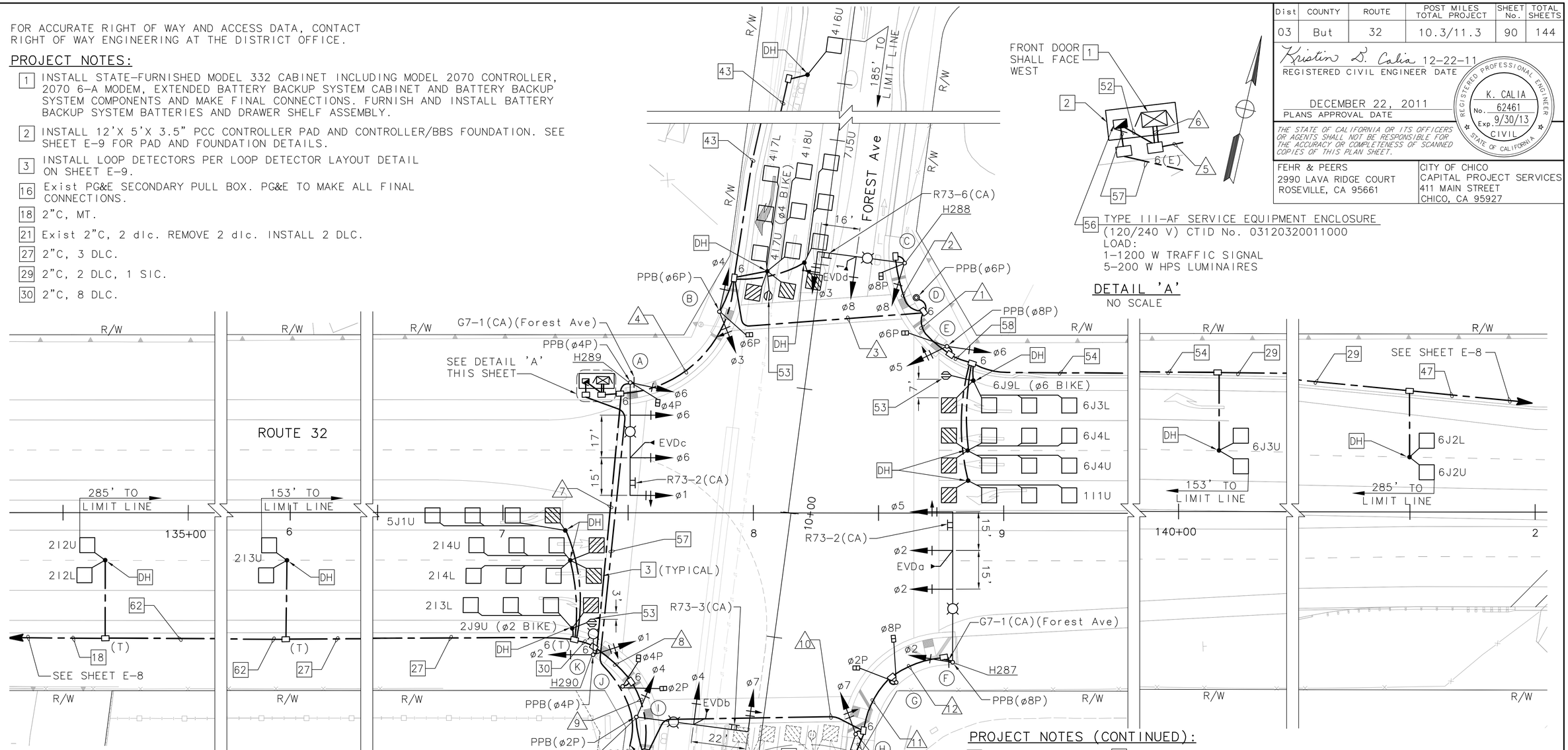

DETAIL 'A'

NO SCALE

56 TYPE III-AF SERVICE EQUIPMENT ENCLOSURE (120/240 V) CTID No. 03120320011000
LOAD:
1-1200 W TRAFFIC SIGNAL
5-200 W HPS LUMINAIRES

Exist PHASE DIAGRAM

EMERGENCY VEHICLE PREEMPTION
EVDa = ø2 + ø5
EVDb = ø4 + ø7
EVDc = ø6 + ø1
EVDd = ø3 + ø8

DESIGN SPEED: FOREST Ave = 35 MPH
ROUTE 32 = 45 MPH

TO Exist CONTROLLER CABINET AT FOREST AVE./HUMBOLDT RD. INTERSECTION

PROJECT NOTES (CONTINUED):

33. Exist 2"C, 1 sic. RC 1 sic. INSTALL 1 SIC FROM THE Exist CITY TRAFFIC SIGNAL CONTROLLER CABINET LOCATED ON THE SOUTHEAST CORNER OF THE FOREST AVE./HUMBOLDT RD. INTERSECTION TO THE NEW ROUTE 32/FOREST AVE. TRAFFIC SIGNAL CONTROLLER CABINET. (APPROX. 850')
43. 2"C, 1 DLC.
47. 2"C, 1 SIC.
48. 2"C, 7 DLC.
52. 2"C, 2#6 (CONTROLLER), 2#8 (LTG).
53. INSTALL MODIFIED TYPE 'D' BICYCLE DETECTOR LOOP PER DETAIL ON SHEET E-9.
54. 2"C, 3 DLC, 1 SIC.
56. FURNISH AND INSTALL TYPE III-AF SERVICE EQUIPMENT ENCLOSURE PER SERVICE WIRING DIAGRAM 'A' ON SHEET E-3.
57. 3"C, 3#2 (SERVICE).
58. 2"C, 8 DLC, 1 SIC.
62. 2"C, 2 DLC.

THIS PLAN IS ACCURATE FOR ELECTRICAL WORK ONLY

MODIFY SIGNAL AND LIGHTING (LOCATION 1)

SCALE: 1"=20'

E-2

STATE OF CALIFORNIA - DEPARTMENT OF TRANSPORTATION
Caltrans
CONSULTANT FUNCTIONAL SUPERVISOR: KRISTIN CALIA
CALCULATED-DESIGNED BY: JOE ANDERSON
CHECKED BY: KRISTIN CALIA
REVISED BY / DATE REVISED

LAST REVISION 00-00-00
DATE PLOTTED => $DATE
TIME PLOTTED => $TIME

FOR ACCURATE RIGHT OF WAY AND ACCESS DATA, CONTACT
RIGHT OF WAY ENGINEERING AT THE DISTRICT OFFICE.

Dist	COUNTY	ROUTE	POST MILES TOTAL PROJECT	SHEET No.	TOTAL SHEETS
03	But	32	10.3/11.3	91	144

Kristin D. Calia 12-22-11
REGISTERED CIVIL ENGINEER DATE

DECEMBER 22, 2011
PLANS APPROVAL DATE

REGISTERED PROFESSIONAL ENGINEER K. CALIA No. 62461 Exp. 9/30/13 CIVIL STATE OF CALIFORNIA

THE STATE OF CALIFORNIA OR ITS OFFICERS OR AGENTS SHALL NOT BE RESPONSIBLE FOR THE ACCURACY OR COMPLETENESS OF SCANNED COPIES OF THIS PLAN SHEET.

FEHR & PEERS
2990 LAVA RIDGE COURT
ROSEVILLE, CA 95661

CITY OF CHICO
CAPITAL PROJECT SERVICES
411 MAIN STREET
CHICO, CA 95927

PROPOSED POLE AND EQUIPMENT SCHEDULE

	STANDARD			VEH SIG MTG				PED SIGNAL MOUNTING		PPB		LED LUM TYPE	SPECIAL REQUIREMENTS
No.	TYPE	SMA	LMA	ø	MAST ARM	ø	POLE	ø	MOUNTING	ø	ARROW		
Ⓐ	26-4-100	45'	12'	1 6 6	MAT MAS MAS	6	SV-1-T	4	SP-1-T	4	←	ROADWAY 1	INSTALL R73-2(CA) ON SIGNAL MAST ARM. INSTALL G7-1(CA)(Forest Ave) AT JUNCTION OF SIGNAL MAST ARM AND SIGNAL POLE.
Ⓑ	1-B	–	–	–	–	3 4	TV-2-T	6	SP-1-T	6	→	–	
Ⓒ	24-4-100	35'	12'	3 8	MAT MAS	8	SV-1-T	8	SP-1-T	–	–	ROADWAY 1	INSTALL R73-6(CA) ON SIGNAL MAST ARM.
Ⓓ	PPB POST	–	–	–	–	–	–	–	–	6	←	–	
Ⓔ	1-B	–	–	–	–	5 6	TV-2-T	6	SP-1-T	8	→	–	
Ⓕ	61-5-100	60'	15'	5 2 2	MAT MAS MAS	2	SV-1-T	–	–	8	←	ROADWAY 1	INSTALL R73-2(CA) ON SIGNAL MAST ARM. INSTALL G7-1(CA)(Forest Ave) AT JUNCTION OF SIGNAL MAST ARM AND SIGNAL POLE.
Ⓖ	1-B [7']	–	–	–	–	–	–	8 2	TP-2-T	–	–	–	
Ⓗ	1-B	–	–	–	–	7 8	TV-2-T	–	–	2	→	–	
Ⓘ	26-4-100	45'	12'	7 4	MAT MAS	4	SV-1-T	–	–	2	←	ROADWAY 1	INSTALL R73-3(CA) ON SIGNAL MAST ARM.
Ⓙ	1-B [7']	–	–	–	–	–	–	2 4	TP-2-T	–	–	–	
Ⓚ	15TS	–	12'	–	–	1 2	SV-2-TA	–	–	4	→	ROADWAY 1	

CONDUCTOR SCHEDULE

CONDUCTOR DESIGNATION			NUMBER OF CONDUCTORS											
			RUN NUMBER											
CABLE TYPE	STD	PHASE	1	2	3	4	5	6	7	8	9	10	11	12
VEH-PED 12CSC	Ⓐ	1,6,4P / 4P					1 / 1	1 / 1						
	Ⓑ	3,4,6P / 6P				1 / 1	1 / 1	1 / 1						
	Ⓒ	3,8,8P		1	1	1	1	1						
	Ⓓ	6P			1	1	1	1						
	Ⓔ	5,6,6P / 8P	1 / 1		1 / 1	1 / 1	1 / 1	1 / 1						
	Ⓕ	2,5 / 8P					1 / 1	1 / 1	1 / 1	1 / 1	1 / 1	1 / 1	1 / 1	1 / 1
	Ⓖ	2P,8P					1	1	1	1	1	1	1	
	Ⓗ	7,8 / 2P					1 / 1	1 / 1	1 / 1	1 / 1	1 / 1	1 / 1		
	Ⓘ	4,7 / 2P					1 / 1	1 / 1	1 / 1	1 / 1	1 / 1			
	Ⓙ	2P,4P					1	1	1	1				
PPB 3CSC	Ⓚ	1,2 / 4P					1 / 1	1 / 1	1 / 1					
TOTAL CABLES 12/3 CONDUCTORS			1 / 1	1 / –	2 / 2	3 / 3	10 / 8	10 / 8	6 / 4	5 / 3	4 / 3	3 / 2	2 / 1	1 / 1
#8	LIGHTING		–	2	2	2	2	–	2	2	2	2	2	2
#6	CONTROLLER POWER		–	–	–	–	–	2	–	–	–	–	–	–
TYPE B DLC	ø1		1		1	1	1	1						
	ø2						7	7	7					
	ø3						3	3	3	3	3	3		
	ø4					4	4	4						
	ø5						1	1	1					
	ø6		7		7	7	7	7						
	ø7					1	1	1						
	ø8						4	4	4	4	4	4		
TOTAL DLCs PER RUN			8	–	8	13	28	28	15	7	7	7	–	–
EVD			–	1	1	1	4	4	2	2	2	1	1	1
SIC			1	–	1	1	2	2	1	1	1	–	–	–
CONDUIT SIZE			3"	2"	2-3"	2-3"	2-4"	2-4"	2-4"	2-3"	2-3"	2-3"	3"	3"
PERCENT FILL			17	23	15	21	33	34	19	25	22	16	18	12

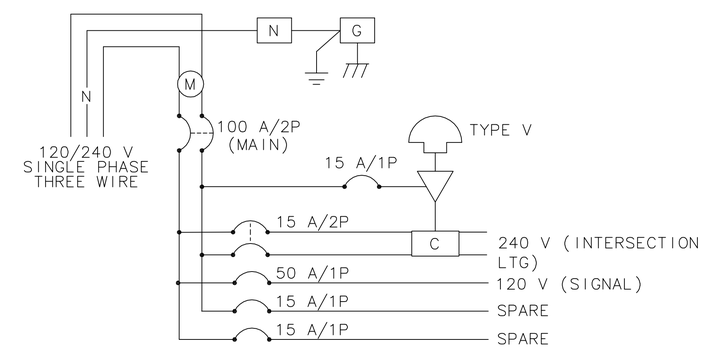

SERVICE WIRING DIAGRAM 'A'
CTID No. 03120320011000

MODIFY SIGNAL AND LIGHTING (LOCATION 1)

NO SCALE

E-3

THIS PLAN IS ACCURATE FOR ELECTRICAL WORK ONLY

STATE OF CALIFORNIA – DEPARTMENT OF TRANSPORTATION
Caltrans
CONSULTANT FUNCTIONAL SUPERVISOR: KRISTIN CALIA
CALCULATED-DESIGNED BY: JOE ANDERSON
CHECKED BY: KRISTIN CALIA
REVISED BY
DATE REVISED

LAST REVISION 00-00-00
DATE PLOTTED => $DATE
TIME PLOTTED => $TIME

Dist	COUNTY	ROUTE	POST MILES TOTAL PROJECT	SHEET No.	TOTAL SHEETS
03	But	32	10.3/11.3	92	144

Kristin D. Calia 12-22-11
REGISTERED CIVIL ENGINEER DATE

DECEMBER 22, 2011
PLANS APPROVAL DATE

REGISTERED PROFESSIONAL ENGINEER
K. CALIA
No. 62461
Exp. 9/30/13
CIVIL
STATE OF CALIFORNIA

THE STATE OF CALIFORNIA OR ITS OFFICERS OR AGENTS SHALL NOT BE RESPONSIBLE FOR THE ACCURACY OR COMPLETENESS OF SCANNED COPIES OF THIS PLAN SHEET.

FEHR & PEERS
2990 LAVA RIDGE COURT
ROSEVILLE, CA 95661

CITY OF CHICO
CAPITAL PROJECT SERVICES
411 MAIN STREET
CHICO, CA 95927

FOR ACCURATE RIGHT OF WAY AND ACCESS DATA, CONTACT RIGHT OF WAY ENGINEERING AT THE DISTRICT OFFICE.

PROJECT NOTES:

4 RC Exist SIGNAL POLE. RS ALL Exist VEHICLE AND PEDESTRIAN SIGNAL HEADS.

16 Exist PG&E SECONDARY PULL BOX.

21 Exist 2"C, 2 dlc. REMOVE 2 dlc. INSTALL 2 DLC.

33 Exist 2"C, 1 sic. RC 1 sic. INSTALL 1 SIC FROM THE Exist CITY TRAFFIC SIGNAL CONTROLLER CABINET LOCATED ON THE SOUTHEAST CORNER OF THE FOREST AVE./HUMBOLDT RD. INTERSECTION TO THE NEW ROUTE 32/FOREST AVE. TRAFFIC SIGNAL CONTROLLER CABINET. (APPROX. 850')

38 MAINTAIN ALL LOOPS WITHIN LANES.

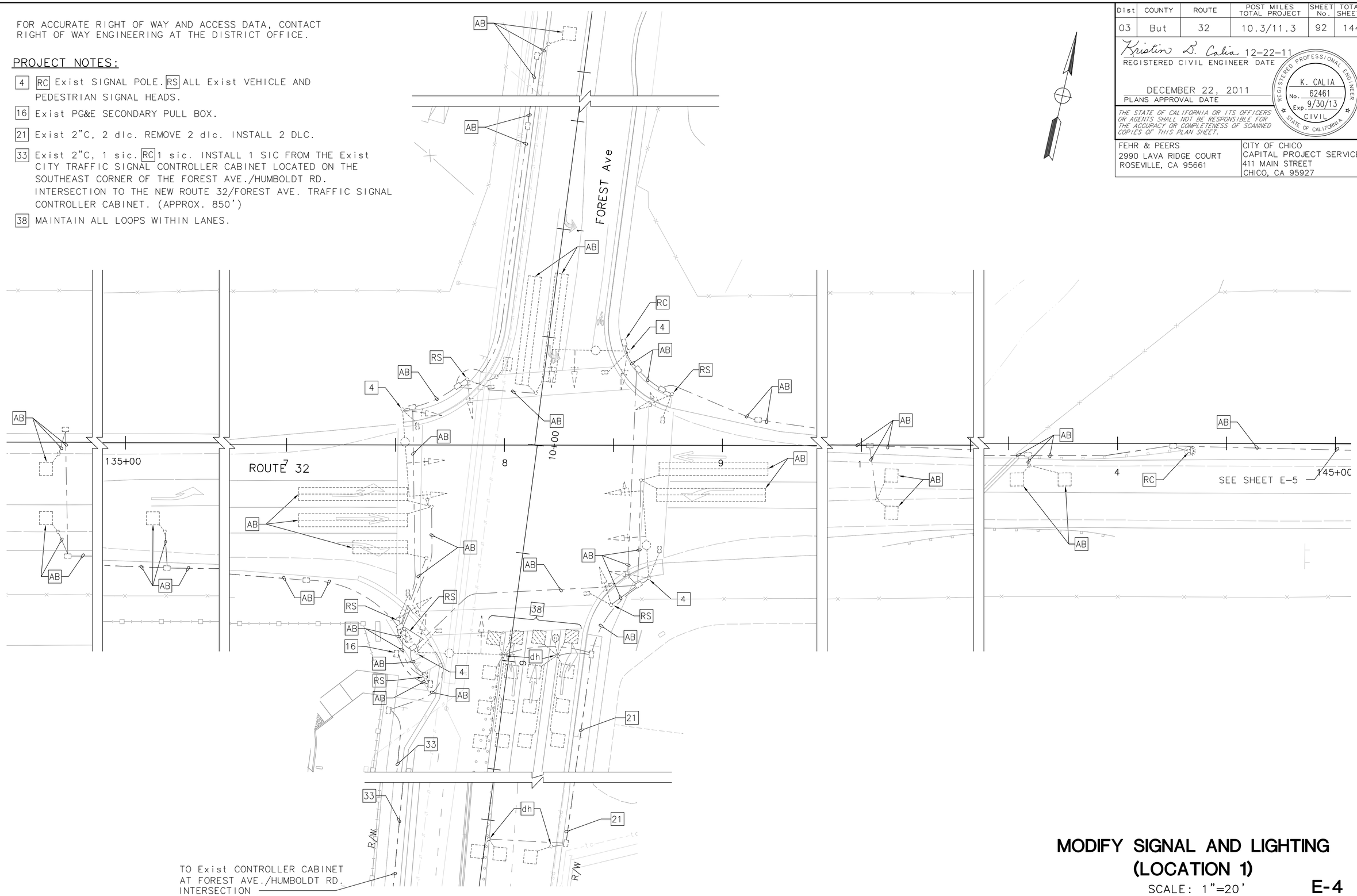

MODIFY SIGNAL AND LIGHTING (LOCATION 1)

SCALE: 1"=20'

E-4

THIS PLAN IS ACCURATE FOR ELECTRICAL WORK ONLY

STATE OF CALIFORNIA - DEPARTMENT OF TRANSPORTATION
Caltrans

CONSULTANT FUNCTIONAL SUPERVISOR: KRISTIN CALIA
CALCULATED-DESIGNED BY: JOE ANDERSON
CHECKED BY: KRISTIN CALIA
REVISED BY
DATE REVISED

LAST REVISION DATE PLOTTED => $DATE
00-00-00 TIME PLOTTED => $TIME

Dist	COUNTY	ROUTE	POST MILES TOTAL PROJECT	SHEET No.	TOTAL SHEETS
03	But	32	10.3/11.3	93	144

Kristin D. Calia 12-22-11
REGISTERED CIVIL ENGINEER DATE

DECEMBER 22, 2011
PLANS APPROVAL DATE

REGISTERED PROFESSIONAL ENGINEER K. CALIA No. 62461 Exp. 9/30/13 CIVIL STATE OF CALIFORNIA

THE STATE OF CALIFORNIA OR ITS OFFICERS OR AGENTS SHALL NOT BE RESPONSIBLE FOR THE ACCURACY OR COMPLETENESS OF SCANNED COPIES OF THIS PLAN SHEET.

FEHR & PEERS
2990 LAVA RIDGE COURT
ROSEVILLE, CA 95661

CITY OF CHICO
CAPITAL PROJECT SERVICES
411 MAIN STREET
CHICO, CA 95927

FOR ACCURATE RIGHT OF WAY AND ACCESS DATA, CONTACT RIGHT OF WAY ENGINEERING AT THE DISTRICT OFFICE.

PROJECT NOTES:

3 INSTALL LOOP DETECTORS PER LOOP DETECTOR LAYOUT DETAIL ON SHEET E-9.

5 Exist 2"C, 2 dlc, 1 sic.

6 Exist 2"C, 3 dlc, 1 sic.

7 Exist 2"C, 2#8 (240 V ltg), 2#6 (controller).

8 Exist Type III-AF METERED SERVICE EQUIPMENT ENCLOSURE TO REMAIN.

9 Exist Type B TELEPHONE DEMARCATION CABINET TO REMAIN.

10 Exist 2"C, 3 dlc, 1 sic. RC 1 sic, ADD 1 SIC.

11 Exist 2"C, 2 dlc, 1 sic. RC 1 sic, REMOVE AND REINSTALL dlc IN NEW 2" CONDUIT. INSTALL 1 SIC.

12 Exist 2"C, 1 dlc, 1 sic. RC 1 sic, REMOVE AND REINSTALL dlc IN NEW 2" CONDUIT. INSTALL 1 SIC.

13 Exist 2"C, 1-tc.

14 Exist 2"C, 1 dlc, 1 sic.

15 Exist 2"C, 3 dlc.

23 Exist 1-1/2"C, 1 dlc.

25 Exist 2070 CONTROLLER ASSEMBLY AND MODEL 332 CABINET TO REMAIN.

31 Exist 2"C, 1 dlc.

32 Exist 2"C, 1 sic.

47 2"C, 1 SIC.

61 Exist 2"C, 3#2 (service).

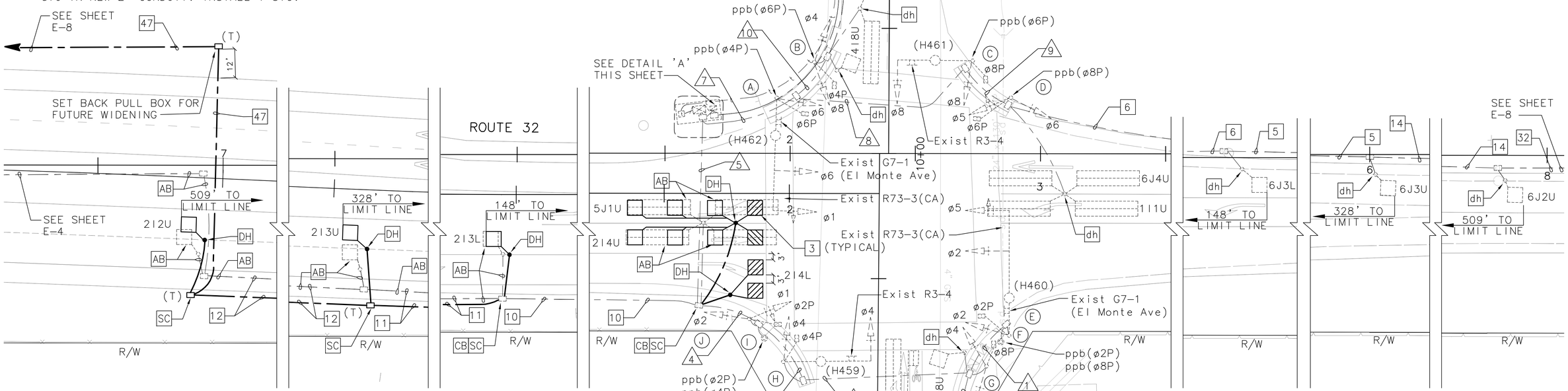

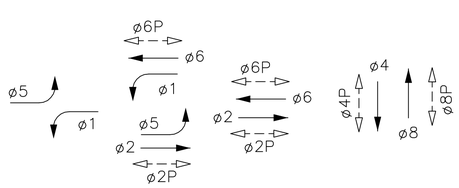

Exist PHASE DIAGRAM

DESIGN SPEED: ROUTE 32 (EB) = 55 MPH
ROUTE 32 (WB) = 45 MPH
EL MONTE Ave = 35 MPH

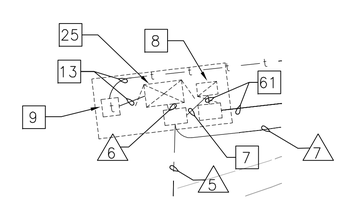

DETAIL 'A'
NO SCALE

THIS PLAN IS ACCURATE FOR ELECTRICAL WORK ONLY

MODIFY SIGNAL AND LIGHTING (LOCATION 2)

SCALE: 1"=20'

E-5

STATE OF CALIFORNIA - DEPARTMENT OF TRANSPORTATION
Caltrans
CONSULTANT FUNCTIONAL SUPERVISOR: KRISTIN CALIA
CALCULATED-DESIGNED BY: JOE ANDERSON
CHECKED BY: KRISTIN CALIA
REVISED BY
DATE REVISED

LAST REVISION 00-00-00
DATE PLOTTED => $DATE
TIME PLOTTED => $TIME

FOR ACCURATE RIGHT OF WAY AND ACCESS DATA, CONTACT
RIGHT OF WAY ENGINEERING AT THE DISTRICT OFFICE.

Dist	COUNTY	ROUTE	POST MILES TOTAL PROJECT	SHEET No.	TOTAL SHEETS
03	But	32	10.3/11.3	94	144

Kristin D. Calia 12-22-11
REGISTERED CIVIL ENGINEER DATE

DECEMBER 22, 2011
PLANS APPROVAL DATE

REGISTERED PROFESSIONAL ENGINEER K. CALIA No. 62461 Exp. 9/30/13 CIVIL STATE OF CALIFORNIA

THE STATE OF CALIFORNIA OR ITS OFFICERS OR AGENTS SHALL NOT BE RESPONSIBLE FOR THE ACCURACY OR COMPLETENESS OF SCANNED COPIES OF THIS PLAN SHEET.

FEHR & PEERS
2990 LAVA RIDGE COURT
ROSEVILLE, CA 95661

CITY OF CHICO
CAPITAL PROJECT SERVICES
411 MAIN STREET
CHICO, CA 95927

PROPOSED POLE AND EQUIPMENT SCHEDULE

	STANDARD			VEH SIG MTG				PED SIGNAL MOUNTING		PPB		HPS LUM (WATTS)	SPECIAL REQUIREMENTS
No.	TYPE	SMA	LMA	ø	MAST ARM	ø	POLE	ø	MOUNTING	ø	ARROW		
Ⓐ	(26-4-80)	(45')	(15')	1 6	(MAT) (MAS)	6	(SV-1-T)	6	(SP-1-T)	4	(←—)	(200)	Exist TO REMAIN.
Ⓑ	(1-B)	–	–	–	–	4 8	(TV-2-T)	4	(SP-1-T)	6	(—→)	–	Exist TO REMAIN.
Ⓒ	(19-3-80)	(30')	(15')	8	(MAS)	8	(SV-1-T)	8	(SP-1-T)	6	(←—)	–	Exist TO REMAIN.
Ⓓ	(1-B)	–	–	–	–	6 5	(TV-2-T)	6	(SP-1-T)	8	(—→)	–	Exist TO REMAIN.
Ⓔ	(29-5-80)	(50')	(15')	5 2	(MAT) (MAS)	2	(SV-1-T)	2	(SP-1-T)	–	–	(200)	Exist TO REMAIN.
Ⓕ	(PPB POST)	–	–	–	–	–	–	–	–	2 8	(—→) (←—)	–	Exist TO REMAIN.
Ⓖ	(1-B)	–	–	–	–	4 8	(TV-2-T)	8	(SP-1-T)	–	–	–	Exist TO REMAIN.
Ⓗ	(24-4-80)	(35')	(15')	4	(MAT)	4	(SV-1-T)	4	(SP-1-T)	–	–	(200)	Exist TO REMAIN.
Ⓘ	(PPB POST)	–	–	–	–	–	–	–	–	2 4	(—→) (—→)	–	Exist TO REMAIN.
Ⓙ	(1-B)	–	–	–	–	1 2	(TV-2-T)	2	(SP-1-T)	–	–	–	Exist TO REMAIN.

( ) = DENOTES EXISTING

CONDUCTOR SCHEDULE

CONDUCTOR DESIGNATION			NUMBER OF CONDUCTORS									
			RUN NUMBER									
CABLE TYPE	STD	PHASE	1	2	3	4	5	6	7	8	9	10
VEH-PED 12CSC	Ⓐ	1,6,6P / 4P						(1) / (1)	(1) / (1)			
	Ⓑ	4,8,4P / 6P						(1) / (1)	(1) / (1)			(1) / (1)
	Ⓒ	8,8P / 6P						(1) / (1)	(1) / (1)	(1) / (1)		
	Ⓓ	5,6,6P / 8P						(1) / (1)	(1) / (1)	(1) / (1)	(1) / (1)	
	Ⓔ	2,5,2P	(1)	(1)	(1)	(1)	(1)	(1)				
	Ⓕ	2P,8P	(1)	(1)	(1)	(1)	(1)	(1)				
	Ⓖ	4,8,8P		(1)	(1)	(1)	(1)	(1)				
	Ⓗ	4,4P			(1)	(1)	(1)	(1)				
PPB 3CSC	Ⓘ	2P,4P				(1)	(1)	(1)				
	Ⓙ	1,2,2P				(1)	(1)	(1)				
TOTAL CABLES 12/3 CONDUCTORS			(1) / (1)	(2) / (1)	(3) / (1)	(4) / (2)	(4) / (2)	(8) / (6)	(4) / (4)	(2) / (2)	(1) / (1)	(1) / (1)
#8	LIGHTING		(2)	(2)	(2)	(2)	(2)	–	(2)	(2)	–	–
#6	CONTROLLER POWER							(2)				
TYPE B DLC	ø1							(1)	(1)	(1)	(1)	
	ø2						1 / (4)	1 / (4)				
	ø4							(3)	(3)			(3)
	ø5						(1)	(1)				
	ø6							(4)	(4)	(4)	(4)	
	ø8			(4)	(4)	(4)	(4)	(4)				
TOTAL DLCs PER RUN			–	(4)	(4)	(4)	1 / (9)	1 / (17)	(8)	(5)	(5)	(3)
SIC							1	1 / (1)	(1)	(1)	(1)	
CONDUIT SIZE			2"	3"	3"	3"	2–3"	2–4"	4"	3"	2"	2"
NEW/EXISTING			E	E	E	E	E	E	E	E	E	E
PERCENT FILL			19	18	23	30	18	21	23	23	31	22

( ) = DENOTES EXISTING

MODIFY SIGNAL AND LIGHTING (LOCATION 2)

NO SCALE

E-6

THIS PLAN IS ACCURATE FOR ELECTRICAL WORK ONLY

STATE OF CALIFORNIA – DEPARTMENT OF TRANSPORTATION
Caltrans®

CONSULTANT FUNCTIONAL SUPERVISOR: KRISTIN CALIA
CALCULATED-DESIGNED BY: JOE ANDERSON
CHECKED BY: KRISTIN CALIA
REVISED BY
DATE REVISED

LAST REVISION 00-00-00
DATE PLOTTED => $DATE
TIME PLOTTED => $TIME

FOR ACCURATE RIGHT OF WAY AND ACCESS DATA, CONTACT
RIGHT OF WAY ENGINEERING AT THE DISTRICT OFFICE.

PROJECT NOTES:

18 2"C, MT.

Dist	COUNTY	ROUTE	POST MILES TOTAL PROJECT	SHEET No.	TOTAL SHEETS
03	But	32	10.3/11.3	95	144

Kristin D. Calia 12-22-11
REGISTERED CIVIL ENGINEER DATE

DECEMBER 22, 2011
PLANS APPROVAL DATE

REGISTERED PROFESSIONAL ENGINEER
K. CALIA
No. 62461
Exp. 9/30/13
CIVIL
STATE OF CALIFORNIA

THE STATE OF CALIFORNIA OR ITS OFFICERS OR AGENTS SHALL NOT BE RESPONSIBLE FOR THE ACCURACY OR COMPLETENESS OF SCANNED COPIES OF THIS PLAN SHEET.

FEHR & PEERS
2990 LAVA RIDGE COURT
ROSEVILLE, CA 95661

CITY OF CHICO
CAPITAL PROJECT SERVICES
411 MAIN STREET
CHICO, CA 95927

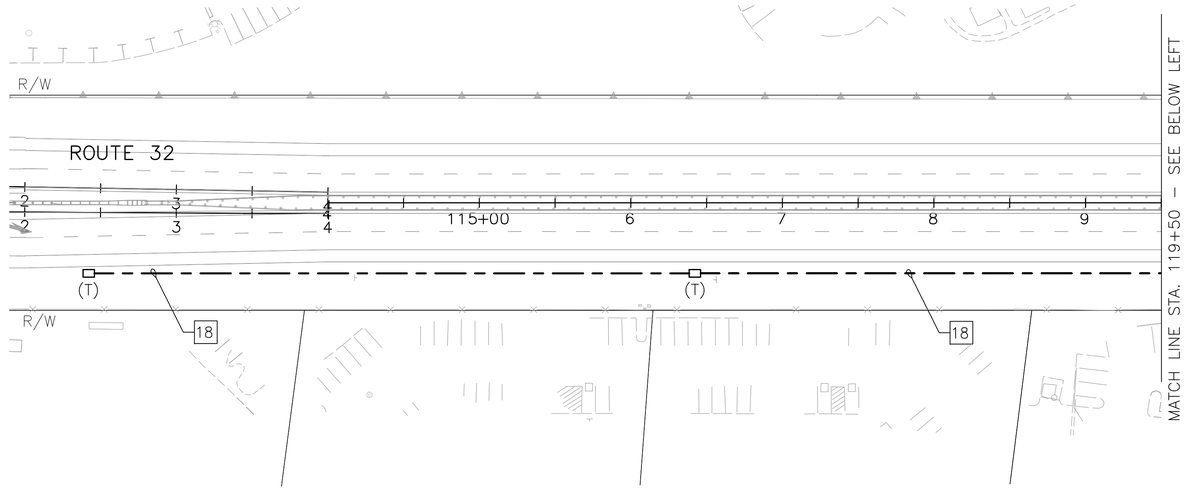

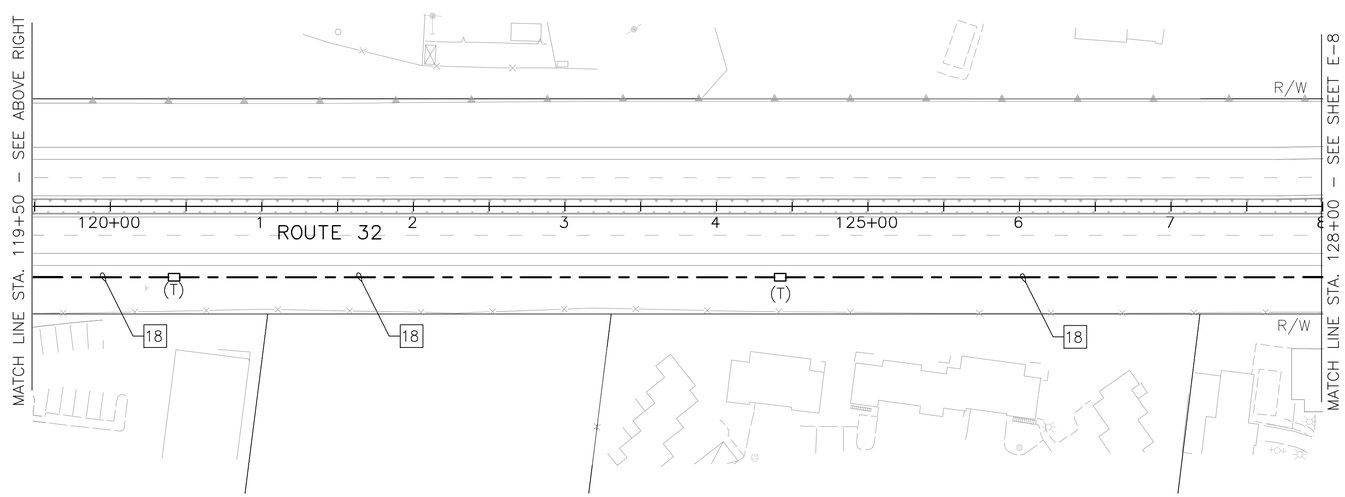

INTERCONNECTION CONDUIT AND CABLE

SCALE: 1"=50'

E-7

THIS PLAN IS ACCURATE FOR ELECTRICAL WORK ONLY

STATE OF CALIFORNIA - DEPARTMENT OF TRANSPORTATION
Caltrans

CONSULTANT FUNCTIONAL SUPERVISOR: KRISTIN CALIA
CALCULATED-DESIGNED BY: JOE ANDERSON
CHECKED BY: KRISTIN CALIA
REVISED BY
DATE REVISED

LAST REVISION 00-00-00
DATE PLOTTED => $DATE
TIME PLOTTED => $TIME

Dist	COUNTY	ROUTE	POST MILES TOTAL PROJECT	SHEET No.	TOTAL SHEETS
03	But	32	10.3/11.3	96	144

Kristin D. Calia 12-22-11
REGISTERED CIVIL ENGINEER DATE

DECEMBER 22, 2011
PLANS APPROVAL DATE

REGISTERED PROFESSIONAL ENGINEER
K. CALIA
No. 62461
Exp. 9/30/13
CIVIL
STATE OF CALIFORNIA

THE STATE OF CALIFORNIA OR ITS OFFICERS OR AGENTS SHALL NOT BE RESPONSIBLE FOR THE ACCURACY OR COMPLETENESS OF SCANNED COPIES OF THIS PLAN SHEET.

FEHR & PEERS
2990 LAVA RIDGE COURT
ROSEVILLE, CA 95661

CITY OF CHICO
CAPITAL PROJECT SERVICES
411 MAIN STREET
CHICO, CA 95927

FOR ACCURATE RIGHT OF WAY AND ACCESS DATA, CONTACT RIGHT OF WAY ENGINEERING AT THE DISTRICT OFFICE.

PROJECT NOTES:

18 2"C, MT.

19 2" TYPE 1 CONDUIT, 1 SIC.

20 INSTALL CONDUIT IN NEW STRUCTURE. SEE STRUCTURE PLANS FOR DETAILS.

32 Exist 2"C, 1 sic.

47 2"C, 1 SIC.

51 3" TYPE 1 CONDUIT, FUTURE USE.

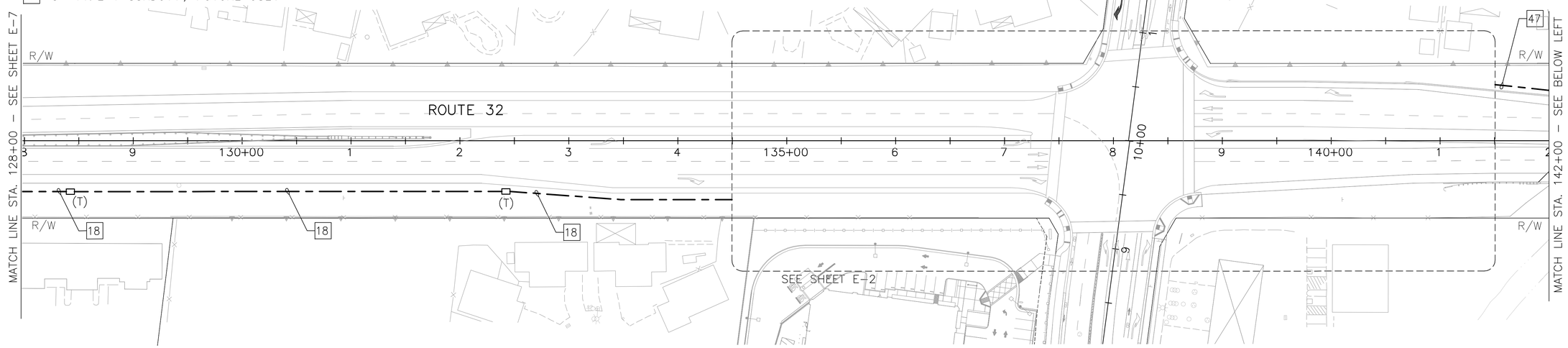

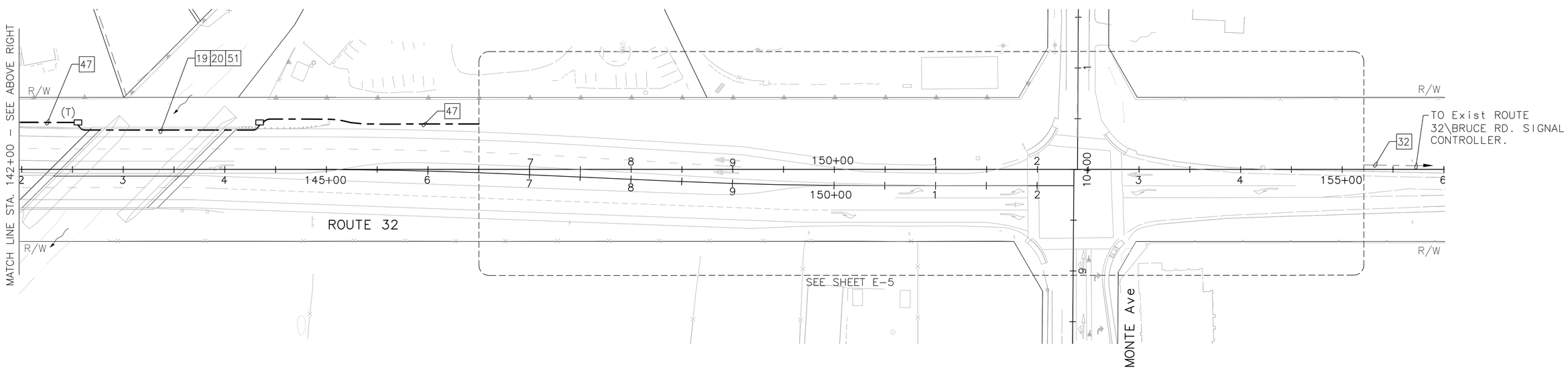

INTERCONNECTION CONDUIT AND CABLE

SCALE: 1"=50'

E-8

THIS PLAN IS ACCURATE FOR ELECTRICAL WORK ONLY

STATE OF CALIFORNIA - DEPARTMENT OF TRANSPORTATION
Caltrans

CONSULTANT FUNCTIONAL SUPERVISOR: KRISTIN CALIA
CALCULATED-DESIGNED BY: JOE ANDERSON
CHECKED BY: KRISTIN CALIA
REVISED BY
DATE REVISED

LAST REVISION 00-00-00
DATE PLOTTED => $DATE
TIME PLOTTED => $TIME

Dist	COUNTY	ROUTE	POST MILES TOTAL PROJECT	SHEET No.	TOTAL SHEETS
03	But	32	10.3/11.3	97	144

Kristin D. Calia 12-22-11
REGISTERED CIVIL ENGINEER DATE

DECEMBER 22, 2011
PLANS APPROVAL DATE

REGISTERED PROFESSIONAL ENGINEER K. CALIA No. 62461 Exp. 9/30/13 CIVIL STATE OF CALIFORNIA

THE STATE OF CALIFORNIA OR ITS OFFICERS OR AGENTS SHALL NOT BE RESPONSIBLE FOR THE ACCURACY OR COMPLETENESS OF SCANNED COPIES OF THIS PLAN SHEET.

FEHR & PEERS
2990 LAVA RIDGE COURT
ROSEVILLE, CA 95661

CITY OF CHICO
CAPITAL PROJECT SERVICES
411 MAIN STREET
CHICO, CA 95927

FOR ACCURATE RIGHT OF WAY AND ACCESS DATA, CONTACT RIGHT OF WAY ENGINEERING AT THE DISTRICT OFFICE.

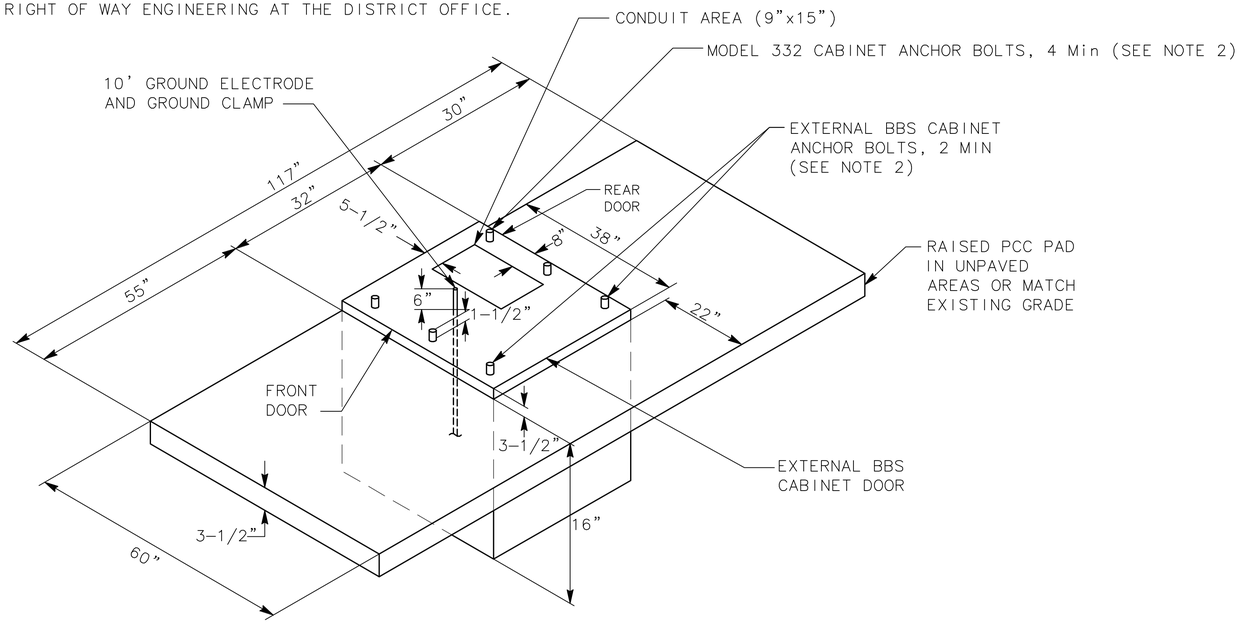

MODIFIED MODEL 332 CABINET FOUNDATION DETAIL FOR BATTERY BACKUP SYSTEM (BBS)

(FOR DIMENSIONS AND DETAILS NOT SHOWN AND ADDITIONAL NOTES, SEE SHEET ES-3C OF THE STANDARD PLANS FOR MODEL 332 CABINET)

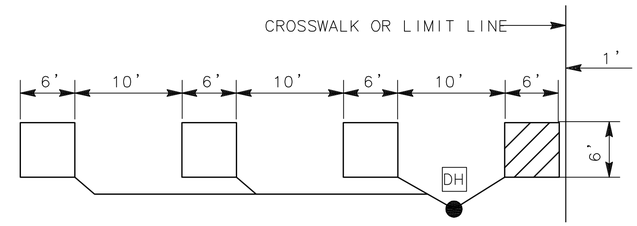

INSTALL LOOP TURNS PER ES-5B, NOTE 2

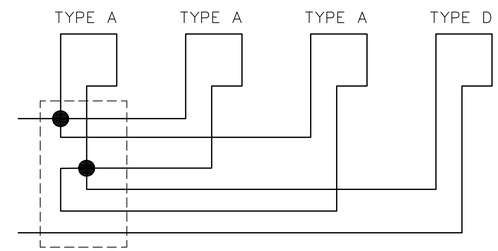

LOOP CONNECTION DIAGRAM

LOOP DETECTOR LAYOUT DETAIL

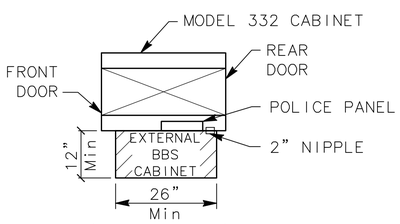

(TOP VIEW)

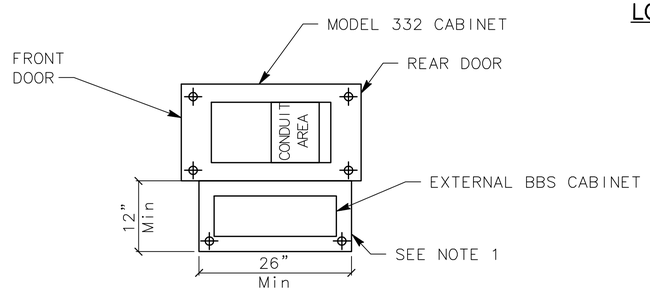

BASE PLAN FOR BBS MOUNTED TO THE MODEL 332 CABINET

(FOR DIMENSIONS AND DETAILS NOT SHOWN, SEE SHEETS A6-1 TO A6-4, CABINET HOUSING DETAILS OF THE TRANSPORTATION ELECTRICAL EQUIPMENT SPECIFICATION (TEES))

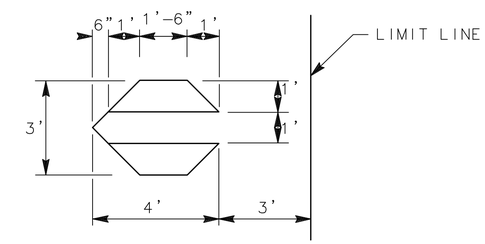

FOR ADDITIONAL DETAILS SEE ES-5B

MODIFIED TYPE D BIKE DETECTOR LOOP DETAIL

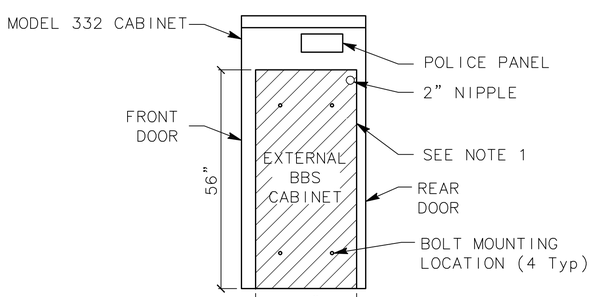

(SIDE VIEW)

EXTERNAL BBS CABINET MOUNTED TO THE MODEL 332 CABINET

NOTES:

1. THE EXTERNAL BBS CABINET SHALL BE MOUNTED TO THE MODEL 332 CABINET WITH FOUR 18-8 STAINLESS STEEL HEX HEAD, FULLY THREADED, 3/8"-16X1" BOLTS; TWO WASHERS PER BOLT, DESIGNED FOR 3/8" BOLTS AND ARE 18-8 STAINLESS STEEL, 1" OUTSIDE DIAMETER, ROUND, AND FLAT; AND ONE K-LOCK NUT PER BOLT THAT IS 18-8 STAINLESS STEEL AND HEX-NUT. THE ENGINEER WILL HAVE TO APPROVE THE BOLT MOUNTING LOCATION PRIOR TO INSTALLATION.

2. THE ANCHOR BOLT SHALL BE 3/4" Dia X 15" WITH A 2"-90° BEND. THE CABINET MANUFACTURER'S SPECIFICATION SHALL DETERMINE THE LOCATION OF THE ANCHOR BOLTS IN THE FOUNDATION. THE ENGINEER WILL HAVE TO APPROVE THE ANCHOR BOLTS AND ITS LOCATION IN THE FOUNDATION PRIOR TO CONNECTION.

3. THE CONTRACTOR SHALL VERIFY THE DIMENSIONS OF THE BBS CABINET PRIOR TO CONSTRUCTING THE FOUNDATION OF THE MODIFIED PORTION OF THE Std MODEL 332 CABINET FOUNDATION. THE ENGINEER WILL HAVE TO APPROVE ANY NECESSARY DEVIATIONS PRIOR TO CONSTRUCTION.

4. ALL DIMENSIONS ARE NOMINAL.

ELECTRICAL SYSTEMS
(BBS FOUNDATION DETAILS)

THIS PLAN IS ACCURATE FOR ELECTRICAL WORK ONLY

ELECTRICAL DETAILS

NO SCALE

E-9

REVISED BY	DATE REVISED
JOE ANDERSON	KRISTIN CALIA

CALCULATED-DESIGNED BY / CHECKED BY

CONSULTANT FUNCTIONAL SUPERVISOR: KRISTIN CALIA

STATE OF CALIFORNIA - DEPARTMENT OF TRANSPORTATION

Caltrans

LAST REVISION 00-00-00 | DATE PLOTTED => $DATE | TIME PLOTTED => $TIME

Dist	COUNTY	ROUTE	POST MILES TOTAL PROJECT	SHEET No.	TOTAL SHEETS
03	But	32	10.3/11.3	98	144

Kristin D. Calia 12-22-11
REGISTERED CIVIL ENGINEER DATE

DECEMBER 22, 2011
PLANS APPROVAL DATE

REGISTERED PROFESSIONAL ENGINEER K. CALIA No. 62461 Exp. 9/30/13 CIVIL STATE OF CALIFORNIA

THE STATE OF CALIFORNIA OR ITS OFFICERS OR AGENTS SHALL NOT BE RESPONSIBLE FOR THE ACCURACY OR COMPLETENESS OF SCANNED COPIES OF THIS PLAN SHEET.

FEHR & PEERS
2990 LAVA RIDGE COURT
ROSEVILLE, CA 95661

CITY OF CHICO
CAPITAL PROJECT SERVICES
411 MAIN STREET
CHICO, CA 95927

FOR ACCURATE RIGHT OF WAY AND ACCESS DATA, CONTACT RIGHT OF WAY ENGINEERING AT THE DISTRICT OFFICE.

PROJECT NOTES:

16 Exist PG&E SECONDARY PULL BOX.

17 Exist 2"C, 7 dlc. REMOVE 7 dlc, INSTALL 2 DLC.

21 Exist 2"C, 2 dlc. REMOVE 2 dlc, INSTALL 2 DLC.

23 Exist 1-1/2"C, 1 dlc.

24 Exist 2"C, 2 dlc.

32 Exist 2"C, 1 sic.

34 OVERHEAD MESSENGER WIRE (1/2 INCH 7-STRAND SPAN WIRE, 20 FT Min VERTICAL CLEARANCE). SEE DETAIL ON SHEET E-17.

35 VIDEO DETECTION ZONE. EXACT SIZE AND LOCATION TO BE DETERMINED BY THE ENGINEER IN THE FIELD.

36 INSTALL VIDEO DETECTION CAMERA ON TEMPORARY WOOD POLE. SEE INSTALLATION DETAIL ON SHEET E-17.

40 Exist 2#8 (lighting).

41 Exist 1-1/2"C, 1 sic.

43 2"C, 1 DLC.

50 INSTALL TEMPORARY WOOD POLE RC (40') WITH 200 W HPS LUMINAIRE. SEE DETAILS ON SHEET E-17. AFTER FINAL STAGE CONSTRUCTION.

55 Exist EQUIPMENT TO REMAIN.

57 Exist 2"C, 3#2 (service).

59 Exist 2"C, 2#4 (controller).

62 SPLICE NEW DLC TO EXISTING LOOP WIRES.

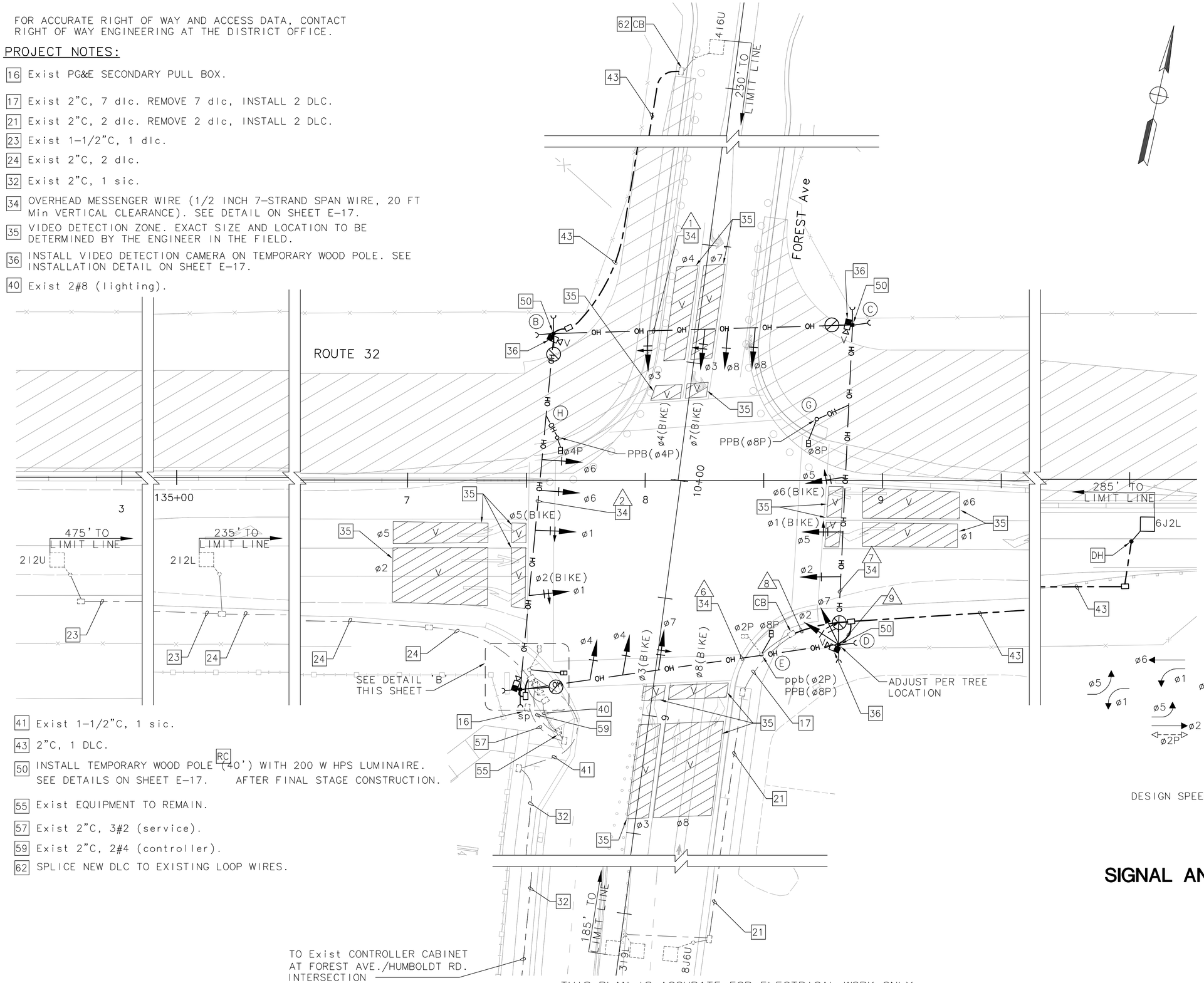

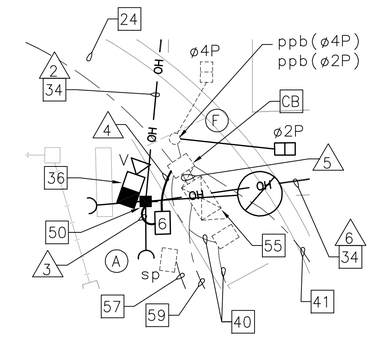

DETAIL 'B'
NOT TO SCALE

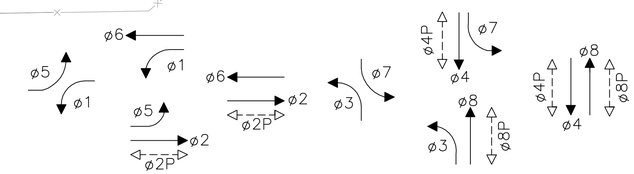

PHASE DIAGRAM

DESIGN SPEED: FOREST AVE = 35 MPH
ROUTE 32 = 45 MPH

SIGNAL AND LIGHTING (TEMPORARY) (STAGE 1) (LOCATION 1)

SCALE: 1"=20'

E-10

THIS PLAN IS ACCURATE FOR ELECTRICAL WORK ONLY

STATE OF CALIFORNIA - DEPARTMENT OF TRANSPORTATION
Caltrans

CONSULTANT FUNCTIONAL SUPERVISOR: KRISTIN CALIA
CALCULATED-DESIGNED BY: JOE ANDERSON
CHECKED BY: KRISTIN CALIA
REVISED BY
DATE REVISED

LAST REVISION 00-00-00
DATE PLOTTED => $DATE
TIME PLOTTED => $TIME

FOR ACCURATE RIGHT OF WAY AND ACCESS DATA, CONTACT
RIGHT OF WAY ENGINEERING AT THE DISTRICT OFFICE.

Dist	COUNTY	ROUTE	POST MILES TOTAL PROJECT	SHEET No.	TOTAL SHEETS
03	But	32	10.3/11.3	99	144

Kristin D. Calia 12-22-11
REGISTERED CIVIL ENGINEER DATE

DECEMBER 22, 2011
PLANS APPROVAL DATE

REGISTERED PROFESSIONAL ENGINEER K. CALIA No. 62461 Exp. 9/30/13 CIVIL STATE OF CALIFORNIA

THE STATE OF CALIFORNIA OR ITS OFFICERS OR AGENTS SHALL NOT BE RESPONSIBLE FOR THE ACCURACY OR COMPLETENESS OF SCANNED COPIES OF THIS PLAN SHEET.

FEHR & PEERS
2990 LAVA RIDGE COURT
ROSEVILLE, CA 95661

CITY OF CHICO
CAPITAL PROJECT SERVICES
411 MAIN STREET
CHICO, CA 95927

STAGE 1 POLE AND EQUIPMENT SCHEDULE

	STANDARD			VEH SIG MTG				PED SIGNAL MOUNTING		PPB		HPS LUM (WATTS)	SPECIAL REQUIREMENTS
No.	TYPE	SMA	LMA	ø	MAST ARM	ø	POLE	ø	MOUNTING	ø	ARROW		
Ⓐ	TEMP WOOD POLE – 40'	–	12'	1 1 6 6	SW-1 SW-1 SW-1 SW-1	–	–	–	–	–	–	200	
Ⓑ	TEMP WOOD POLE – 40'	–	12'	3 3 8 8	SW-1 SW-1 SW-1 SW-1	–	–	–	–	–	–	200	
Ⓒ	TEMP WOOD POLE – 40'	–	12'	5 5 2	SW-1 SW-1 SW-1	–	–	–	–	–	–	200	
Ⓓ	TEMP WOOD POLE – 40'	–	12'	7 4 4	SW-1 SW-1 SW-1	2 7	SV-2-TA	–	–	–	–	200	
Ⓔ	(1-B)	–	–	–	–	–	–	2 8	(SP-1-T) SP-2-T	2 8	(→) →	–	
Ⓕ	(1-B)	–	–	–	–	–	–	2 4	SP-1-T (SP-2-T)	2 4	(→) (→)	–	
Ⓖ	TEMPORARY 1-B	–	–	–	–	–	–	8	SP-1-T	8	→	–	
Ⓗ	TEMPORARY 1-B	–	–	–	–	–	–	4	SP-1-T	4	←	–	

( ) = DENOTES EXISTING

STAGE 1 CONDUCTOR SCHEDULE

AWG	CONDUCTOR DESIGNATION	NUMBER OF CONDUCTORS RUN NUMBER 1	2	3	4	5	6	7	8	9
#14	ø1		3	3	3	3				
	ø2			3	3	3	3	3		
	ø3	3	3	3	3	3				
	ø4			3	3	3	3			
	ø5			3	3	3	3	3		
	ø6		3	3	3	3				
	ø7			3	3	3	3			
	ø8	3	3	3	3	3				
	ø2P			2	2	4	2		2	2
	ø4P		2	2	2	4				
	ø8P			2	2	2	2	2	2	2
	PPB(ø2P)			1	1	2	1		1	1
	PPB(ø4P)		1	1	1	2				
	PPB(ø8P)			1	1	1	1	1	1	1
	PPB COMMON		1	1	1	1	1	1	1	1
	TOTAL #14	6	16	34	34	40	19	10	7	7
#10	SIGNAL COMMON	1	1	1	1	1	1	1	1	1
#8	LUMINAIRE	2	2	2	2	–	2	2	–	–
#4	CONTROLLER					(2)				
VIDEO DETECTION	VIDEO CABLE		1	4	4	4	2	1	–	–
	VIDEO POWER		1	4	4	4	2	1	–	–
DETECTOR LOOP CABLE	ø2					(2)				
	ø3			1	1	1	1		1	1
	ø4		1	1	1	1				
	ø6			1	1	1	1			1
	ø8			1	1	1	1		1	1
	TOTAL DLC	–	1	4	4	6	3	–	2	3
Exist SIC						(1)				
	CONDUIT SIZE	N/A	N/A	3"	3"	(2-3")	N/A	N/A	2"	2"

( ) = DENOTES EXISTING

SIGNAL AND LIGHTING (TEMPORARY) (STAGE 1) (LOCATION 1)

NO SCALE

E-11

THIS PLAN IS ACCURATE FOR ELECTRICAL WORK ONLY

STATE OF CALIFORNIA – DEPARTMENT OF TRANSPORTATION
Caltrans

CONSULTANT FUNCTIONAL SUPERVISOR: KRISTIN CALIA
CALCULATED-DESIGNED BY: JOE ANDERSON
CHECKED BY: KRISTIN CALIA
REVISED BY
DATE REVISED

LAST REVISION 00-00-00
DATE PLOTTED => $DATE
TIME PLOTTED => $TIME

Dist	COUNTY	ROUTE	POST MILES TOTAL PROJECT	SHEET No.	TOTAL SHEETS
03	But	32	10.3/11.3	100	144

Kristin D. Calia 12-22-11
REGISTERED CIVIL ENGINEER DATE

DECEMBER 22, 2011
PLANS APPROVAL DATE

REGISTERED PROFESSIONAL ENGINEER K. CALIA No. 62461 Exp. 9/30/13 CIVIL STATE OF CALIFORNIA

THE STATE OF CALIFORNIA OR ITS OFFICERS OR AGENTS SHALL NOT BE RESPONSIBLE FOR THE ACCURACY OR COMPLETENESS OF SCANNED COPIES OF THIS PLAN SHEET.

FEHR & PEERS
2990 LAVA RIDGE COURT
ROSEVILLE, CA 95661

CITY OF CHICO
CAPITAL PROJECT SERVICES
411 MAIN STREET
CHICO, CA 95927

FOR ACCURATE RIGHT OF WAY AND ACCESS DATA, CONTACT RIGHT OF WAY ENGINEERING AT THE DISTRICT OFFICE.

PROJECT NOTES:

1. INSTALL STATE-FURNISHED MODEL 332 CABINET INCLUDING MODEL 2070 CONTROLLER, 2070 6-A MODEM, EXTENDED BATTERY BACKUP SYSTEM CABINET AND BATTERY BACKUP SYSTEM COMPONENTS AND MAKE FINAL CONNECTIONS. FURNISH AND INSTALL BATTERY BACKUP SYSTEM BATTERIES AND DRAWER SHELF ASSEMBLY.
2. INSTALL 12'X 5'X 3.5" PCC CONTROLLER PAD AND CONTROLLER/BBS FOUNDATION. SEE SHEET E-9 FOR PAD AND FOUNDATION DETAILS.
16. Exist PG&E SECONDARY PULL BOX. PG&E TO MAKE ALL FINAL CONNECTIONS.
22. Exist 2"C, 2 dlc. REMOVE AND REINSTALL 2 dlc.
28. 2"C, 2 DLC.
31. Exist 2"C, 1 dlc.
32. Exist 2"C, 1 sic.
35. VIDEO DETECTION ZONE. EXACT SIZE AND LOCATION TO BE DETERMINED BY THE ENGINEER IN THE FIELD.
42. REMOVE AND REINSTALL Exist 1 sic. IN NEW 1-1/2"C.
43. 2"C, 1 DLC.
45. NOT A PART OF THIS BID ITEM. SEE MODIFY SIGNAL AND LIGHTING PLANS.

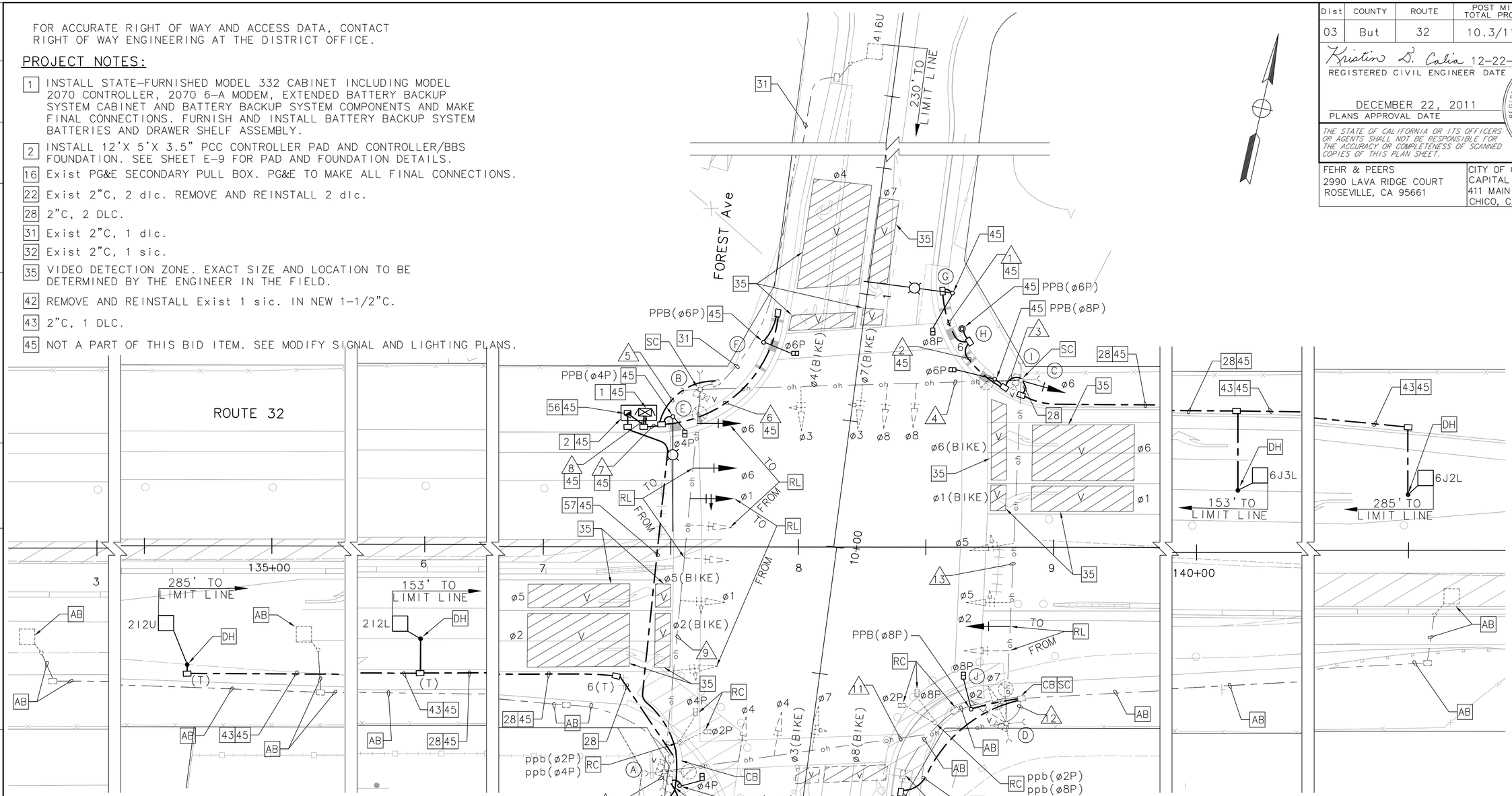

56. FURNISH AND INSTALL TYPE III-AF SERVICE EQUIPMENT ENCLOSURE PER SERVICE WIRING DIAGRAM 'A' ON SHEET E-3.
57. 2"C, 3#2 (SERVICE).

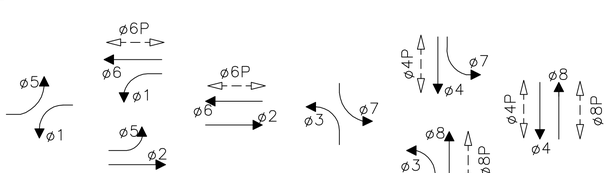

PHASE DIAGRAM

DESIGN SPEED: FOREST Ave = 35 MPH
ROUTE 32 = 45 MPH

TO Exist CONTROLLER CABINET AT FOREST AVE/HUMBOLDT RD. INTERSECTION

THIS PLAN IS ACCURATE FOR ELECTRICAL WORK ONLY

SIGNAL AND LIGHTING (TEMPORARY) (STAGE 2) (LOCATION 1)

SCALE: 1"=20'

E-12

STATE OF CALIFORNIA - DEPARTMENT OF TRANSPORTATION
Caltrans

CONSULTANT FUNCTIONAL SUPERVISOR: KRISTIN CALIA
CALCULATED-DESIGNED BY: JOE ANDERSON
CHECKED BY: KRISTIN CALIA
REVISED BY / DATE REVISED

LAST REVISION 00-00-00
DATE PLOTTED => $DATE
TIME PLOTTED => $TIME

FOR ACCURATE RIGHT OF WAY AND ACCESS DATA, CONTACT
RIGHT OF WAY ENGINEERING AT THE DISTRICT OFFICE.

Dist	COUNTY	ROUTE	POST MILES TOTAL PROJECT	SHEET No.	TOTAL SHEETS
03	But	32	10.3/11.3	101	144

Kristin D. Calia 12-22-11
REGISTERED CIVIL ENGINEER DATE

DECEMBER 22, 2011
PLANS APPROVAL DATE

REGISTERED PROFESSIONAL ENGINEER K. CALIA No. 62461 Exp. 9/30/13 CIVIL STATE OF CALIFORNIA

THE STATE OF CALIFORNIA OR ITS OFFICERS OR AGENTS SHALL NOT BE RESPONSIBLE FOR THE ACCURACY OR COMPLETENESS OF SCANNED COPIES OF THIS PLAN SHEET.

FEHR & PEERS
2990 LAVA RIDGE COURT
ROSEVILLE, CA 95661

CITY OF CHICO
CAPITAL PROJECT SERVICES
411 MAIN STREET
CHICO, CA 95927

STAGE 2 POLE AND EQUIPMENT SCHEDULE

	STANDARD			VEH SIG MTG				PED SIGNAL MOUNTING		PPB		HPS LUM (WATTS)	SPECIAL REQUIREMENTS
No.	TYPE	SMA	LMA	ø	MAST ARM	ø	POLE	ø	MOUNTING	ø	ARROW		
Ⓐ	(TEMP WOOD POLE – 40')	–	(12')	1 1 6 6	(SW-1) SW-1 SW-1 SW-1	–	–	–	–	–	–	(200)	
Ⓑ	(TEMP WOOD POLE – 40')	–	(12')	3 3 8 8	(SW-1) (SW-1) (SW-1) (SW-1)	–	–	–	–	–	–	(200)	
Ⓒ	(TEMP WOOD POLE – 40')	–	(12')	5 5 2	(SW-1) (SW-1) SW-1	6	SV-1-T	–	–	–	–	(200)	
Ⓓ	(TEMP WOOD POLE – 40')	–	(12')	7 4 4	(SW-1) (SW-1) (SW-1)	2 7	(SV-2-TA)	–	–	–	–	(200)	
Ⓔ	ULTIMATE SIGNAL POLE	–	–	–	–	–	–	4	(SP-1-T)	4	(←)	–	USE ULTIMATE PEDESTRIAN SIGNAL AND PUSH BUTTON DURING THIS STAGE.
Ⓕ	ULTIMATE SIGNAL POLE	–	–	–	–	–	–	6	(SP-1-T)	6	(→)	–	USE ULTIMATE PEDESTRIAN SIGNAL AND PUSH BUTTON DURING THIS STAGE.
Ⓖ	ULTIMATE SIGNAL POLE	–	–	–	–	–	–	8	(SP-1-T)	–	–	–	USE ULTIMATE PEDESTRIAN SIGNAL DURING THIS STAGE.
Ⓗ	ULTIMATE SIGNAL POLE	–	–	–	–	–	–	–	–	6	(←)	–	USE ULTIMATE PEDESTRIAN PUSH BUTTON DURING THIS STAGE.
Ⓘ	ULTIMATE SIGNAL POLE	–	–	–	–	–	–	6	(SP-1-T)	8	(→)	–	USE ULTIMATE PEDESTRIAN SIGNAL AND PUSH BUTTON DURING THIS STAGE.
Ⓙ	TEMPORARY 1-B	–	–	–	–	–	–	8	SP-1-T	8	→	–	
Ⓚ	TEMPORARY 1-B	–	–	–	–	–	–	4	SP-1-T	4	→	–	

( ) = DENOTES EXISTING

STAGE 2 CONDUCTOR SCHEDULE

AWG	CONDUCTOR DESIGNATION	NUMBER OF CONDUCTORS RUN NUMBER												
		1	2	3	4	5	6	7	8	9	10	11	12	13
#14	ø1					3		3	3	3				
	ø2				3	3		3	3					3
	ø3				3	3		3	3					
	ø4					3		3	3	3		3		
	ø5				3	3		3	3					3
	ø6				3	3		3	3	3				
	ø7					3		3	3	3		3		
	ø8				3	3		3	3					
	ø4P					2		2	2	2	2			
	ø6P			2	2	2	2	4	4					
	ø8P	2	2	2	2	2		2	2	2		2	2	
	PPB(ø4P)					1		2	2	1	1			
	PPB(ø6P)		1	1	1	1	1	2	2					
	PPB(ø8P)			1	1	1		1	1	1		1	1	
	PPB COMMON		1	1	1	1	1	1	1	1	1	1	1	
	TOTAL #14	2	4	7	22	34	4	38	38	19	4	10	4	6
#10	SIGNAL COMMON	1	1	1	1	1	1	1	1	1	1	1	1	1
#8	LUMINAIRE				2	2		2		2				2
#6	CONTROLLER								2					
VIDEO DETECTION	VIDEO CABLE				2	4		4	4	1				1
	VIDEO POWER				2	4		4	4	1				1
DETECTOR LOOP CABLE	ø2					2		2	2	2	2			
	ø3					1		1	1	1		1	1	
	ø4					1		1	1					
	ø6				2	2		2	2					
	ø8					1		1	1	1		1	1	
	TOTAL DLC	–	–	–	2	7	–	7	7	4	2	2	2	–
SIC						1		1	1	1	1			
	CONDUIT SIZE	2"	3"	2"	N/A	2"	2-3"	2-4"	2-4"	N/A	2"	N/A	2"	N/A

SIGNAL AND LIGHTING (TEMPORARY)
(STAGE 2)
(LOCATION 1)

NO SCALE

E-13

THIS PLAN IS ACCURATE FOR ELECTRICAL WORK ONLY

STATE OF CALIFORNIA – DEPARTMENT OF TRANSPORTATION
Caltrans
CONSULTANT FUNCTIONAL SUPERVISOR: KRISTIN CALIA
CALCULATED-DESIGNED BY: JOE ANDERSON
CHECKED BY: KRISTIN CALIA
REVISED BY
DATE REVISED

LAST REVISION 00-00-00
DATE PLOTTED => $DATE
TIME PLOTTED => $TIME

Dist	COUNTY	ROUTE	POST MILES TOTAL PROJECT	SHEET No.	TOTAL SHEETS
03	But	32	10.3/11.3	102	144

Kristin D. Calia 12-22-11
REGISTERED CIVIL ENGINEER DATE

DECEMBER 22, 2011
PLANS APPROVAL DATE

REGISTERED PROFESSIONAL ENGINEER K. CALIA No. 62461 Exp. 9/30/13 CIVIL STATE OF CALIFORNIA

THE STATE OF CALIFORNIA OR ITS OFFICERS OR AGENTS SHALL NOT BE RESPONSIBLE FOR THE ACCURACY OR COMPLETENESS OF SCANNED COPIES OF THIS PLAN SHEET.

FEHR & PEERS
2990 LAVA RIDGE COURT
ROSEVILLE, CA 95661

CITY OF CHICO
CAPITAL PROJECT SERVICES
411 MAIN STREET
CHICO, CA 95927

FOR ACCURATE RIGHT OF WAY AND ACCESS DATA, CONTACT RIGHT OF WAY ENGINEERING AT THE DISTRICT OFFICE.

PROJECT NOTES:

24 Exist 2"C, 2 dlc.

31 Exist 2"C, 1 dlc.

32 Exist 2"C, 1 sic.

35 VIDEO DETECTION ZONE. EXACT SIZE AND LOCATION TO BE DETERMINED BY THE ENGINEER IN THE FIELD.

39 Exist 1-1/2"C, 1 sic.

45 NOT PART OF THIS BID ITEM. SEE MODIFY SIGNAL AND LIGHTING PLANS.

61 Exist 2"C, 3#2 (service).

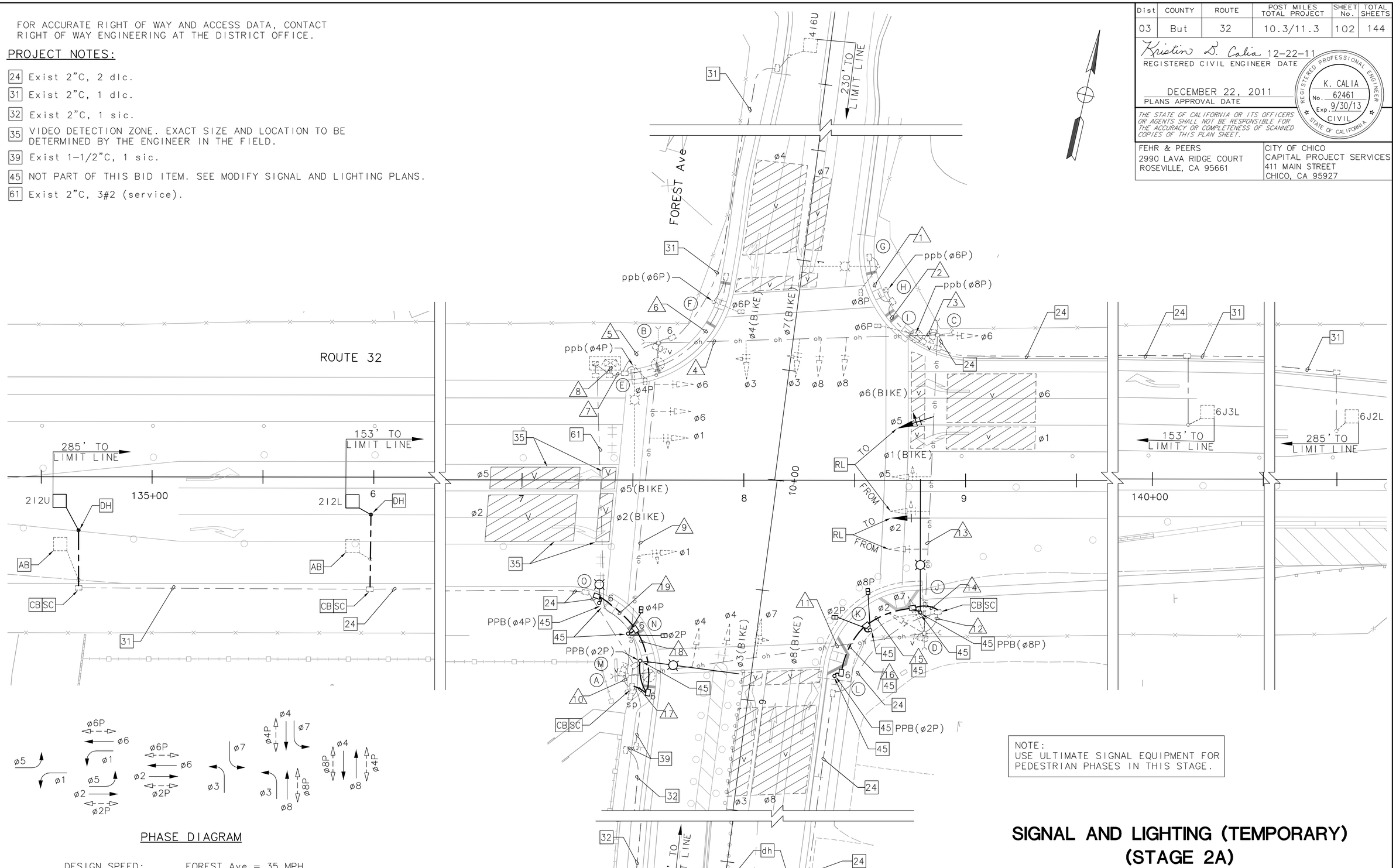

PHASE DIAGRAM

DESIGN SPEED: FOREST Ave = 35 MPH
ROUTE 32 = 45 MPH

TO Exist CONTROLLER CABINET AT FOREST AVE./HUMBOLDT RD. INTERSECTION

NOTE:
USE ULTIMATE SIGNAL EQUIPMENT FOR PEDESTRIAN PHASES IN THIS STAGE.

THIS PLAN IS ACCURATE FOR ELECTRICAL WORK ONLY

SIGNAL AND LIGHTING (TEMPORARY) (STAGE 2A) (LOCATION 1)

SCALE: 1"=20'

E-14

STATE OF CALIFORNIA - DEPARTMENT OF TRANSPORTATION
Caltrans

CONSULTANT FUNCTIONAL SUPERVISOR: KRISTIN CALIA
CALCULATED-DESIGNED BY: JOE ANDERSON
CHECKED BY: KRISTIN CALIA
REVISED BY
DATE REVISED

LAST REVISION 00-00-00
DATE PLOTTED => $DATE
TIME PLOTTED => $TIME

FOR ACCURATE RIGHT OF WAY AND ACCESS DATA, CONTACT
RIGHT OF WAY ENGINEERING AT THE DISTRICT OFFICE.

Dist	COUNTY	ROUTE	POST MILES TOTAL PROJECT	SHEET No.	TOTAL SHEETS
03	But	32	10.3/11.3	103	144

Kristin D. Calia 12-22-11
REGISTERED CIVIL ENGINEER DATE

DECEMBER 22, 2011
PLANS APPROVAL DATE

REGISTERED PROFESSIONAL ENGINEER K. CALIA No. 62461 Exp. 9/30/13 CIVIL STATE OF CALIFORNIA

THE STATE OF CALIFORNIA OR ITS OFFICERS OR AGENTS SHALL NOT BE RESPONSIBLE FOR THE ACCURACY OR COMPLETENESS OF SCANNED COPIES OF THIS PLAN SHEET.

FEHR & PEERS
2990 LAVA RIDGE COURT
ROSEVILLE, CA 95661

CITY OF CHICO
CAPITAL PROJECT SERVICES
411 MAIN STREET
CHICO, CA 95927

STAGE 2A POLE AND EQUIPMENT SCHEDULE

	STANDARD			VEH SIG MTG				PED SIGNAL MOUNTING		PPB		HPS LUM (WATTS)	
No.	TYPE	SMA	LMA	ø	MAST ARM	ø	POLE	ø	MOUNTING	ø	ARROW		SPECIAL REQUIREMENTS
Ⓐ	(TEMP WOOD POLE – 40')	–	(12')	1 1 6 6	(SW-1) (SW-1) (SW-1) (SW-1)	–	–	–	–	–	–	(200)	
Ⓑ	(TEMP WOOD POLE – 40')	–	(12')	3 3 8 8	(SW-1) (SW-1) (SW-1) (SW-1)	–	–	–	–	–	–	(200)	
Ⓒ	(TEMP WOOD POLE – 40')	–	(12')	5 5 2	SW-1 (SW-1) SW-1	6	(SV-1-T)	–	–	–	–	(200)	
Ⓓ	(TEMP WOOD POLE – 40')	–	(12')	7 4 4	(SW-1) (SW-1) (SW-1)	2 7	(SV-2-TA)	–	–	–	–	(200)	
Ⓔ	(ULTIMATE SIGNAL POLE)	–	12'	–	–	–	–	4	(SP-1-T)	4	(←—)	–	USE ULTIMATE PEDESTRIAN SIGNAL AND PUSH BUTTON DURING THIS STAGE.
Ⓕ	(ULTIMATE SIGNAL POLE)	–	–	–	–	–	–	6	(SP-1-T)	6	(—→)	–	USE ULTIMATE PEDESTRIAN SIGNAL AND PUSH BUTTON DURING THIS STAGE.
Ⓖ	(ULTIMATE SIGNAL POLE)	–	12'	–	–	–	–	8	(SP-1-T)	–	–	–	USE ULTIMATE PEDESTRIAN SIGNAL DURING THIS STAGE.
Ⓗ	(ULTIMATE SIGNAL POLE)	–	–	–	–	–	–	–	–	6	(←—)	–	USE ULTIMATE PEDESTRIAN PUSH BUTTON DURING THIS STAGE.
Ⓘ	(ULTIMATE SIGNAL POLE)	–	–	–	–	–	–	6	(SP-1-T)	8	(—→)	–	USE ULTIMATE PEDESTRIAN SIGNAL AND PUSH BUTTON DURING THIS STAGE.
Ⓙ	ULTIMATE SIGNAL POLE	–	15'	–	–	–	–	–	–	8	←—	–	USE ULTIMATE PEDESTRIAN PUSH BUTTON DURING THIS STAGE.
Ⓚ	ULTIMATE SIGNAL POLE	–	–	–	–	–	–	8 2	(TP-2-T)	–	–	–	USE ULTIMATE PEDESTRIAN SIGNALS DURING THIS STAGE.
Ⓛ	ULTIMATE SIGNAL POLE	–	–	–	–	–	–	–	–	2	—→	–	USE ULTIMATE PEDESTRIAN PUSH BUTTON DURING THIS STAGE.
Ⓜ	ULTIMATE SIGNAL POLE	–	12'	–	–	–	–	–	–	2	←—	–	USE ULTIMATE PEDESTRIAN PUSH BUTTON DURING THIS STAGE.
Ⓝ	ULTIMATE SIGNAL POLE	–	–	–	–	–	–	2 4	(TP-2-T)	–	–	–	USE ULTIMATE PEDESTRIAN SIGNALS DURING THIS STAGE.
Ⓞ	ULTIMATE SIGNAL POLE	–	–	–	–	–	–	–	–	4	—→	–	USE ULTIMATE PEDESTRIAN PUSH BUTTON DURING THIS STAGE.

( ) = DENOTES EXISTING

STAGE 2A CONDUCTOR SCHEDULE

AWG	CONDUCTOR DESIGNATION	NUMBER OF CONDUCTORS — RUN NUMBER 1	2	3	4	5	6	7	8	9	10	11	12	13	14	15	16	17	18	19
#14	ø1					(3)		(3)	(3)	(3)										
	ø2				(3)	(3)		(3)	(3)					(3)						
	ø3				(3)	(3)		(3)	(3)											
	ø4					(3)		(3)	(3)	(3)		(3)								
	ø5				(3)	(3)		(3)	(3)					(3)						
	ø6				(3)	(3)		(3)	(3)	(3)										
	ø7					(3)		(3)	(3)	(3)		(3)								
	ø8				(3)	(3)		(3)	(3)											
	ø2P					2		2	2	2	2	2	2		2	2		2	2	
	ø4P					(2)		(2)	(2)	(2)	(2)							2	2	
	ø6P			(2)	(2)	(2)	(2)	(4)	(4)											
	ø8P	(2)	(2)	(2)	(2)	(2)		(2)	(2)	(2)		(2)	(2)		2	2				
	PPB(ø2P)					1		1	1	1	1	1	1		1	1	1	1		
	PPB(ø4P)					(1)		(2)	(2)	(1)	(1)							1	1	1
	PPB(ø6P)		(1)	(1)	(1)	(1)	(1)	(2)	(2)											
	PPB(ø8P)			(1)	(1)	(1)		(1)	(1)	(1)		(1)	(1)		1					
	PPB COMMON		(1)	(1)	(1)	(1)	(1)	(1)	(1)	(1)	(1)	(1)	(1)		1	1	1	1	1	1
	TOTAL #14	(2)	(4)	(7)	(22)	3(34)	(4)	3(38)	3(38)	3(22)	3(4)	(10)	3(4)	(6)	7	6	2	7	6	2
#10	SIGNAL COMMON	(1)	(1)	(1)	(1)	(1)	(1)	(1)	(1)	(1)	(1)	(1)	(1)	(1)	(1)	(1)		(1)	(1)	
#8	LUMINAIRE				(2)	(2)		(2)		(2)	2			(2)				2	2	2
#6	CONTROLLER								(2)											
VIDEO DETECTION	VIDEO CABLE				(2)	(4)		(4)	(4)	(1)				(1)						
	VIDEO POWER				(2)	(4)		(4)	(4)	(1)				(1)						
DETECTOR LOOP CABLE	ø2					(2)		(2)	(2)	(2)	(2)									
	ø3					(1)		(1)	(1)	(1)		(1)	(1)							
	ø4					(1)		(1)	(1)											
	ø6				(2)	(2)		(2)	(2)											
	ø8					(1)		(1)	(1)	(1)		(1)	(1)							
	TOTAL DLC				(2)	(7)		(7)	(7)	(4)	(2)	(2)	(2)							
SIC						(1)		(1)	(1)	(1)	(1)									
	CONDUIT SIZE	(2")	(3")	(2")	–	(2")	(2-3")	(2-4")	(2-4")	–	(2")	–	(2")	–	2"	3"	3"	2"	2-3"	2-3"

( ) = DENOTES EXISTING

THIS PLAN IS ACCURATE FOR ELECTRICAL WORK ONLY

SIGNAL AND LIGHTING (TEMPORARY) (STAGE 2A) (LOCATION 1)

NO SCALE

E-15

STATE OF CALIFORNIA – DEPARTMENT OF TRANSPORTATION
Caltrans

CONSULTANT FUNCTIONAL SUPERVISOR: KRISTIN CALIA
CALCULATED-DESIGNED BY: JOE ANDERSON
CHECKED BY: KRISTIN CALIA
REVISED BY
DATE REVISED

LAST REVISION 00-00-00
DATE PLOTTED => $DATE
TIME PLOTTED => $TIME

Dist	COUNTY	ROUTE	POST MILES TOTAL PROJECT	SHEET No.	TOTAL SHEETS
03	But	32	10.3/11.3	104	144

Kristin D. Calia 12-22-11
REGISTERED CIVIL ENGINEER DATE

DECEMBER 22, 2011
PLANS APPROVAL DATE

REGISTERED PROFESSIONAL ENGINEER
K. CALIA
No. 62461
Exp. 9/30/13
CIVIL
STATE OF CALIFORNIA

THE STATE OF CALIFORNIA OR ITS OFFICERS OR AGENTS SHALL NOT BE RESPONSIBLE FOR THE ACCURACY OR COMPLETENESS OF SCANNED COPIES OF THIS PLAN SHEET.

FEHR & PEERS
2990 LAVA RIDGE COURT
ROSEVILLE, CA 95661

CITY OF CHICO
CAPITAL PROJECT SERVICES
411 MAIN STREET
CHICO, CA 95927

FOR ACCURATE RIGHT OF WAY AND ACCESS DATA, CONTACT RIGHT OF WAY ENGINEERING AT THE DISTRICT OFFICE.

PROJECT NOTES:

24 Exist 2"C, 2 dlc.

26 INSTALL VIDEO CAMERA COAX AND POWER CABLES.

34 OVERHEAD MESSENGER WIRE (1/2 INCH 7-STRAND SPAN WIRE, 20 FT Min VERTICAL CLEARANCE). SEE DETAIL ON SHEET E-17.

35 VIDEO DETECTION ZONE. EXACT SIZE AND LOCATION TO BE DETERMINED BY THE ENGINEER IN THE FIELD.

37 ATTACH OVERHEAD SPAN WIRE TO STEEL POLE. SEE DETAIL ON SHEET E-17.

44 INSTALL TEMPORARY WOOD POLE (40'). SEE DETAILS ON SHEET E-17. RC AFTER FINAL STAGE CONSTRUCTION.

49 INSTALL VIDEO DETECTION CAMERA ON Exist SIGNAL MAST ARM. SEE INSTALLATION DETAIL ON SHEET E-17.

60 2"C, REMOVE Exist dlc FROM AB CONDUIT AND INSTALL IN NEW CONDUIT.

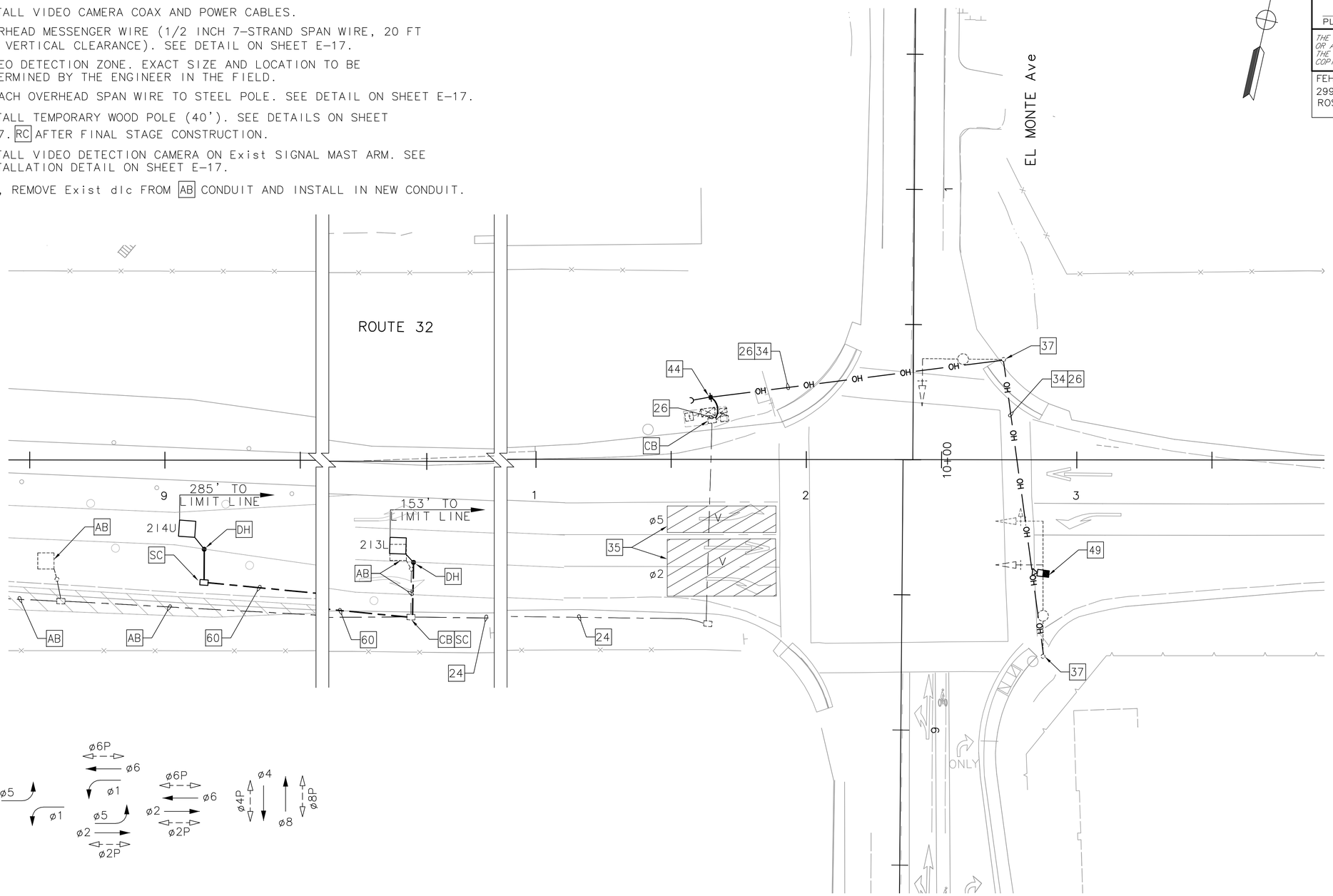

Exist PHASE DIAGRAM

DESIGN SPEED: ROUTE 32 (WB) = 55 MPH
ROUTE 32 (EB) = 45 MPH
EL MONTE Ave = 35 MPH

SIGNAL AND LIGHTING (TEMPORARY) (OVERLAY) (LOCATION 2)

SCALE: 1"=20'

E-16

THIS PLAN IS ACCURATE FOR ELECTRICAL WORK ONLY

STATE OF CALIFORNIA - DEPARTMENT OF TRANSPORTATION
Caltrans

CONSULTANT FUNCTIONAL SUPERVISOR: KRISTIN CALIA
CALCULATED-DESIGNED BY: JOE ANDERSON
CHECKED BY: KRISTIN CALIA
REVISED BY
DATE REVISED

LAST REVISION 00-00-00
DATE PLOTTED => $DATE
TIME PLOTTED => $TIME

FOR ACCURATE RIGHT OF WAY AND ACCESS DATA, CONTACT RIGHT OF WAY ENGINEERING AT THE DISTRICT OFFICE.

Dist	COUNTY	ROUTE	POST MILES TOTAL PROJECT	SHEET No.	TOTAL SHEETS
03	But	32	10.3/11.3	105	144

Kristin D. Calia 12-22-11
REGISTERED CIVIL ENGINEER DATE

DECEMBER 22, 2011
PLANS APPROVAL DATE

REGISTERED PROFESSIONAL ENGINEER K. CALIA No. 62461 Exp. 9/30/13 CIVIL STATE OF CALIFORNIA

THE STATE OF CALIFORNIA OR ITS OFFICERS OR AGENTS SHALL NOT BE RESPONSIBLE FOR THE ACCURACY OR COMPLETENESS OF SCANNED COPIES OF THIS PLAN SHEET.

FEHR & PEERS
2990 LAVA RIDGE COURT
ROSEVILLE, CA 95661

CITY OF CHICO
CAPITAL PROJECT SERVICES
411 MAIN STREET
CHICO, CA 95927

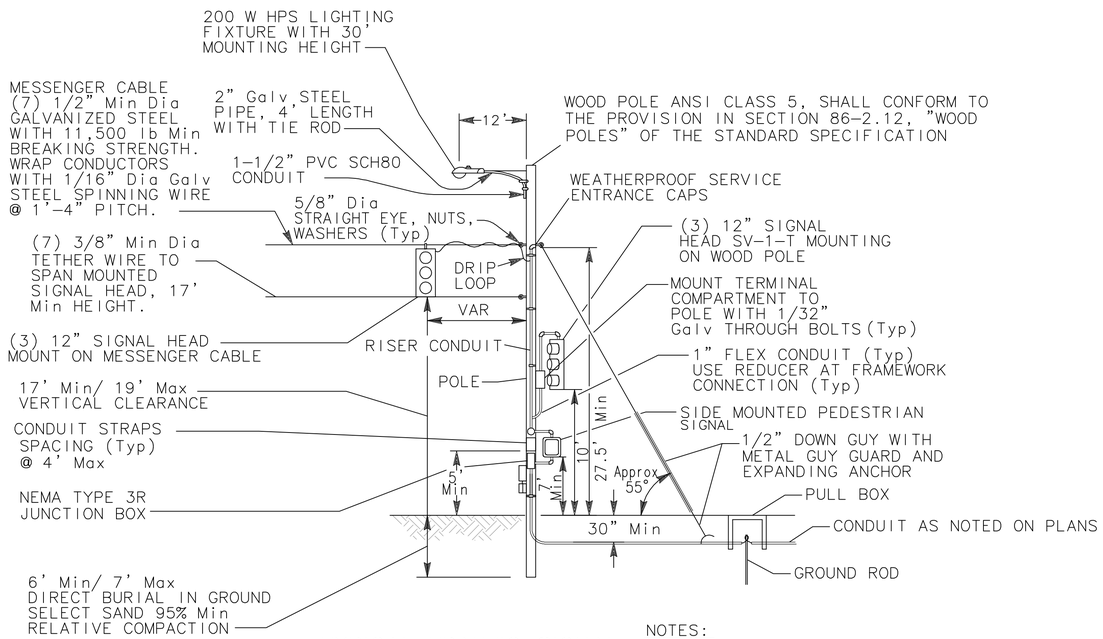

TYPICAL TRAFFIC SIGNAL
TEMPORARY WOOD POLE
INSTALLATION DETAIL

NOTES:
1. ALL METALLIC CONDUIT, BOLTS STRAPS AND MISC. HARDWARE SHALL BE GALVANIZED.
2. BACKPLATE REQUIRED ON ALL SIGNAL FACES.

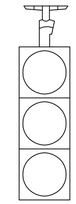

SPAN WIRE MOUNT
1 FACE (SW-1)

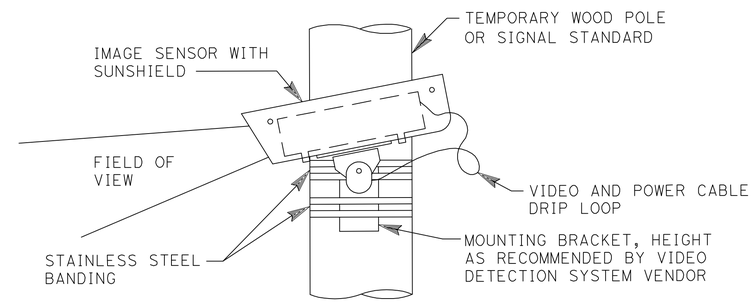

POLE MOUNTED CAMERA ASSEMBLY

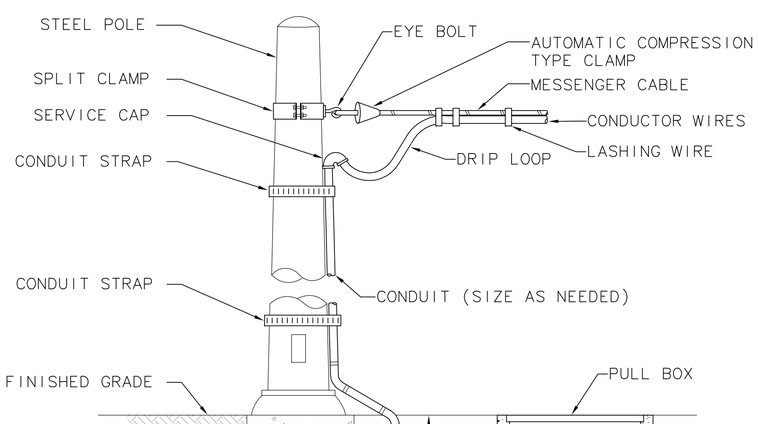

SPAN WIRE INSTALLATION
STEEL POLE

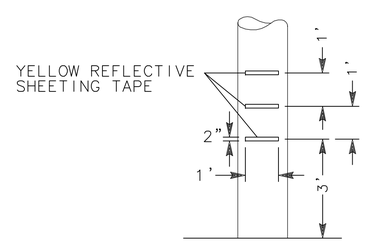

REFLECTIVE MARKING FOR
WOOD POLE

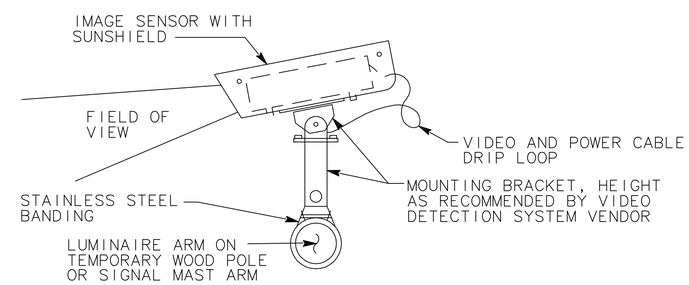

MAST ARM MOUNTED CAMERA ASSEMBLY

VIDEO DETECTION CAMERA ASSEMBLY
INSTALLATION DETAIL

ELECTRICAL DETAILS (TEMPORARY SIGNALS)

NO SCALE

E-17

THIS PLAN IS ACCURATE FOR ELECTRICAL WORK ONLY

STATE OF CALIFORNIA - DEPARTMENT OF TRANSPORTATION
Caltrans
CONSULTANT FUNCTIONAL SUPERVISOR: KRISTIN CALIA
CALCULATED-DESIGNED BY: JOE ANDERSON
CHECKED BY: KRISTIN CALIA
REVISED BY
DATE REVISED

LAST REVISION 00-00-00
DATE PLOTTED => $DATE
TIME PLOTTED => $TIME

Dist	COUNTY	ROUTE	POST MILES TOTAL PROJECT	SHEET No.	TOTAL SHEETS
03	But	32	10.3/11.3	106	144

LICENSED LANDSCAPE ARCHITECT DATE 12-22-11

DECEMBER 22, 2011
PLANS APPROVAL DATE

REGISTERED LANDSCAPE ARCHITECT
BRIAN D. FIRTH #2752
SIGNATURE
EXP. 06-13
DATE
STATE OF CALIFORNIA

THE STATE OF CALIFORNIA OR ITS OFFICERS OR AGENTS SHALL NOT BE RESPONSIBLE FOR THE ACCURACY OR COMPLETENESS OF SCANNED COPIES OF THIS PLAN SHEET.

BRIAN FIRTH LANDSCAPE ARCHITECT, INC.
627 BROADWAY, SUITE 220
CHICO, CALIFORNIA 95928

CITY OF CHICO
CAPITAL PROJECT SERVICES
411 MAIN STREET
CHICO, CA 95927

PLANTING LEGEND

SYMBOL	DESIGNATION	BOTANICAL NAME/COMMON NAME	SIZE	QTY	REMARKS
TREES					
	T-1	QUERCUS WISLIZENII INTERIOR LIVE OAK	15 GAL.	36	SEE DETAIL 1, SHEET LS-1.8
	T-2	QUERCUS LOBATA VALLEY OAK	15 GAL.	52	SEE DETAIL 1, SHEET LS-1.8
	T-3	UMBELLULARIA CALIFORNICA CALIFORNIA LAUREL	15 GAL.	35	MULTI TUNKED, UNSTAKED. SEE DETAIL 1, SHEET LS-1.8
	T-4	ARBUTUS UNEDO STRAWBERRY TREE	15 GAL.	4	MULTI TUNKED, UNSTAKED. SEE DETAIL 1, SHEET LS-1.8
	T-5	PLATANUS RACEMOSA CALIFORNIA SYCAMORE	15 GAL.	0	SEE DETAIL 1, SHEET LS-1.8
SHRUBS					
	S-1	HETEROMELES ARBUTIFOLIA TOYON	5 GAL.	211	SEE DETAIL 2, SHEET LS-1.8
	S-2	ARCTOSTAPHYLOS 'AUSTIN HILL' AUSTIN HILL MANZANITA	5 GAL.	247	SEE DETAIL 2, SHEET LS-1.8
	S-3	PRUNUS ILICIFOLIA 'LYONII' CATALINA ISLAND CHERRY	5 GAL.	142	SEE DETAIL 2, SHEET LS-1.8
	S-4	CERCOCARPUS BETULOIDES MOUNTAIN MAHOGANY	5 GAL.	140	SEE DETAIL 2, SHEET LS-1.8
	S-5	ARCTOSTAPHYLOS BAKERI 'LOUIS EDMUNDS' LOUIS EDMUNDS MANZANITA	5 GAL.	92	SEE DETAIL 2, SHEET LS-1.8
	S-6	RHUS OVATA SUGAR BUSH	5 GAL.	19	SEE DETAIL 2, SHEET LS-1.8
	S-7	RHAMNUS CALIFORNICA COFFEEBERRY	5 GAL.	63	SEE DETAIL 2, SHEET LS-1.8
	S-8	ARCTOSTAPHYLOS DENSIFLORA 'HOWARD MCMINN' HOWARD MCMINN MANZANITA	5 GAL.	180	SEE DETAIL 2, SHEET LS-1.8
	S-9	ARCTOSTAPHYLOS 'JOHN DOURLEY' JOHN DOURLEY MANZANITA	5 GAL.	108	SEE DETAIL 2, SHEET LS-1.8
	S-10	RHAMNUS CALIFORNICA 'EVE CASE' EVE CASE	5 GAL.	129	SEE DETAIL 2, SHEET LS-1.8
	S-11	MAHONIA AQUIFOLIUM OREGON GRAPE	5 GAL.	127	SEE DETAIL 2, SHEET LS-1.8
	S-12	IRIS DOUGLASIANA BEARDED IRIS	1 GAL	240	SEE DETAIL 2, SHEET LS-1.8
	S-13	ROSA CALIFORNICA 'PLENA' WILD ROSE	5 GAL.	27	SEE DETAIL 2, SHEET LS-1.8
	S-14	ROSA X 'NOARE' P.P.# 11308 FLOWER CARPET® RED GROUNDCOVER ROSE	5 GAL.	57	SEE DETAIL 2, SHEET LS-1.8
	S-15	CERCIS OCCIDENTALIS WESTERN REDBUD	5 GAL.	35	SEE DETAIL 2, SHEET LS-1.8
	S-16	GARRYA ELLIPTICA 'JAMES ROOF' COAST SILKTASSEL	5 GAL.	79	SEE DETAIL 2, SHEET LS-1.8
	S-17	ARCTOSTAPHYLOS 'WOOD'S COMPACT' WOOD'S COMPACT MANZANITA GROUNDCOVER	1 GAL.	93	SEE DETAIL 2, SHEET LS-1.8
	S-18	FESTUCA GLAUCA 'ELIJAH BLUE' ELIJAH BLUE FESCUE	1 GAL.	283	PLANT @ 18" O.C.. SEE DETAIL 2, SHEET LS-1.8.
	S-19	SALVIA GREGII 'RED' AUTUMN SAGE	5 GAL.	26	SEE DETAIL 2, SHEET LS-1.8
VINES					
	V-1	PARTHENOCISSUS TRICUSPIDATA 'VETCHII' BOSTON IVY	1 GAL.	402	SEE DETAIL 3, SHEET LS-1.8
	V-2	FICUS PUMILA CLIMBING FIG	1 GAL.	181	SEE DETAIL 3, SHEET LS-1.8
HYDROSEED					
	H-1	NON-IRRIGATED, DRYLAND EROSION CONTROL MIX	HYDROSEED	PER AREA	SEE BOOK FORM SPECIFICATIONS
	H-2	BIOFILTRATION SWALE HYDROSEED AND LINERS	HYDROSEED AND LINERS	PER AREA	SEE BOOK FORM SPECIFICATIONS

SYMBOLS

- 33 / S-18 — PLANT QUANTITY / PLANT TYPE
- EXTENTS OF 3" LAYER WOOD CHIP MULCH
- FLOWLINE OF DITCH. SHOWN FOR REFERENCE ONLY. SEE DRAINAGE PLANS BY OTHERS. DESIGN INTENT IS TO INSTALL TREES AND SHRUBS OUT OF FLOWLINE OF SWALE.

PLAN LEGEND

SYMBOL	DESCRIPTION	REMARKS	DETAIL
1	EDGE OF TRAVELED WAY	SHOWN FOR REFERENCE ONLY.	--
2	SOUNDWALL	SHOWN FOR REFERENCE ONLY. SEE PLANS BY OTHERS	--
3	RIGHT OF WAY	SHOWN FOR REFERENCE ONLY.	--
4	EXISTING TREE, TO REMAIN. TYPICAL.	SHOWN FOR REFERENCE ONLY. SEE PLANS BY OTHERS.	--
5	FLOWLINE OF DITCH	SHOWN FOR REFERENCE ONLY. SEE PLANS BY OTHERS. SEE PLANTING NOTE 4, THIS SHEET.	--
6	CALTRANS CLEAR RECOVERY ZONE-17' FROM TRAVELED WAY FOR ALL EXISTING PLANTINGS TO REMAIN.	SHOWN FOR REFERENCE ONLY. SEE PLANS BY OTHERS	--
7	SIDEWALK	SHOWN FOR REFERENCE ONLY. SEE PLANS BY OTHERS	--
8	DRAINAGE STRUCTURE	SHOWN FOR REFERENCE ONLY. SEE PLANS BY OTHERS.	--
9	EXISTING SIGNS. TYPICAL.	SEE DETAILS FOR ADDITIONAL INFORMATION	--
10	UPPER RAISED PLANTER	SEE DETAILS: 4 & 5/ LS-1.8 , 1 & 2/ LS-1.9, AND 1 & 2/ LS-1.10 FOR ADDITIONAL INFORMATION	--
11	LOWER RAISED PLANTER	SEE DETAILS: 4 & 5/ LS-1.8 , 1 & 2/ LS-1.9, AND 1 & 2/ LS-1.10 FOR ADDITIONAL INFORMATION	--
12	BIO-SWALE (NOT INSTALLED IN PHASE 1)	SHOWN FOR REFERENCE ONLY. SEE PLANS BY OTHERS	--
13	BIOFILTRATION SWALE	SHOWN FOR REFERENCE ONLY. SEE PLANS BY OTHERS	--
14	CALTRANS CLEAR RECOVERY ZONE	30' FROM TRAVELED WAY FOR ALL NEW PLANTINGS GREATER THAN 4" DBH. SHOWN FOR REFERENCE ONLY. SEE PLANS BY OTHERS	--
15	IMPORT TOPSOIL AND PLACEMENT	SEE SHEET X-8 FOR SECTION. SEE LANDSCAPE PLANTING SPECIAL PROVISIONS FOR ADDITIONAL INFORMATION.	--
16	ROOT BARRIER, TYPICAL.	DEEP ROOT MODEL: LB-12 OR APPROVED EQUAL. TYPICAL FOR ALL TREES WITHIN 4' OR LESS OF HARDSCAPE	--

TREE MITIGATION SUMMARY

INFORMATION PROVIDED IS FOR PHASE 1 OF THIS PROJECT-EAST SIDE OF FIR STREET TO WEST SIDE OF EL MONTE AND FROM STATION NUMBER 110+200.

TOTAL DIAMETER AT BREAST HEIGHT (DBH) TO MITIGATE (PER EIR FOR PRE-CAST SOUNDWALL RATES): 1,825 INCHES

MITIGATION RATE: 1, 15 GALLON SIZED TREE PER EVERY 6 INCHES OF DBH TO BE MITIGATED

TOTAL QUANTITY OF MITIGATION TREES REQUIRED: 305

PHASE 1

MITIGATION TREES (BY SPECIES)

CONTAINER SIZE	SPECIES	QUANTITY
15 GALLON	QUERCUS WISLIZENII	36
15 GALLON	QUERCUS LOBATA	52
15 GALLON	UMBELLULARIA CALIFORNICA	35
15 GALLON	ARBUTUS UNEDO	4
5 GALLON	HETEROMELES ARBUTIFOLIA	211
TOTAL QUANTITY OF MITIGATION TREES PROVIDED		338

PLANTING NOTES

1. INSTALL A 3" MINIMUM LAYER WOOD CHIPS AT ALL IRRIGATED LANDSCAPE AREAS. SEE PLANTING LEGEND, SYMBOLS FOR EXTENTS
2. SEE PLANS BY MARK THOMAS & COMPANY FOR ADDITIONAL INFORMATION.
3. REFER TO BOOK FORM SPECIFICATIONS FOR ADDITIONAL INFORMATION
4. TREES AND SHRUBS TO BE PLANTED WITH A 2'-0" MIN.IMUM SETBACK FROM CENTERLINE OF DITCH (EXCEPT AT MEDIAN- TREES AND SINGLE ROW SHRUBS SHALL BE CENTERED IN MEDIAN).
5. SEE SPECIAL PROVISIONS FOR MONITORING AND MAINTENANCE.

WATER EFFICIENT LANDSCAPE ORDINANCE

1. VINES (BOSTON IVY AND CREEPING FIG) ARE MEDIUM WATER USE PLANTS. ALL OTHER IRRIGATED LANDSCAPE AREA IS COMPRISED OF LOW WATER USE PLANT MATERIAL.
2. ALL IRRIGATED LANDSCAPE AREAS SHALL BE MULCHED WITH A 3" MINIMUM THICK LAYER OF WOOD CHIPS SEE PLANTING LEGEND, SYMBOLS FOR EXTENTS.
3. LAND IMAGE HAS COMPLIED WITH THE CRITERIA OF THE WATER EFFICIENT LANDSCAPE ORDINANCE AND APPLIED THEM FOR THE EFFICIENT USE OF WATER IN THE PLANTING DESIGN.

HIGHWAY 32-PHASE 1
LANDSCAPE CONSTRUCTION AND PLANTING PLAN
SHEET LS-1.0

NORTH

0 30 60

SCALE: 1" = 30'-0"

REVISED BY	
DATE REVISED	
CALCULATED-DESIGNED BY	B. FIRTH/ JBB
CHECKED BY	B. FIRTH
CONSULTANT FUNCTIONAL SUPERVISOR	BRIAN FIRTH

STATE OF CALIFORNIA — DEPARTMENT OF TRANSPORTATION

Caltrans®

LAST REVISION 00-00-00 DATE PLOTTED => $DATE TIME PLOTTED => $TIME

Dist	COUNTY	ROUTE	POST MILES TOTAL PROJECT	SHEET No.	TOTAL SHEETS
03	But	32	10.3/11.3	107	144

12-22-11
LICENSED LANDSCAPE ARCHITECT DATE

DECEMBER 22, 2011
PLANS APPROVAL DATE

REGISTERED LANDSCAPE ARCHITECT
BRIAN D. FIRTH #2752
SIGNATURE
EXP. 06-13
DATE
STATE OF CALIFORNIA

THE STATE OF CALIFORNIA OR ITS OFFICERS OR AGENTS SHALL NOT BE RESPONSIBLE FOR THE ACCURACY OR COMPLETENESS OF SCANNED COPIES OF THIS PLAN SHEET.

BRIAN FIRTH LANDSCAPE ARCHITECT, INC.
627 BROADWAY, SUITE 220
CHICO, CALIFORNIA 95928

CITY OF CHICO
CAPITAL PROJECT SERVICES
411 MAIN STREET
CHICO, CA 95927

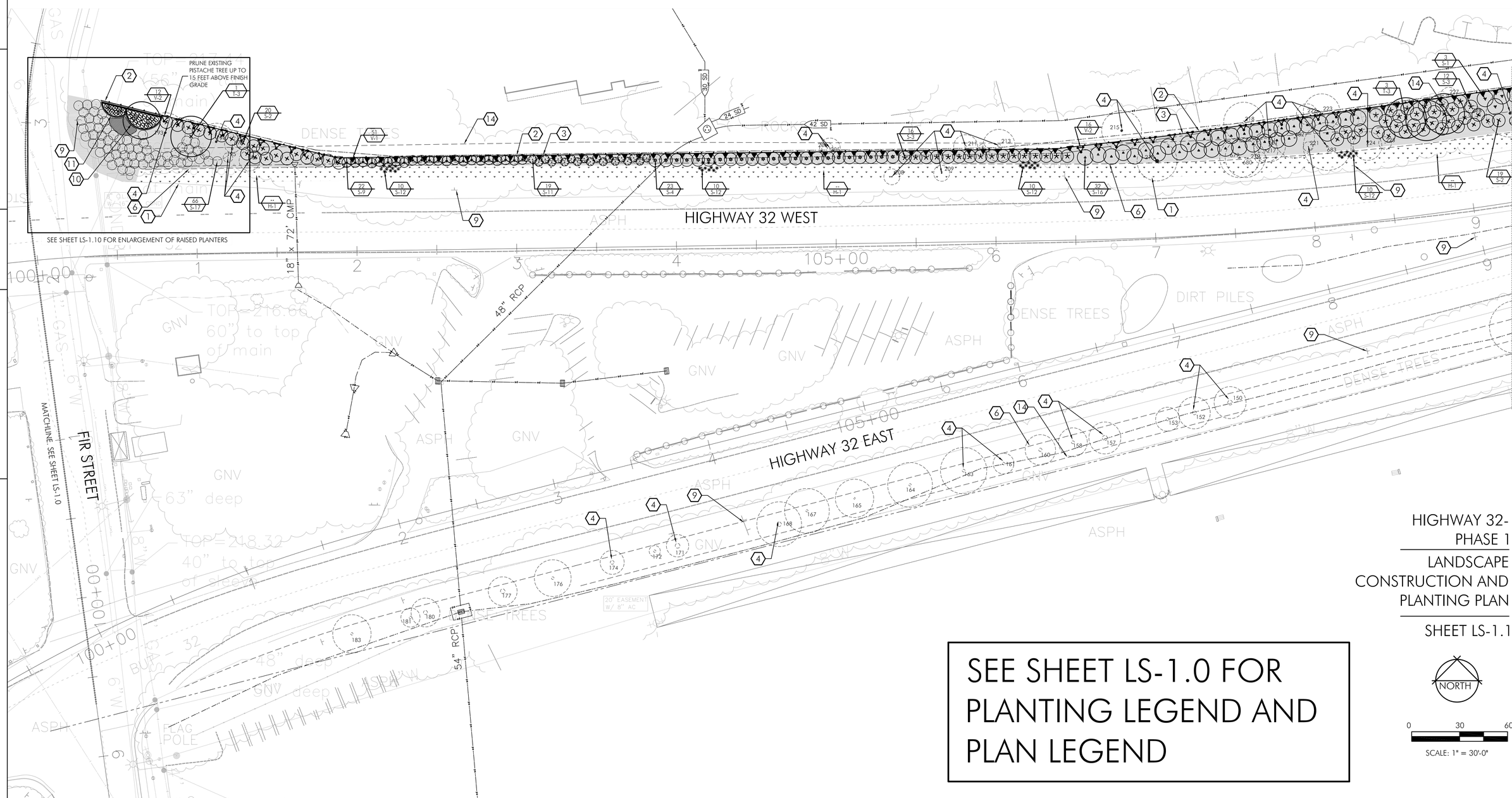

SEE SHEET LS-1.0 FOR PLANTING LEGEND AND PLAN LEGEND

HIGHWAY 32-
PHASE 1

LANDSCAPE
CONSTRUCTION AND
PLANTING PLAN

SHEET LS-1.1

NORTH

0 30 60
SCALE: 1" = 30'-0"

STATE OF CALIFORNIA – DEPARTMENT OF TRANSPORTATION
Caltrans

CONSULTANT FUNCTIONAL SUPERVISOR: BRIAN FIRTH

CALCULATED-DESIGNED BY: B. FIRTH/ JBB
CHECKED BY: B. FIRTH

REVISED BY
DATE REVISED

AST REVISION 00-00-00
DATE PLOTTED => $DATE
TIME PLOTTED => $TIME

Dist	COUNTY	ROUTE	POST MILES TOTAL PROJECT	SHEET No.	TOTAL SHEETS
03	But	32	10.3/11.3	108	144

12-22-11
LICENSED LANDSCAPE ARCHITECT DATE

DECEMBER 22, 2011
PLANS APPROVAL DATE

REGISTERED LANDSCAPE ARCHITECT
BRIAN D. FIRTH #2752
EXP. 06-13
STATE OF CALIFORNIA

THE STATE OF CALIFORNIA OR ITS OFFICERS OR AGENTS SHALL NOT BE RESPONSIBLE FOR THE ACCURACY OR COMPLETENESS OF SCANNED COPIES OF THIS PLAN SHEET.

BRIAN FIRTH LANDSCAPE ARCHITECT, INC.
627 BROADWAY, SUITE 220
CHICO, CALIFORNIA 95928

CITY OF CHICO
CAPITAL PROJECT SERVICES
411 MAIN STREET
CHICO, CA 95927

PLAN LEGEND

SYMBOL	DESCRIPTION	REMARKS	DETAIL
1	EDGE OF TRAVELED WAY	SHOWN FOR REFERENCE ONLY.	--
2	SOUNDWALL	SHOWN FOR REFERENCE ONLY. SEE PLANS BY OTHERS	--
3	RIGHT OF WAY	SHOWN FOR REFERENCE ONLY.	--
4	EXISTING TREE, TO REMAIN. TYPICAL.	SHOWN FOR REFERENCE ONLY. SEE PLANS BY OTHERS.	--
5	FLOWLINE OF DITCH	SHOWN FOR REFERENCE ONLY. SEE PLANS BY OTHERS. SEE PLANTING NOTE 4, THIS SHEET.	--
6	CALTRANS CLEAR RECOVERY ZONE-17' FROM TRAVELED WAY FOR ALL EXISTING PLANTINGS TO REMAIN.	SHOWN FOR REFERENCE ONLY. SEE PLANS BY OTHERS	--
7	SIDEWALK	SHOWN FOR REFERENCE ONLY. SEE PLANS BY OTHERS	--
8	DRAINAGE STRUCTURE	SHOWN FOR REFERENCE ONLY. SEE PLANS BY OTHERS.	--
9	EXISTING SIGNS. TYPICAL.	SEE DETAILS FOR ADDITIONAL INFORMATION	--
10	UPPER RAISED PLANTER	SEE DETAILS: 4 & 5/ LS-1.8 , 1 & 2/ LS-1.9, AND 1 & 2/ LS-1.10 FOR ADDITIONAL INFORMATION	--
11	LOWER RAISED PLANTER	SEE DETAILS: 4 & 5/ LS-1.8 , 1 & 2/ LS-1.9, AND 1 & 2/ LS-1.10 FOR ADDITIONAL INFORMATION	--
12	BIO-SWALE (NOT INSTALLED IN PHASE 1)	SHOWN FOR REFERENCE ONLY. SEE PLANS BY OTHERS	--
13	BIOFILTRATION SWALE	SHOWN FOR REFERENCE ONLY. SEE PLANS BY OTHERS	--
14	CALTRANS CLEAR RECOVERY ZONE	30' FROM TRAVELED WAY FOR ALL NEW PLANTINGS GREATER THAN 4" DBH. SHOWN FOR REFERENCE ONLY. SEE PLANS BY OTHERS	--
15	IMPORT TOPSOIL AND PLACEMENT	SEE SHEET X-8 FOR SECTION. SEE LANDSCAPE PLANTING SPECIAL PROVISIONS FOR ADDITIONAL INFORMATION.	--
16	ROOT BARRIER, TYPICAL.	DEEP ROOT MODEL: LB-12 OR APPROVED EQUAL. TYPICAL FOR ALL TREES WITHIN 4' OR LESS OF HARDSCAPE	--

SEE SHEET LS-1.0 FOR PLANTING LEGEND

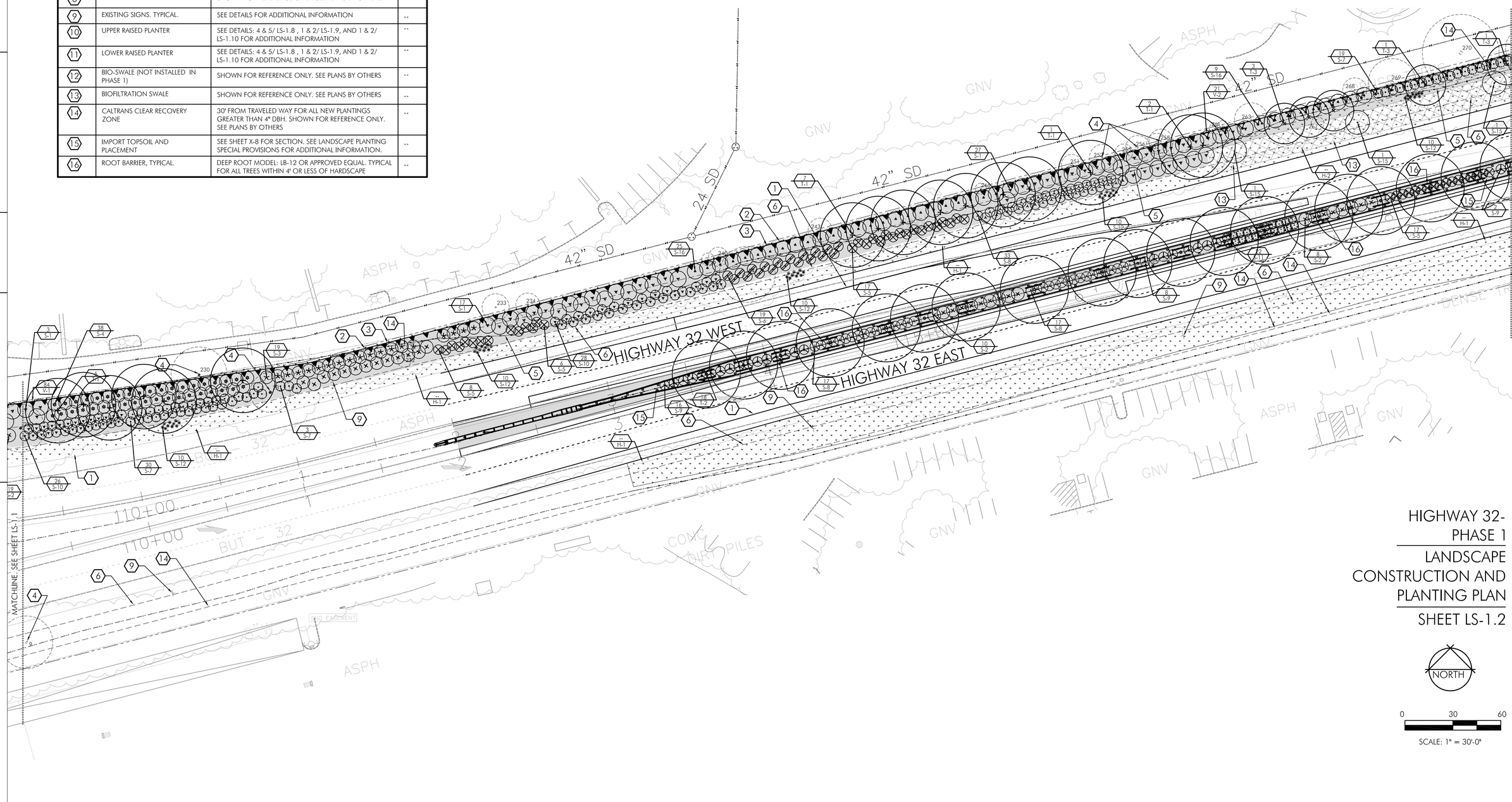

HIGHWAY 32-
PHASE 1
LANDSCAPE
CONSTRUCTION AND
PLANTING PLAN
SHEET LS-1.2

STATE OF CALIFORNIA – DEPARTMENT OF TRANSPORTATION
Caltrans
CONSULTANT FUNCTIONAL SUPERVISOR: BRIAN FIRTH
CALCULATED-DESIGNED BY: B. FIRTH/ JBB
CHECKED BY: B. FIRTH
REVISED BY
DATE REVISED

LAST REVISION 00-00-00
DATE PLOTTED => $DATE
TIME PLOTTED => $TIME

Dist	COUNTY	ROUTE	POST MILES TOTAL PROJECT	SHEET No.	TOTAL SHEETS
03	But	32	10.3/11.3	109	144

12-22-11
LICENSED LANDSCAPE ARCHITECT DATE

DECEMBER 22, 2011
PLANS APPROVAL DATE

REGISTERED LANDSCAPE ARCHITECT BRIAN D. FIRTH #2752 EXP. 06-13 STATE OF CALIFORNIA

THE STATE OF CALIFORNIA OR ITS OFFICERS OR AGENTS SHALL NOT BE RESPONSIBLE FOR THE ACCURACY OR COMPLETENESS OF SCANNED COPIES OF THIS PLAN SHEET.

BRIAN FIRTH LANDSCAPE ARCHITECT, INC.
627 BROADWAY, SUITE 220
CHICO, CALIFORNIA 95928

CITY OF CHICO
CAPITAL PROJECT SERVICES
411 MAIN STREET
CHICO, CA 95927

PLAN LEGEND

SYMBOL	DESCRIPTION	REMARKS	DETAIL
1	EDGE OF TRAVELED WAY	SHOWN FOR REFERENCE ONLY.	--
2	SOUNDWALL	SHOWN FOR REFERENCE ONLY. SEE PLANS BY OTHERS	--
3	RIGHT OF WAY	SHOWN FOR REFERENCE ONLY.	--
4	EXISTING TREE, TO REMAIN. TYPICAL.	SHOWN FOR REFERENCE ONLY. SEE PLANS BY OTHERS.	--
5	FLOWLINE OF DITCH	SHOWN FOR REFERENCE ONLY. SEE PLANS BY OTHERS. SEE PLANTING NOTE 4, THIS SHEET.	--
6	CALTRANS CLEAR RECOVERY ZONE-17' FROM TRAVELED WAY FOR ALL EXISTING PLANTINGS TO REMAIN.	SHOWN FOR REFERENCE ONLY. SEE PLANS BY OTHERS	--
7	SIDEWALK	SHOWN FOR REFERENCE ONLY. SEE PLANS BY OTHERS	--
8	DRAINAGE STRUCTURE	SHOWN FOR REFERENCE ONLY. SEE PLANS BY OTHERS.	--
9	EXISTING SIGNS. TYPICAL.	SEE DETAILS FOR ADDITIONAL INFORMATION	--
10	UPPER RAISED PLANTER	SEE DETAILS: 4 & 5/ LS-1.8 , 1 & 2/ LS-1.9, AND 1 & 2/ LS-1.10 FOR ADDITIONAL INFORMATION	--
11	LOWER RAISED PLANTER	SEE DETAILS: 4 & 5/ LS-1.8 , 1 & 2/ LS-1.9, AND 1 & 2/ LS-1.10 FOR ADDITIONAL INFORMATION	--
12	BIO-SWALE (NOT INSTALLED IN PHASE 1)	SHOWN FOR REFERENCE ONLY. SEE PLANS BY OTHERS	--
13	BIOFILTRATION SWALE	SHOWN FOR REFERENCE ONLY. SEE PLANS BY OTHERS	--
14	CALTRANS CLEAR RECOVERY ZONE	30' FROM TRAVELED WAY FOR ALL NEW PLANTINGS GREATER THAN 4" DBH. SHOWN FOR REFERENCE ONLY. SEE PLANS BY OTHERS	--
15	IMPORT TOPSOIL AND PLACEMENT	SEE SHEET X-8 FOR SECTION. SEE LANDSCAPE PLANTING SPECIAL PROVISIONS FOR ADDITIONAL INFORMATION.	--
16	ROOT BARRIER, TYPICAL.	DEEP ROOT MODEL: LB-12 OR APPROVED EQUAL. TYPICAL FOR ALL TREES WITHIN 4' OR LESS OF HARDSCAPE	--

SEE SHEET LS-1.0 FOR PLANTING LEGEND

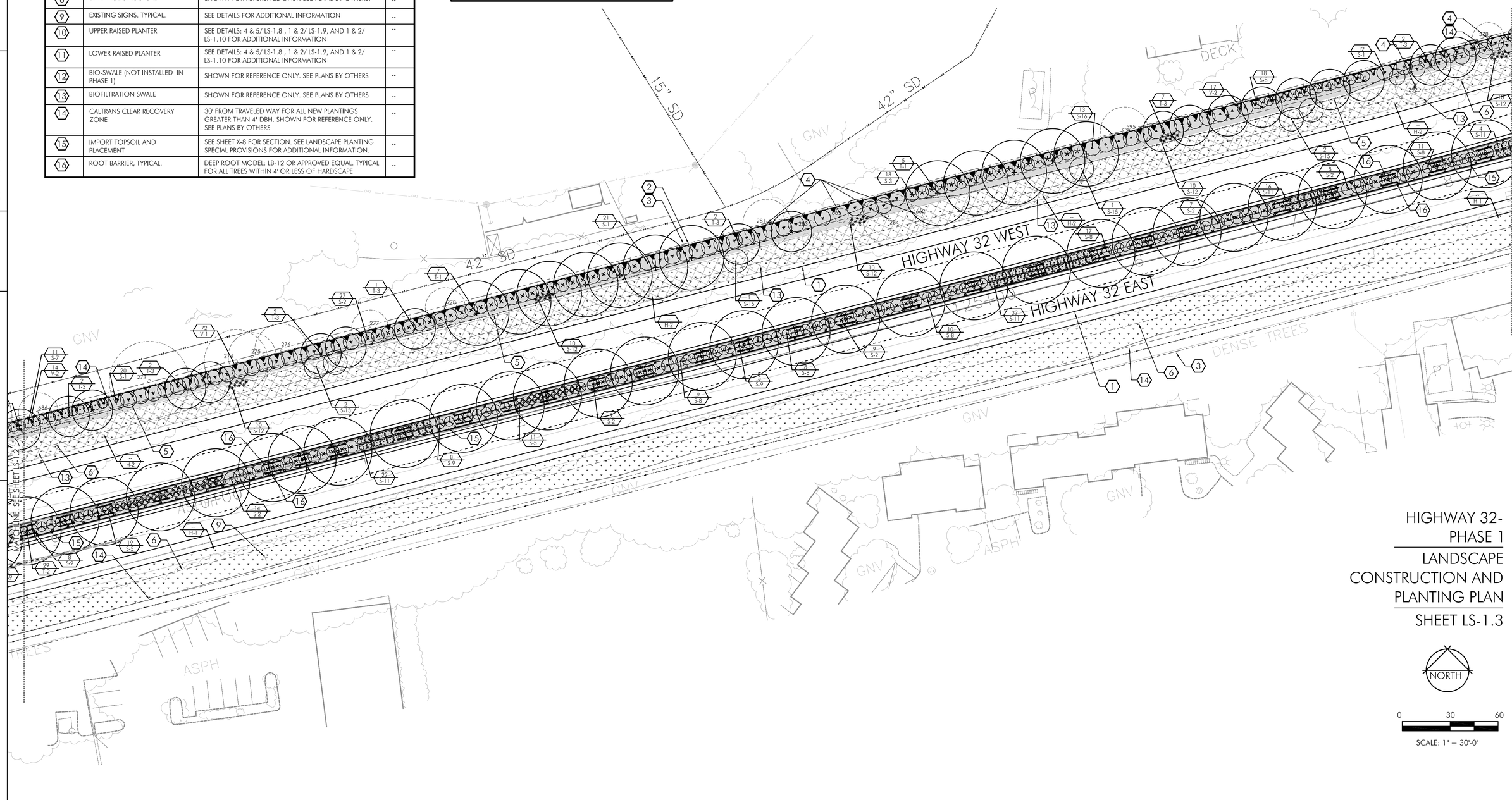

HIGHWAY 32-
PHASE 1
LANDSCAPE
CONSTRUCTION AND
PLANTING PLAN
SHEET LS-1.3

NORTH

0 30 60
SCALE: 1" = 30'-0"

REVISED BY	DATE REVISED
B. FIRTH/ JBB	

CALCULATED-DESIGNED BY	CHECKED BY
B. FIRTH	

SUPERVISOR
BRIAN FIRTH

CONSULTANT FUNCTIONAL SUPERVISOR

STATE OF CALIFORNIA – DEPARTMENT OF TRANSPORTATION
Caltrans

LAST REVISION 00-00-00
DATE PLOTTED => $DATE
TIME PLOTTED => $TIME

Dist	COUNTY	ROUTE	POST MILES TOTAL PROJECT	SHEET No.	TOTAL SHEETS
03	But	32	10.3/11.3	110	144

12-22-11
LICENSED LANDSCAPE ARCHITECT DATE

DECEMBER 22, 2011
PLANS APPROVAL DATE

REGISTERED LANDSCAPE ARCHITECT BRIAN D. FIRTH #2752 STATE OF CALIFORNIA EXP. 06-13

THE STATE OF CALIFORNIA OR ITS OFFICERS OR AGENTS SHALL NOT BE RESPONSIBLE FOR THE ACCURACY OR COMPLETENESS OF SCANNED COPIES OF THIS PLAN SHEET.

BRIAN FIRTH LANDSCAPE ARCHITECT, INC.
627 BROADWAY, SUITE 220
CHICO, CALIFORNIA 95928

CITY OF CHICO
CAPITAL PROJECT SERVICES
411 MAIN STREET
CHICO, CA 95927

PLAN LEGEND

SYMBOL	DESCRIPTION	REMARKS	DETAIL
1	EDGE OF TRAVELED WAY	SHOWN FOR REFERENCE ONLY.	--
2	SOUNDWALL	SHOWN FOR REFERENCE ONLY. SEE PLANS BY OTHERS	--
3	RIGHT OF WAY	SHOWN FOR REFERENCE ONLY.	--
4	EXISTING TREE, TO REMAIN. TYPICAL.	SHOWN FOR REFERENCE ONLY. SEE PLANS BY OTHERS.	--
5	FLOWLINE OF DITCH	SHOWN FOR REFERENCE ONLY. SEE PLANS BY OTHERS. SEE PLANTING NOTE 4, THIS SHEET.	--
6	CALTRANS CLEAR RECOVERY ZONE-17' FROM TRAVELED WAY FOR ALL EXISTING PLANTINGS TO REMAIN.	SHOWN FOR REFERENCE ONLY. SEE PLANS BY OTHERS	--
7	SIDEWALK	SHOWN FOR REFERENCE ONLY. SEE PLANS BY OTHERS	--
8	DRAINAGE STRUCTURE	SHOWN FOR REFERENCE ONLY. SEE PLANS BY OTHERS.	--
9	EXISTING SIGNS. TYPICAL.	SEE DETAILS FOR ADDITIONAL INFORMATION	--
10	UPPER RAISED PLANTER	SEE DETAILS: 4 & 5/ LS-1.8 , 1 & 2/ LS-1.9, AND 1 & 2/ LS-1.10 FOR ADDITIONAL INFORMATION	--
11	LOWER RAISED PLANTER	SEE DETAILS: 4 & 5/ LS-1.8 , 1 & 2/ LS-1.9, AND 1 & 2/ LS-1.10 FOR ADDITIONAL INFORMATION	--
12	BIO-SWALE (NOT INSTALLED IN PHASE 1)	SHOWN FOR REFERENCE ONLY. SEE PLANS BY OTHERS	--
13	BIOFILTRATION SWALE	SHOWN FOR REFERENCE ONLY. SEE PLANS BY OTHERS	--
14	CALTRANS CLEAR RECOVERY ZONE	30' FROM TRAVELED WAY FOR ALL NEW PLANTINGS GREATER THAN 4" DBH. SHOWN FOR REFERENCE ONLY. SEE PLANS BY OTHERS	--
15	IMPORT TOPSOIL AND PLACEMENT	SEE SHEET X-8 FOR SECTION. SEE LANDSCAPE PLANTING SPECIAL PROVISIONS FOR ADDITIONAL INFORMATION.	--
16	ROOT BARRIER, TYPICAL.	DEEP ROOT MODEL: LB-12 OR APPROVED EQUAL. TYPICAL FOR ALL TREES WITHIN 4' OR LESS OF HARDSCAPE	--

SEE SHEET LS-1.0 FOR PLANTING LEGEND

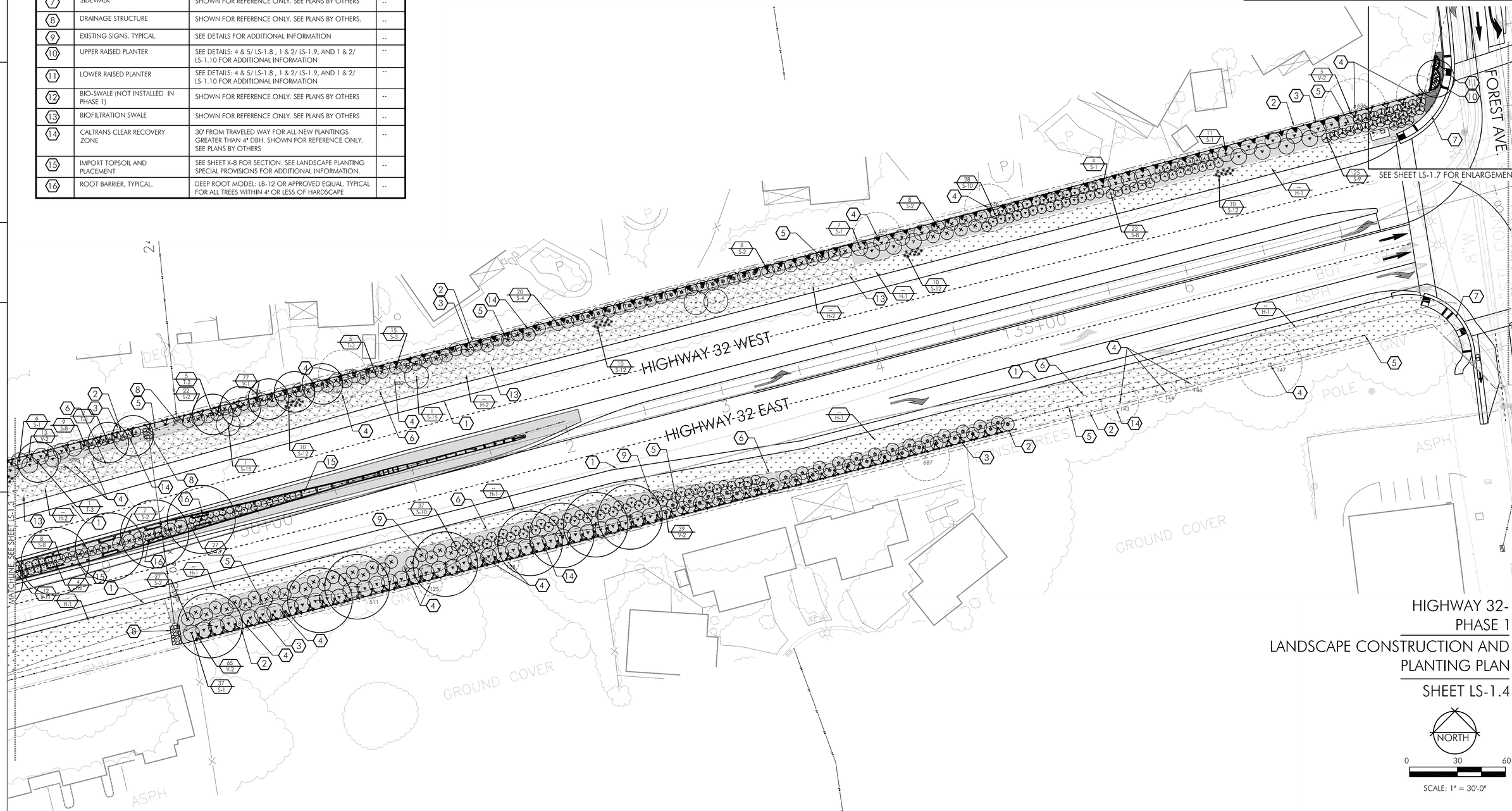

HIGHWAY 32-
PHASE 1
LANDSCAPE CONSTRUCTION AND PLANTING PLAN
SHEET LS-1.4

NORTH
0 30 60
SCALE: 1" = 30'-0"

LAST REVISION 00-00-00 DATE PLOTTED => $DATE TIME PLOTTED => $TIME

STATE OF CALIFORNIA – DEPARTMENT OF TRANSPORTATION
Caltrans®
CONSULTANT FUNCTIONAL SUPERVISOR: BRIAN FIRTH
CALCULATED-DESIGNED BY: B. FIRTH/ JBB
CHECKED BY: B. FIRTH
REVISED BY
DATE REVISED

Dist	COUNTY	ROUTE	POST MILES TOTAL PROJECT	SHEET No.	TOTAL SHEETS
03	But	32	10.3/11.3	111	144

12-22-11
LICENSED LANDSCAPE ARCHITECT DATE

DECEMBER 22, 2011
PLANS APPROVAL DATE

REGISTERED LANDSCAPE ARCHITECT
BRIAN D. FIRTH #2752
EXP. 06-13
STATE OF CALIFORNIA

THE STATE OF CALIFORNIA OR ITS OFFICERS OR AGENTS SHALL NOT BE RESPONSIBLE FOR THE ACCURACY OR COMPLETENESS OF SCANNED COPIES OF THIS PLAN SHEET.

BRIAN FIRTH LANDSCAPE ARCHITECT, INC.
627 BROADWAY, SUITE 220
CHICO, CALIFORNIA 95928

CITY OF CHICO
CAPITAL PROJECT SERVICES
411 MAIN STREET
CHICO, CA 95927

PLAN LEGEND

SYMBOL	DESCRIPTION	REMARKS	DETAIL
1	EDGE OF TRAVELED WAY	SHOWN FOR REFERENCE ONLY.	--
2	SOUNDWALL	SHOWN FOR REFERENCE ONLY. SEE PLANS BY OTHERS	--
3	RIGHT OF WAY	SHOWN FOR REFERENCE ONLY.	--
4	EXISTING TREE, TO REMAIN. TYPICAL.	SHOWN FOR REFERENCE ONLY. SEE PLANS BY OTHERS.	--
5	FLOWLINE OF DITCH	SHOWN FOR REFERENCE ONLY. SEE PLANS BY OTHERS. SEE PLANTING NOTE 4, THIS SHEET.	--
6	CALTRANS CLEAR RECOVERY ZONE-17' FROM TRAVELED WAY FOR ALL EXISTING PLANTINGS TO REMAIN.	SHOWN FOR REFERENCE ONLY. SEE PLANS BY OTHERS	--
7	SIDEWALK	SHOWN FOR REFERENCE ONLY. SEE PLANS BY OTHERS	--
8	DRAINAGE STRUCTURE	SHOWN FOR REFERENCE ONLY. SEE PLANS BY OTHERS.	--
9	EXISTING SIGNS. TYPICAL.	SEE DETAILS FOR ADDITIONAL INFORMATION	--
10	UPPER RAISED PLANTER	SEE DETAILS: 4 & 5/ LS-1.8 , 1 & 2/ LS-1.9, AND 1 & 2/ LS-1.10 FOR ADDITIONAL INFORMATION	--
11	LOWER RAISED PLANTER	SEE DETAILS: 4 & 5/ LS-1.8 , 1 & 2/ LS-1.9, AND 1 & 2/ LS-1.10 FOR ADDITIONAL INFORMATION	--
12	BIO-SWALE (NOT INSTALLED IN PHASE 1)	SHOWN FOR REFERENCE ONLY. SEE PLANS BY OTHERS	--
13	BIOFILTRATION SWALE	SHOWN FOR REFERENCE ONLY. SEE PLANS BY OTHERS	--
14	CALTRANS CLEAR RECOVERY ZONE	30' FROM TRAVELED WAY FOR ALL NEW PLANTINGS GREATER THAN 4" DBH. SHOWN FOR REFERENCE ONLY. SEE PLANS BY OTHERS	--
15	IMPORT TOPSOIL AND PLACEMENT	SEE SHEET X-8 FOR SECTION. SEE LANDSCAPE PLANTING SPECIAL PROVISIONS FOR ADDITIONAL INFORMATION.	--
16	ROOT BARRIER, TYPICAL.	DEEP ROOT MODEL: LB-12 OR APPROVED EQUAL. TYPICAL FOR ALL TREES WITHIN 4' OR LESS OF HARDSCAPE	--

SEE SHEET LS-1.0 FOR PLANTING LEGEND

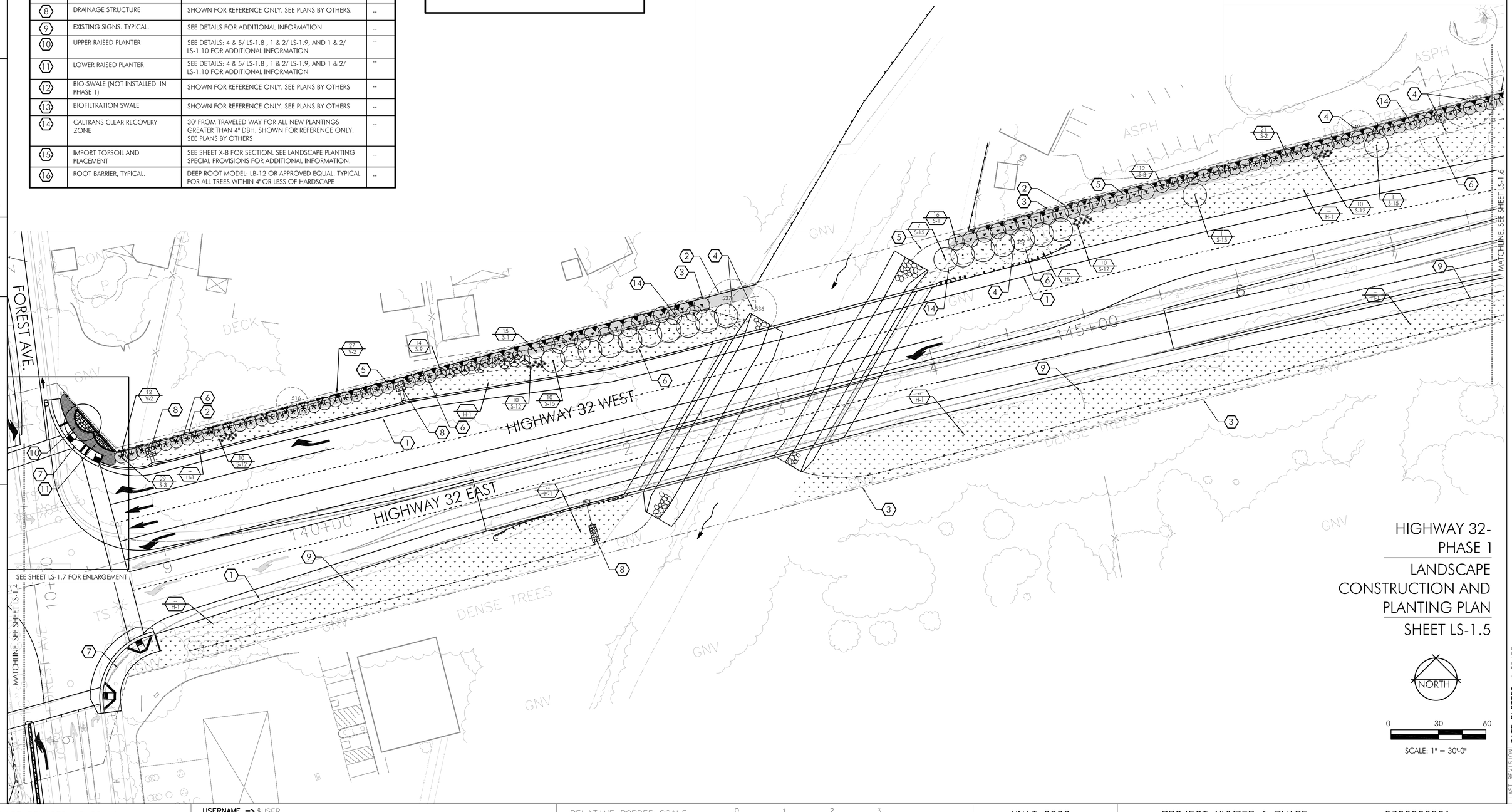

HIGHWAY 32-PHASE 1
LANDSCAPE CONSTRUCTION AND PLANTING PLAN
SHEET LS-1.5

NORTH

0 30 60
SCALE: 1" = 30'-0"

STATE OF CALIFORNIA – DEPARTMENT OF TRANSPORTATION
Caltrans
CONSULTANT FUNCTIONAL SUPERVISOR: BRIAN FIRTH
CALCULATED-DESIGNED BY: B. FIRTH/ JBB
CHECKED BY: B. FIRTH
REVISED BY
DATE REVISED

AST REVISION 00-00-00
DATE PLOTTED => $DATE
TIME PLOTTED => $TIME

Dist	COUNTY	ROUTE	POST MILES TOTAL PROJECT	SHEET No.	TOTAL SHEETS
03	But	32	10.3/11.3	112	144

12-22-11
LICENSED LANDSCAPE ARCHITECT DATE

DECEMBER 22, 2011
PLANS APPROVAL DATE

REGISTERED LANDSCAPE ARCHITECT
BRIAN D. FIRTH #2752
EXP. 06-13
STATE OF CALIFORNIA

THE STATE OF CALIFORNIA OR ITS OFFICERS

BRIAN FIRTH LANDSCAPE ARCHITECT, INC.
627 BROADWAY, SUITE 220
CHICO, CALIFORNIA 95928

CITY OF CHICO
CAPITAL PROJECT SERVICES
411 MAIN STREET
CHICO, CA 95927

PLAN LEGEND

SYMBOL	DESCRIPTION	REMARKS	DETAIL
1	EDGE OF TRAVELED WAY	SHOWN FOR REFERENCE ONLY.	--
2	SOUNDWALL	SHOWN FOR REFERENCE ONLY. SEE PLANS BY OTHERS	--
3	RIGHT OF WAY	SHOWN FOR REFERENCE ONLY.	--
4	EXISTING TREE, TO REMAIN. TYPICAL.	SHOWN FOR REFERENCE ONLY. SEE PLANS BY OTHERS.	--
5	FLOWLINE OF DITCH	SHOWN FOR REFERENCE ONLY. SEE PLANS BY OTHERS. SEE PLANTING NOTE 4, THIS SHEET.	--
6	CALTRANS CLEAR RECOVERY ZONE-17' FROM TRAVELED WAY FOR ALL EXISTING PLANTINGS TO REMAIN.	SHOWN FOR REFERENCE ONLY. SEE PLANS BY OTHERS	--
7	SIDEWALK	SHOWN FOR REFERENCE ONLY. SEE PLANS BY OTHERS	--
8	DRAINAGE STRUCTURE	SHOWN FOR REFERENCE ONLY. SEE PLANS BY OTHERS.	--
9	EXISTING SIGNS. TYPICAL.	SEE DETAILS FOR ADDITIONAL INFORMATION	--
10	UPPER RAISED PLANTER	SEE DETAILS: 4 & 5/ LS-1.8 , 1 & 2/ LS-1.9, AND 1 & 2/ LS-1.10 FOR ADDITIONAL INFORMATION	--
11	LOWER RAISED PLANTER	SEE DETAILS: 4 & 5/ LS-1.8 , 1 & 2/ LS-1.9, AND 1 & 2/ LS-1.10 FOR ADDITIONAL INFORMATION	--
12	BIO-SWALE (NOT INSTALLED IN PHASE 1)	SHOWN FOR REFERENCE ONLY. SEE PLANS BY OTHERS	--
13	BIOFILTRATION SWALE	SHOWN FOR REFERENCE ONLY. SEE PLANS BY OTHERS	--
14	CALTRANS CLEAR RECOVERY ZONE	30' FROM TRAVELED WAY FOR ALL NEW PLANTINGS GREATER THAN 4" DBH. SHOWN FOR REFERENCE ONLY. SEE PLANS BY OTHERS	--
15	IMPORT TOPSOIL AND PLACEMENT	SEE SHEET X-8 FOR SECTION. SEE LANDSCAPE PLANTING SPECIAL PROVISIONS FOR ADDITIONAL INFORMATION.	--
16	ROOT BARRIER, TYPICAL.	DEEP ROOT MODEL: LB-12 OR APPROVED EQUAL. TYPICAL FOR ALL TREES WITHIN 4' OR LESS OF HARDSCAPE	--

SEE SHEET LS-1.0 FOR PLANTING LEGEND

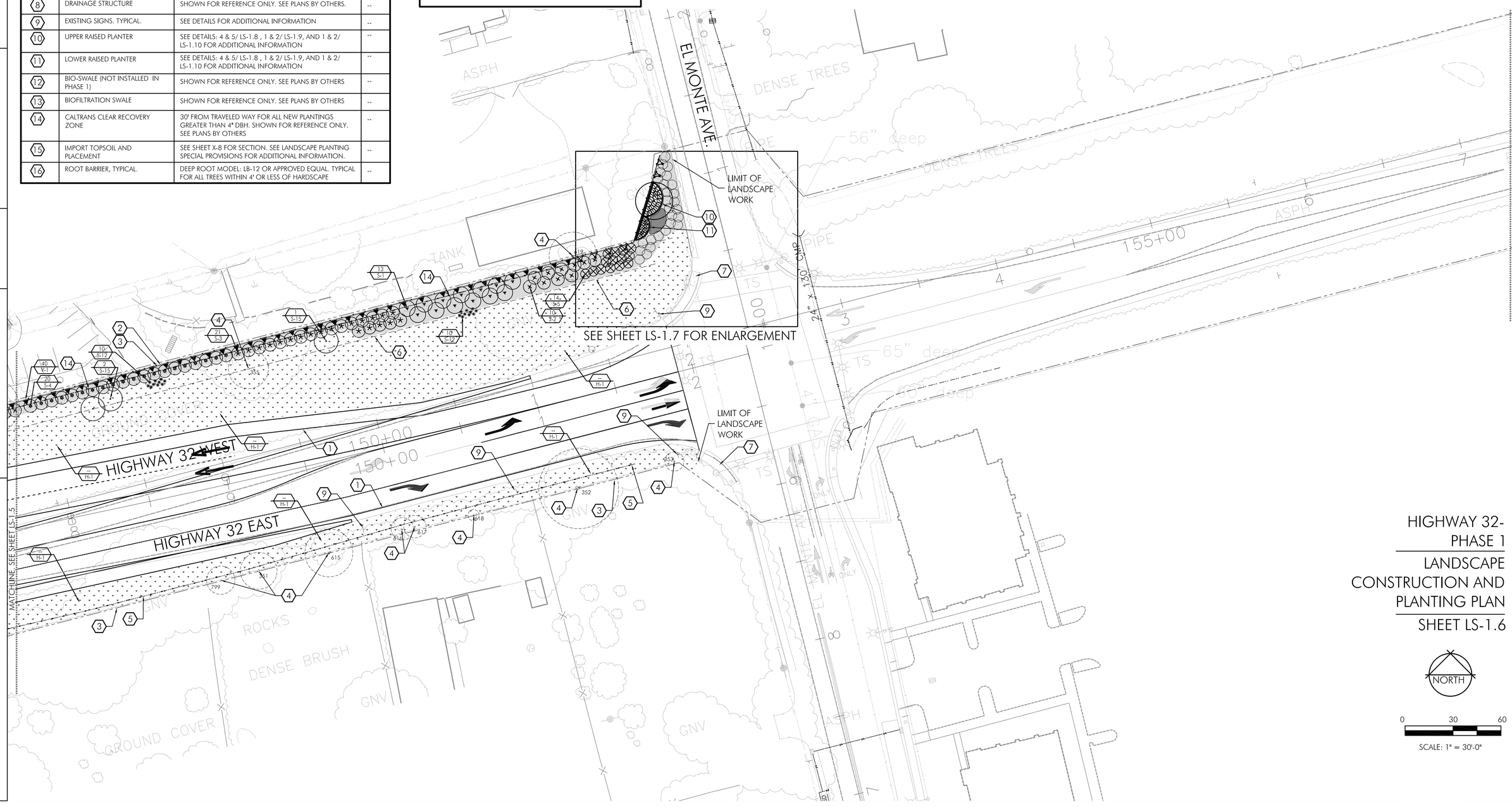

HIGHWAY 32-
PHASE 1
LANDSCAPE
CONSTRUCTION AND
PLANTING PLAN
SHEET LS-1.6

NORTH

0 30 60
SCALE: 1" = 30'-0"

STATE OF CALIFORNIA — DEPARTMENT OF TRANSPORTATION
Caltrans
CONSULTANT FUNCTIONAL SUPERVISOR: BRIAN FIRTH
CALCULATED-DESIGNED BY: B. FIRTH/ JBB
CHECKED BY: B. FIRTH
REVISED BY
DATE REVISED

LAST REVISION
DATE PLOTTED => $DATE
TIME PLOTTED => $TIME

ORDER LAST REVISED 12-22-11

0300000261

Dist	COUNTY	ROUTE	POST MILES TOTAL PROJECT	SHEET No.	TOTAL SHEETS
03	But	32	10.3/11.3	113	144

LICENSED LANDSCAPE ARCHITECT DATE 12-22-11

DECEMBER 22, 2011
PLANS APPROVAL DATE

THE STATE OF CALIFORNIA OR ITS OFFICERS

REGISTERED LANDSCAPE ARCHITECT BRIAN D. FIRTH #2752 EXP. 06-13 STATE OF CALIFORNIA

BRIAN FIRTH LANDSCAPE ARCHITECT, INC.
627 BROADWAY, SUITE 220
CHICO, CALIFORNIA 95928

CITY OF CHICO
CAPITAL PROJECT SERVICES
411 MAIN STREET
CHICO, CA 95927

SEE SHEET LS-1.0 FOR PLANTING LEGEND AND PLAN LEGEND

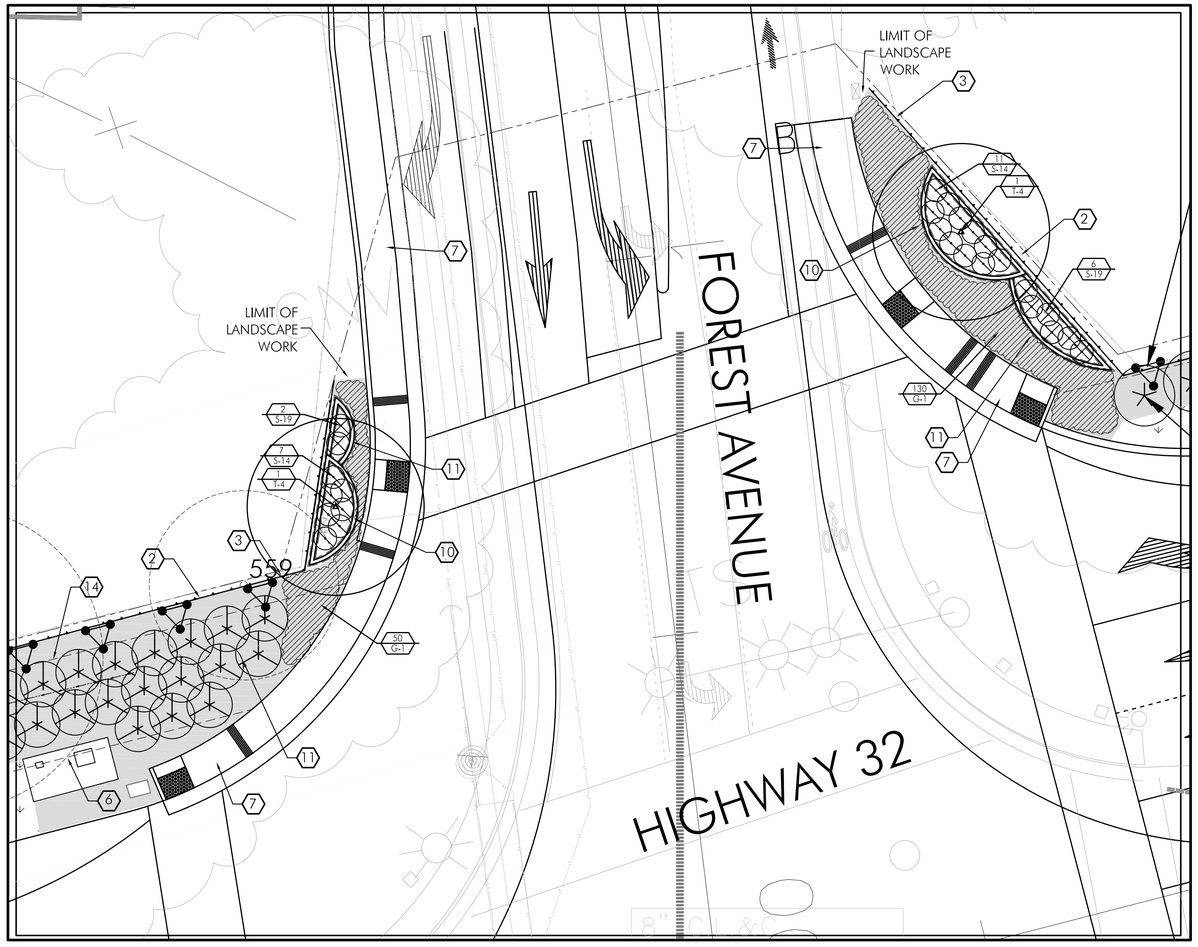

CORNER ENLARGEMENT: FOREST AVENUE AND HIGHWAY 32

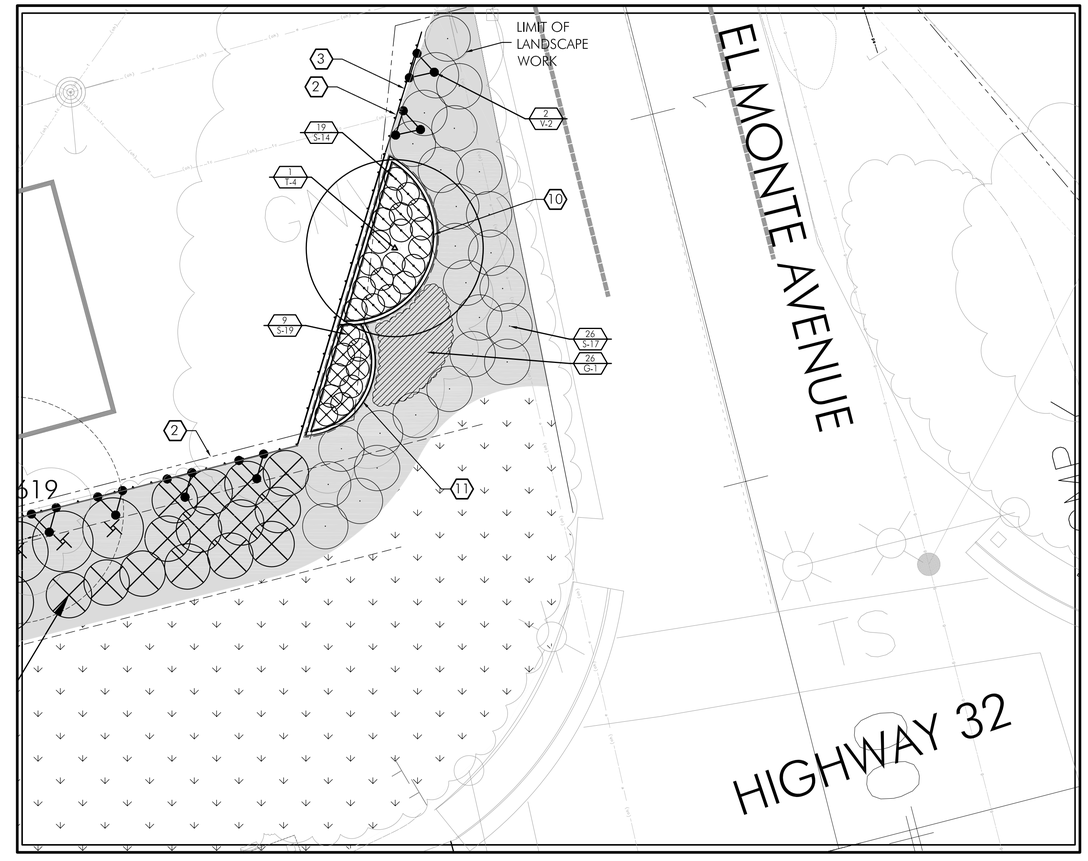

CORNER ENLARGEMENT: EL MONTE AVENUE AND HIGHWAY 32

HIGHWAY 32-
PHASE 1
LANDSCAPE CONSTRUCTION
AND PLANTING PLAN
SHEET LS-1.7

NORTH

0 10 20
SCALE: 1" = 10'-0"

0300000261

STATE OF CALIFORNIA – DEPARTMENT OF TRANSPORTATION	CONSULTANT FUNCTIONAL SUPERVISOR	CALCULATED-DESIGNED BY	REVISED BY	DATE REVISED
Caltrans	BRIAN FIRTH	B. FIRTH/ JBB		
		CHECKED BY		
		B. FIRTH		

LAST REVISION DATE PLOTTED => $DATE
TIME PLOTTED => $TIME

ORDER LAST REVISED 12-22-11

Dist	COUNTY	ROUTE	POST MILES TOTAL PROJECT	SHEET No.	TOTAL SHEETS
03	But	32	10.3/11.3	114	144

LICENSED LANDSCAPE ARCHITECT DATE 12-22-11

DECEMBER 22, 2011
PLANS APPROVAL DATE

REGISTERED LANDSCAPE ARCHITECT BRIAN D. FIRTH #2752 EXP. 06-13 STATE OF CALIFORNIA

THE STATE OF CALIFORNIA OR ITS OFFICERS OR AGENTS SHALL NOT BE RESPONSIBLE FOR THE ACCURACY OR COMPLETENESS OF SCANNED COPIES OF THIS PLAN SHEET.

BRIAN FIRTH LANDSCAPE ARCHITECT, INC.
627 BROADWAY, SUITE 220
CHICO, CALIFORNIA 95928

CITY OF CHICO
CAPITAL PROJECT SERVICES
411 MAIN STREET
CHICO, CA 95927

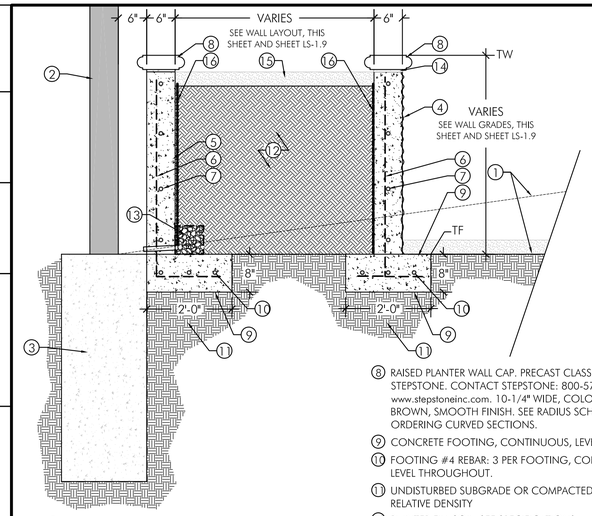

1. EXISTING GRADE- VARIES. SEE ENGINEERING PLANS BY MARK THOMAS & COMPANY. EXCAVATE AS REQUIRED TO ACCOMODATE RAISED PLANTERS. HAUL OFF EXCESS SOIL.
2. SOUNDWALL. SHOWN FOR REFERENCE ONLY. SEE PLANS BY MARK THOMAS & COMPANY.
3. SOUNDWALL FOOTING, WHERE APPLICABLE. SHOWN FOR REFERENCE ONLY. SEE PLANS BY MARK THOMAS & COMPANY.
4. FRONT PLANTER WALL. POURED IN PLACE CONCRETE WALL. COLORED CONCRETE: QC COLOR HARDENER: "CORTEZ RED" . FORM LINER FINISH, FRONT OF FRONT WALL, CUSTOM ROCK #203, "FRACTURED FIN"- CONTACT CUSTOM ROCK: 800-637-2447, info@customrock.com.
5. BACK RAISED PLANTER WALL. POURED IN PLACE CONCRETE (UNCOLORED). FORM FINISH.
6. #4 REBAR, VERTICAL @ 30" O.C.
7. #4 REBAR, HORIZONTAL , AS SHOWN. CONTINUOUS THROUGHOUT. SLOPE PARALLEL TO TOPS OF WALLS.
8. RAISED PLANTER WALL CAP. PRECAST CLASSIC WALL CAP BY STEPSTONE. CONTACT STEPSTONE: 800-572-9029/ www.stepstoneinc.com. 10-1/4" WIDE, COLOR: ESPRESSO BROWN, SMOOTH FINISH. SEE RADIUS SCHEDULE FOR ORDERING CURVED SECTIONS.
9. CONCRETE FOOTING, CONTINUOUS, LEVEL.
10. FOOTING #4 REBAR: 3 PER FOOTING, CONTINUOUS & LEVEL THROUGHOUT.
11. UNDISTURBED SUBGRADE OR COMPACTED TO 95% RELATIVE DENSITY
12. PLANTER FILL SOIL. SEE SPECIFICATIONS.
13. 1" SCH 40 PVC WEEP HOLE @ 36" O.C.. INSTALL WITH 6"X6"X6" MINIMUM, ¾" DRAIN ROCK IN FILTER FABRIC ENVELOPE AT EACH WEEP HOLE.
14. MORTAR: HYDRAMENT WITH LATICRETE ELASTOMERIC, COLOR HYRDAMENT COLOR: "KAHLUA CREAME". PROVIDE A REPRESENTATIVE SAMPLE TO LANDSCAPE ARCHITECT FOR APPROVAL PRIOR TO CONSTRUCTION OF RAISED PLANTERS.
15. 3" LAYER WOOD CHIP MULCH. SEE SPECIFICATIONS.
16. THOROSEAL CONCRETE & MASONRY SEALER ®: T1955 (OR APPROVED EQUAL). APPLY TO INSIDE OF ALL PLANTER WALLS TO BE IN CONTACT WITH PLANTER FILL SOIL.

NOTES:
1. APPLY CONCRETE SEALANT TO VERTICAL WALLS.
2. CUT CAP AS REQUIRED AT CHANGES IS DIRECTION AND WHERE DIFFERENT HEIGHT WALLS ABUT.

RAISED PLANTER WALL SECTION (UPPER AND LOWER) 5

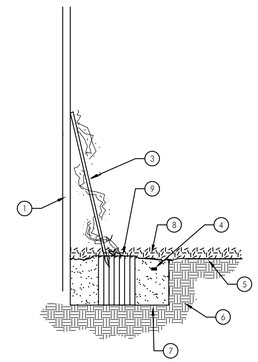

1. SOUNDWALL
2. NOT USED
3. LEAN NURSERY STAKE AGAINST SOUNDWALL
4. FERTILIZER TABLETS AS PER SPECIFICATIONS
5. FINISH GRADE SHRUB AND GROUND COVER AREA
6. NATIVE SOIL
7. PLANTING PIT TO BE TWICE THE DIAMETER OF ROOT BALL. FOR BACKFILL SEE SPECIFICATIONS
8. 3" LAYER WOOD CHIP MULCH. SEE SPECIFICATIONS.
9. ROOT BALL SET CROWN 1" ABOVE GRADE.

NOTE:
SEE DETAIL 2, THIS SHEET AND BOOK FORM SPECIFICATIONS FOR ADDITIONAL INFORMATION.

VINE PLANTING DETAIL 3

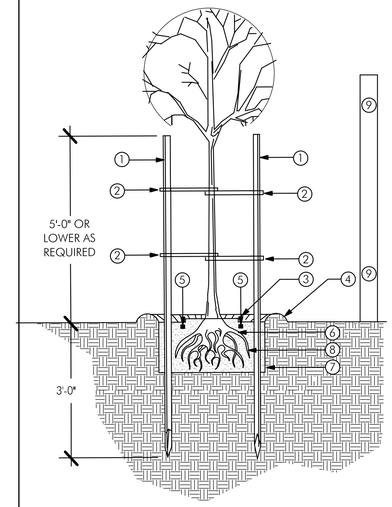

1. 8' HEAVY DUTY STEEL GREEN T-POST. PLACE POSTS PERPENDICULAR TO PREVAILING WINDS AND OUTSIDE ROOTBALL IN UNDISTURBED NATIVE SOIL. ALL POSTS TO BE PRIMED AND PAINTED SEMI-GLOSS BLACK.
2. 32" CINCH TIE TREE TIES AT (2) PLACES. SECURE TO T STAKES WITH ZIP TIES (2 PER CINCH TIE)
3. MULCH IN SHRUB AND GROUND- COVER AREAS (WHERE APPLICABLE). REFER TO SPECIFICATIONS
4. WATER RETENTION BERM REMOVE BEFORE INSTALLATION OF SOD (WHERE APPLICABLE).
5. FERTILIZER TABLETS, AS PER SPECIFICATIONS
6. ROOT BALL. FIRST ROOTS SHALL BE VISIBLE AT TOP OF ROOTBALL. SET CROWN 1" ABOVE FINISH GRADE TO ALLOW FOR SETTLING. BREAK UP SIDES OF BALL AND SPREAD OUT ROOTS. NO CIRCLING ROOTS SHALL REMAIN WITHIN 12" OF THE TREE TRUNK.
7. PLANT PIT SHALL BE TWICE THE DIAMETER OF ROOTBALL
8. BACKFILL PLANTER SOIL SEE SPECIFICATIONS
9. SOUNDWALL.SHOWN FOR REFERENCE ONLY, SEE PLANS BY OTHERS. INSTALL TREE PLANTINGS A MINIMUM OF 4'-0" AWAY FROM SOUNDWALL.

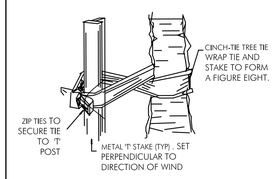

TREE TIE

NOTES:
1. APPLY A 3" LAYER WOOD CHIP MULCH TO ALL NON-HYDROSEEDED LANDSCAPED AREAS. SEE BOOK FORM SPECIFICAITONS.
3. INSTALL ROOT BARRIER (DEEP ROOT LB-12 OR APPROVED EQUAL) AS DEPICTED ON DRAWINGS.

TREE PLANTING TYPICAL DETAIL 1

1. SOUNDWALL. SEE PLANS BY MARK THOMAS & COMPANY FOR ADDITIONAL INFORMATION.
2. FRONT RASIED PLANTER WALL. POURED IN PLACE CONCRETE WALL. INTEGRAL COLORED CONCRETE: QC COLOR: "JAVA BROWN" (CC67). FORM LINER FINISH, FRONT OF FRONT WALL, CUSTOM ROCK #203, "FRACTURED FIN"- CONTACT CUSTOM ROCK: 800-637-2447, info@customrock.com. SEE NOTES.
3. CONCRETE FLATWORK. SEE PLANS BY MARK THOMAS & COMPANY FOR ADDITIONAL INFORMATION.
4. ½" VERTICAL CHAMFER. TYPICAL AT PLANTER ENDS.
5. BACK RAISED PLANTER WALL (BACK). POURED IN PLACE CONCRETE (UNCOLORED), FORM FINISH.
6. RAISED WALL CAP. SEE DETAIL 5, THIS SHEET.
7. CONSTRUCTION JOINT. TYPICAL.

NOTES:
1. REFER TO BOOK FORM SPECIFICATIONS FOR ADDITIONAL INFORMATION.
2. CONTRACTOR SHALL MOCK UP A 24" X 24" REPRESENTATIVE SAMPLE OF COLORED CONCRETE, FORMLINER FINISH, COLORED MORTAR AND COLORED WALL CAP FOR LANDSCAPE ARCHITECT'S APPROVAL PRIOR TO CONSTRUCTION OF RAISED PLANTERS. SEE DETAIL 5, SHEET LS-1.8 FOR ADDITIONAL INFORMATION.
3. WALL HEIGHTS ARE BASED UPON SOUNDWALL HEIGHTS FROM MARK THOMAS AND COMPANY. ADJUST DECORATIVE WALL HEIGHTS ACCORDINGLY IN THE EVENT THAT SOUNDWALL AS-BUILT HEIGHTS ARE DIFFERENT

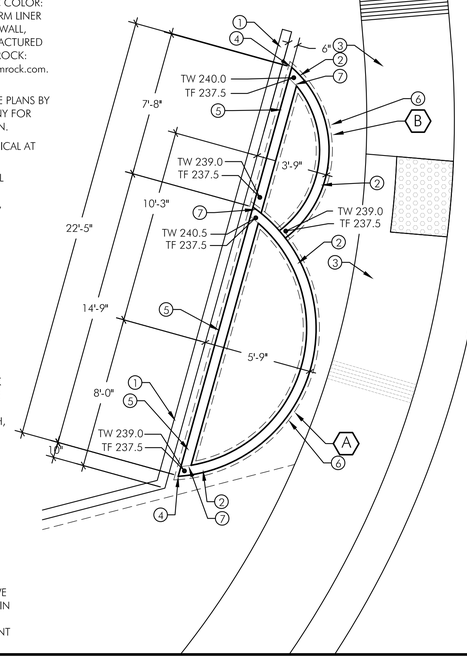

WALL CAP RADIUS SCHEDULE

A 8'-0" RADIUS
B 6'-0" RADIUS

SCALE: 1/4"= 1'-0"

RAISED PLANTER WALL WEST SIDE OF FOREST 4

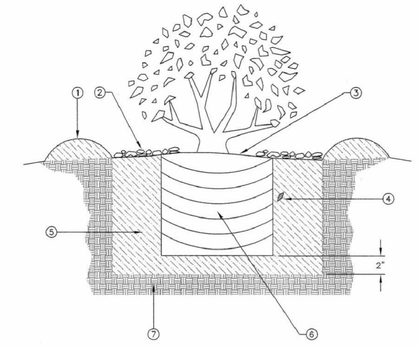

SECTION VIEW

NOTES:
1. ~~TEMPORARY~~ WATERING BASIN; 4" HIGH BERM, TWICE THE DIAMETER OF THE ROOTBALL.
2. TOP DRESSING: MULCH PER SPECIFICATIONS.
3. SET CROWN OF PLANT 1" ABOVE FINISH GRADE SOIL TO ALLOW FOR SETTLEMENT.
4. FERTILIZER TABLET(S) PER SPECIFICATIONS.
5. BACKFILL MIXTURE PER SPECIFICATIONS.
6. WELL DEVELOPED SHRUB ROOTBALL.
7. PLANTING HOLE SHALL BE TWICE DIAMETER OF ROOTBALL & 2" DEEPER THAN THE SHRUB ROOTBALL; SCARIFY SIDES AND BOTTOM OF HOLE FOR ALL LINERS, ONE, FIVE AND FIFTEEN GALLON SHRUBS.

REVISION	BY	DATE	APP. BY COUNCIL

CITY OF CHICO — STANDARD PLAN

DRAWN BY: GL DATE: 10/06
CHECKED BY: DB SCALE: NONE
APPROVED: DIRECTOR OF ENGINEERING

CONTAINERIZED SHRUB PLANTING DETAIL

NO. LS-3
SHEET 1 OF 1

SHRUB PLANTING TYPICAL DETAIL 2

HIGHWAY 32-
PHASE 1
LANDSCAPE CONSTRUCTION AND PLANTING DETAILS
SHEET LS-1.8

LAST REVISION 00-00-00
DATE PLOTTED => $DATE
TIME PLOTTED => $TIME

REVISED BY | DATE REVISED
CALCULATED-DESIGNED BY: B. FIRTH/ JBB
CHECKED BY: B. FIRTH
CONSULTANT FUNCTIONAL SUPERVISOR: BRIAN FIRTH
STATE OF CALIFORNIA — DEPARTMENT OF TRANSPORTATION
Caltrans®

Dist	COUNTY	ROUTE	POST MILES TOTAL PROJECT	SHEET No.	TOTAL SHEETS
03	But	32	10.3/11.3	115	144

LICENSED LANDSCAPE ARCHITECT 12-22-11 DATE

DECEMBER 22, 2011
PLANS APPROVAL DATE

REGISTERED LANDSCAPE ARCHITECT BRIAN D. FIRTH #2752 EXP. 06-13 STATE OF CALIFORNIA

THE STATE OF CALIFORNIA OR ITS OFFICERS OR AGENTS SHALL NOT BE RESPONSIBLE FOR THE ACCURACY OR COMPLETENESS OF SCANNED COPIES OF THIS PLAN SHEET.

BRIAN FIRTH LANDSCAPE ARCHITECT, INC.
627 BROADWAY, SUITE 220
CHICO, CALIFORNIA 95928

CITY OF CHICO
CAPITAL PROJECT SERVICES
411 MAIN STREET
CHICO, CA 95927

1. SOUNDWALL. SEE PLANS BY MARK THOMAS & COMPANY FOR ADDITIONAL INFORMATION.
2. FRONT RAISED PLANTER WALL. POURED IN PLACE CONCRETE WALL. INTEGRAL COLORED CONCRETE: QC COLOR: "JAVA BROWN" (CC67). FORM LINER FINISH, FRONT OF FRONT WALL, CUSTOM ROCK #203, 'FRACTURED FIN"- CONTACT CUSTOM ROCK: 800-637-2447, info@customrock.com. SEE NOTES.
3. CONCRETE FLATWORK. SEE PLANS BY MARK THOMAS & COMPANY FOR ADDITIONAL INFORMATION.
4. 1/4" VERTICAL CHAMFER. TYPICAL AT PLANTER ENDS.
5. BACK RAISED PLANTER WALL. POURED IN PLACE CONCRETE (UNCOLORED), FORM FINISH.
6. RAISED PLANTER WALL CAP. SEE DETAIL 5, THIS SHEET.
7. CONSTRUCTION JOINT

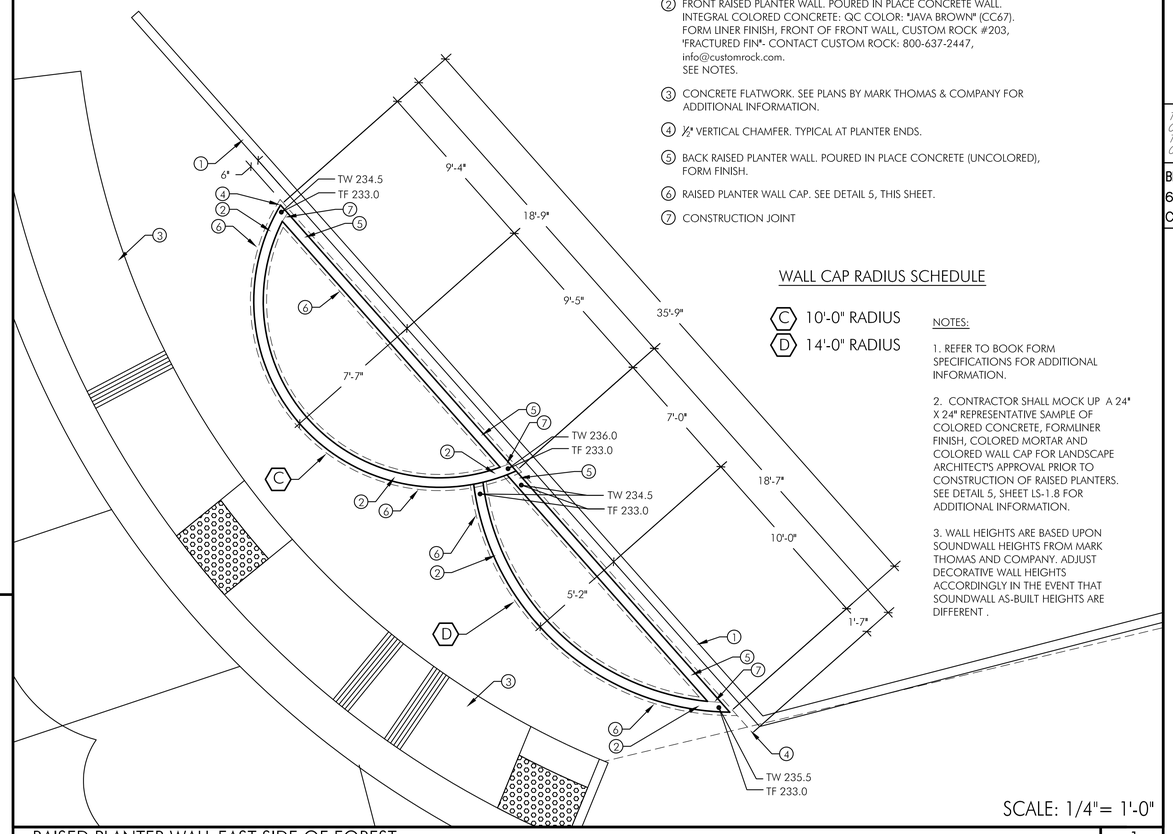

WALL CAP RADIUS SCHEDULE

C 10'-0" RADIUS
D 14'-0" RADIUS

NOTES:

1. REFER TO BOOK FORM SPECIFICATIONS FOR ADDITIONAL INFORMATION.

2. CONTRACTOR SHALL MOCK UP A 24" X 24" REPRESENTATIVE SAMPLE OF COLORED CONCRETE, FORMLINER FINISH, COLORED MORTAR AND COLORED WALL CAP FOR LANDSCAPE ARCHITECT'S APPROVAL PRIOR TO CONSTRUCTION OF RAISED PLANTERS. SEE DETAIL 5, SHEET LS-1.8 FOR ADDITIONAL INFORMATION.

3. WALL HEIGHTS ARE BASED UPON SOUNDWALL HEIGHTS FROM MARK THOMAS AND COMPANY. ADJUST DECORATIVE WALL HEIGHTS ACCORDINGLY IN THE EVENT THAT SOUNDWALL AS-BUILT HEIGHTS ARE DIFFERENT .

SCALE: 1/4"= 1'-0"

RAISED PLANTER WALL EAST SIDE OF FOREST | 1

1. SOUNDWALL. SEE PLANS BY MARK THOMAS & COMPANY FOR ADDITIONAL INFORMATION.
2. FRONT RAISED PLANTER WALL. POURED IN PLACE CONCRETE WALL. INTEGRAL COLORED CONCRETE: QC COLOR: "JAVA BROWN" (CC67). FORM LINER FINISH, FRONT OF FRONT WALL, CUSTOM ROCK #203, 'FRACTURED FIN"- CONTACT CUSTOM ROCK: 800-637-2447, info@customrock.com. SEE NOTES.
3. CONCRETE FLATWORK. SEE PLANS BY MARK THOMAS & COMPANY FOR ADDITIONAL INFORMATION.
4. 1/4" VERTICAL CHAMFER. TYPICAL AT PLANTER ENDS.
5. BACK RAISED PLANTER WALL. POURED IN PLACE CONCRETE (UNCOLORED), FORM FINISH.
6. RAISED PLANTER WALL CAP. SEE DETAIL 5, THIS SHEET.
7. CONSTRUCTION JOINT

WALL CAP RADIUS SCHEDULE

E 10'-0" RADIUS
F 12'-0" RADIUS

NOTES:

1. REFER TO BOOK FORM SPECIFICATIONS FOR ADDITIONAL INFORMATION.

2. CONTRACTOR SHALL MOCK UP A 24" X 24" REPRESENTATIVE SAMPLE OF COLORED CONCRETE, FORMLINER FINISH, COLORED MORTAR AND COLORED WALL CAP FOR LANDSCAPE ARCHITECT'S APPROVAL PRIOR TO CONSTRUCTION OF RAISED PLANTERS. SEE DETAIL 5, SHEET LS-1.8 FOR ADDITIONAL INFORMATION.

3. WALL HEIGHTS ARE BASED UPON SOUNDWALL HEIGHTS FROM MARK THOMAS AND COMPANY. ADJUST DECORATIVE WALL HEIGHTS ACCORDINGLY IN THE EVENT THAT SOUNDWALL AS-BUILT HEIGHTS ARE DIFFERENT .

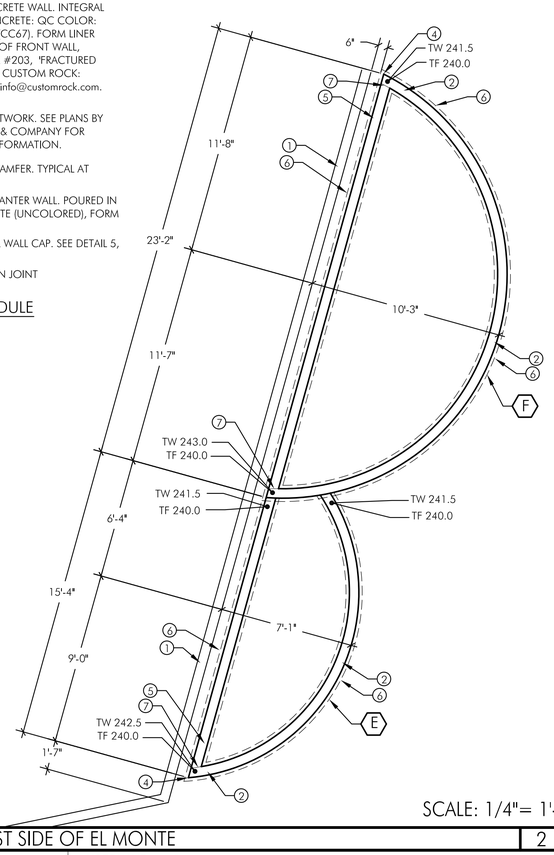

SCALE: 1/4"= 1'-0"

RAISED PLANTER WALL WEST SIDE OF EL MONTE | 2

HIGHWAY 32-
PHASE 1
LANDSCAPE
CONSTRUCTION DETAILS
SHEET LS-1.9

REVISED BY	DATE REVISED

CALCULATED-DESIGNED BY: B. FIRTH/ JBB
CHECKED BY: B. FIRTH
CONSULTANT FUNCTIONAL SUPERVISOR: BRIAN FIRTH
STATE OF CALIFORNIA – DEPARTMENT OF TRANSPORTATION
Caltrans

LAST REVISION 00-00-00
DATE PLOTTED => $DATE
TIME PLOTTED => $TIME

Dist	COUNTY	ROUTE	POST MILES TOTAL PROJECT	SHEET No.	TOTAL SHEETS
03	But	32	10.3/11.3	116	144

12-22-11
LICENSED LANDSCAPE ARCHITECT DATE

DECEMBER 22, 2011
PLANS APPROVAL DATE

REGISTERED LANDSCAPE ARCHITECT BRIAN D. FIRTH #2752 EXP. 06-13 STATE OF CALIFORNIA

THE STATE OF CALIFORNIA OR ITS OFFICERS OR AGENTS SHALL NOT BE RESPONSIBLE FOR THE ACCURACY OR COMPLETENESS OF SCANNED COPIES OF THIS PLAN SHEET.

BRIAN FIRTH LANDSCAPE ARCHITECT, INC.
627 BROADWAY, SUITE 220
CHICO, CALIFORNIA 95928

CITY OF CHICO
CAPITAL PROJECT SERVICES
411 MAIN STREET
CHICO, CA 95927

SEE SHEET LS-1.0 FOR PLANTING LEGEND AND PLAN LEGEND

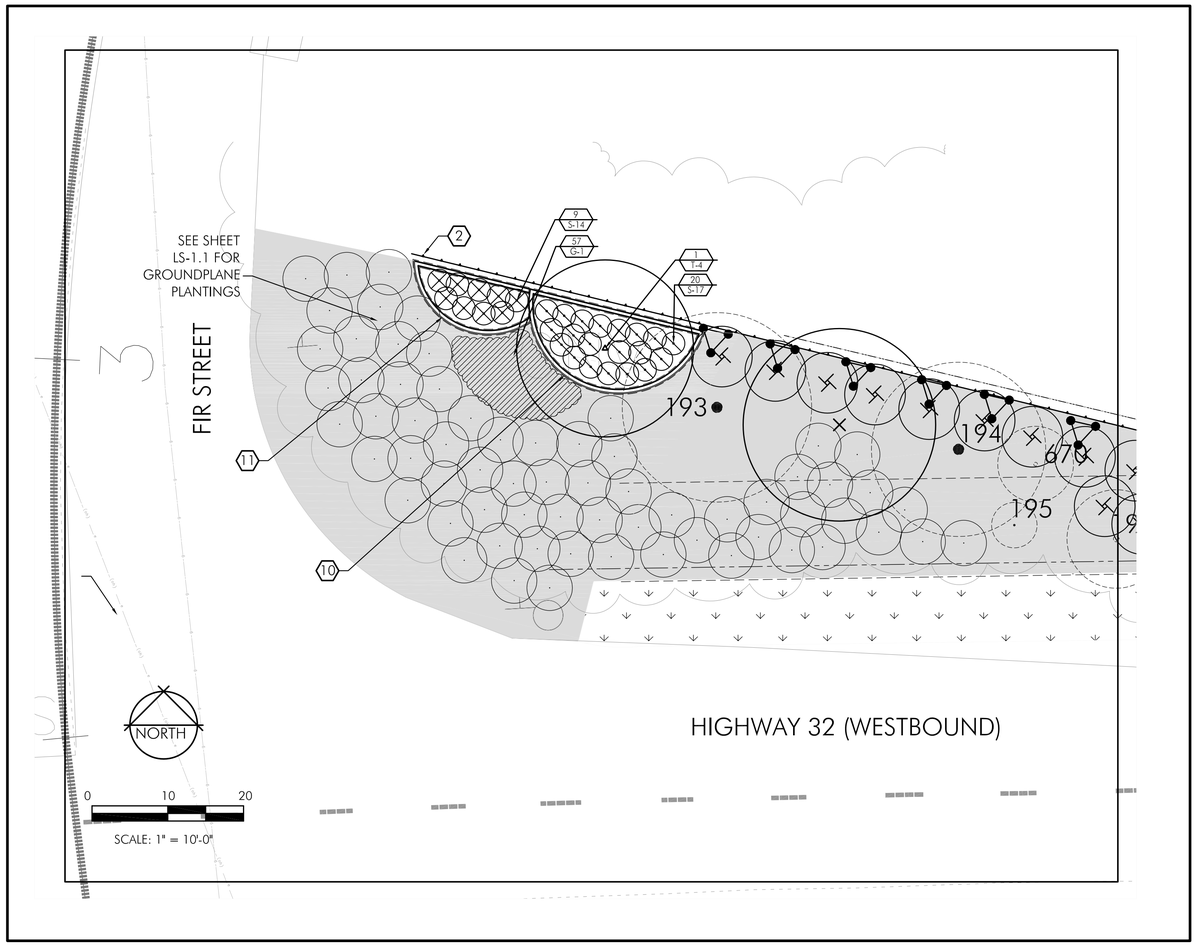

CORNER PLANTING ENLARGEMENT: FIR STREET AND HIGHWAY 32

1. SOUNDWALL. SEE PLANS BY MARK THOMAS & COMPANY FOR ADDITIONAL INFORMATION.
2. FRONT RAISED PLANTER WALL. POURED IN PLACE CONCRETE WALL. INTEGRAL COLORED CONCRETE: QC COLOR: "JAVA BROWN" (CC67). FORM LINER FINISH, FRONT OF FRONT WALL, CUSTOM ROCK #203, "FRACTURED FIN"- CONTACT CUSTOM ROCK: 800-637-2447, info@customrock.com. SEE NOTES.
3. NOT APPLICABLE
4. ½" VERTICAL CHAMFER. TYPICAL AT PLANTER ENDS.
5. RAISED PLANTER WALL (BACK). POURED IN PLACE CONCRETE (UNCOLORED), FORM FINISH.
6. WALL CAP. SEE DETAIL 5, THIS SHEET.
7. CONSTRUCTION JOINT

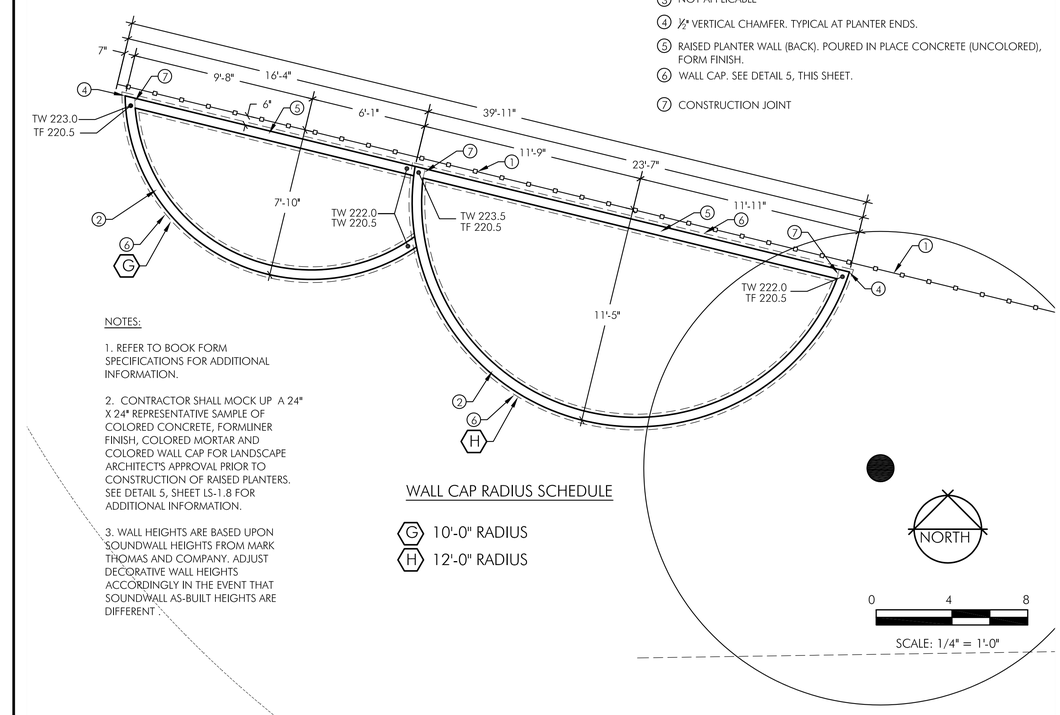

NOTES:

1. REFER TO BOOK FORM SPECIFICATIONS FOR ADDITIONAL INFORMATION.

2. CONTRACTOR SHALL MOCK UP A 24" X 24" REPRESENTATIVE SAMPLE OF COLORED CONCRETE, FORMLINER FINISH, COLORED MORTAR AND COLORED WALL CAP FOR LANDSCAPE ARCHITECTS APPROVAL PRIOR TO CONSTRUCTION OF RAISED PLANTERS. SEE DETAIL 5, SHEET LS-1.8 FOR ADDITIONAL INFORMATION.

3. WALL HEIGHTS ARE BASED UPON SOUNDWALL HEIGHTS FROM MARK THOMAS AND COMPANY. ADJUST DECORATIVE WALL HEIGHTS ACCORDINGLY IN THE EVENT THAT SOUNDWALL AS-BUILT HEIGHTS ARE DIFFERENT.

WALL CAP RADIUS SCHEDULE

G 10'-0" RADIUS
H 12'-0" RADIUS

RAISED PLANTER WALL EAST SIDE OF FIR STREET

CORNER CONSTRUCTION ENLARGEMENT: FIR STREET AND HIGHWAY 32

HIGHWAY 32-PHASE 1

LANDSCAPE CONSTRUCTION AND PLANTING PLAN

SHEET LS-1.10

STATE OF CALIFORNIA — DEPARTMENT OF TRANSPORTATION
CONSULTANT FUNCTIONAL SUPERVISOR: BRIAN FIRTH
CALCULATED-DESIGNED BY: B. FIRTH/ JBB
CHECKED BY: B. FIRTH
REVISED BY
DATE REVISED

LAST REVISION 00-00-00
DATE PLOTTED => $DATE
TIME PLOTTED => $TIME

Dist	COUNTY	ROUTE	POST MILES TOTAL PROJECT	SHEET No.	TOTAL SHEETS
03	But	32	10.3/11.3	117	144

LICENSED LANDSCAPE ARCHITECT 12-22-11 DATE

DECEMBER 22, 2011
PLANS APPROVAL DATE

REGISTERED LANDSCAPE ARCHITECT BRIAN D. FIRTH #2752 EXP. 06-13 STATE OF CALIFORNIA

THE STATE OF CALIFORNIA OR ITS OFFICERS OR AGENTS SHALL NOT BE RESPONSIBLE FOR THE ACCURACY OR COMPLETENESS OF SCANNED COPIES OF THIS PLAN SHEET.

BRIAN FIRTH LANDSCAPE ARCHITECT, INC.
627 BROADWAY, SUITE 220
CHICO, CALIFORNIA 95928

CITY OF CHICO
CAPITAL PROJECT SERVICES
411 MAIN STREET
CHICO, CA 95927

IRRIGATION NOTES

1. THIS SYSTEM IS DESIGNED FOR A MAXIMUM DEMAND OF 40 GPM. AVERAGE STATIC PRESSURE IS 50 PSI AT THE POINT OF CONNECTION AND NO LESS THAN 5 PSI AT THE FARTHEST IRRIGATION EMITTER AND 30 PSI AT THE FARTHEST IRRIGATION SPRAY HEAD. CONTACT THE LANDSCAPE ARCHITECT IN THE EVENT THAT FIELD TESTED PRESSURE IS LESS THAN STATED, PRIOR TO CONSTRUCTION.
2. THE INTENT OF THIS IRRIGATION SYSTEM IS TO PROVIDE THE MINIMUM AMOUNT OF WATER REQUIRED TO SUSTAIN GOOD PLANT HEALTH. ADJUST CLOCK AS REQUIRED TO ACHIEVE THIS GOAL AS REQUIRED BY THE TIME OF YEAR. SEE SHEET LS-2.10 FOR SEASONAL IRRIGATION SCHEDULE. ADJUST AS REQUIRED FOR PLANT ESTABLISHMENT PERIOD.
3. THIS DRAWING IS DIAGRAMMATIC. IRRIGATION COMPONENTS SHOWN BENEATH PAVING, EXISTING TREE TRUNKS, OR PLANTINGS IS FOR GRAPHIC CLARITY ONLY. PLACE ALL PIPING, VALVES, AND OTHER IRRIGATION COMPONENTS WITHIN THE ADJACENT PLANTER EXCEPT WHERE PIPES CROSS PAVING. PLACE PIPING TO PREVENT CONFLICT WITH SUBSEQUENT PLANTING. REFER TO PLANTING PLAN. IRRIGATION VALVES SHALL BE GROUPED TOGETHER PER DETAIL 7, SHEET LS-2.8 AND LOCATED A MINIMUM OF 17 FEET FROM THE EDGE OF TRAVELLED WAY TO ALLOW ACCESS.
4. CONTRACTOR TO PROVIDE COMPLETE 'AS-BUILT' DRAWINGS TO CITY AT COMPLETION OF PROJECT.
5. TRENCH ALL MAIN LINES TO A DEPTH OF 18", TRENCH ALL LATERAL LINES TO A DEPTH OF 12". TRENCH ALL MAIN OR LATERAL LINES PER UTILITY PLAN AND CAL TRANS STANDARDS" WHERE CROSSING UNDER PAVEMENT .
6. INSTALL SLEEVES WHERE SHOWN ON PLAN, PRIOR TO THE PLACEMENT OF PAVING. COORDINATE WITH PAVING CONTRACTOR.
7. ALL REMOTE CONTROL VALVES, QUICK COUPLER VALVES, AIR RELIEF VALVES, AND FLUSH VALVES SHALL BE INSTALLED IN PLANTER AND IN VALVE BOXES.
8. CONTRACTOR IS RESPONSIBLE FOR PROVIDING 120 VOLT POWER TO IRRIGATION CONTROLLER. IRRIGATION CONTRACTOR IS RESPONSIBLE FOR THE COORDINATION AND HOOK-UP OF POWER TO THE CONTROLLER.
9. SEE SHEET LS-2.9 FOR SYSTEM CAPACITY DOCUMENTATION. SEE SHEET LS-2.10 FOR WATER USE DOCUMENTATION.
10. ALL PROPRIETARY SPECIFICATIONS MAY BE SUBSTITUTED WITH EQUAL OR BETTER EQUIPMENT BY ANOTHER MANUFACTURER UPON APPROVAL BY PROJECT LANDSCAPE ARCHITECT.
11. SEE DETAILS AND SPECIFICATIONS FOR ADDITIONAL INFORMATION.

IRRIGATION LEGEND

SYM.	MFG'R	DESCRIPTION	MODEL	REMARKS	DETAILS
⊗		WATER POINT OF CONNECTION		CONNECT TO EXISTING WATER METER DOWNSTREAM OF METER. VERIFY EXACT LOCATION IN FIELD. CONTRACTOR SHALL FIELD VERIFY EXISTING CONDITIONS. PRE-BID WALK-THROUGH WILL INCLUDE REVIEW AND DETERMINATION AS TO FINAL COURSE OF ACTION AT THIS LOCATION.	--
BFP	WILKINS	BACKFLOW PREVENTER ASSEMBLY	975 XL	REMOVE EXISTING BACKFLOW PREVENTER ASSEMBLY, ENCLOSURE AND PAD. VERIFY CONDITIONS IN FIELD. RETURN BACKFLOW PREVENTER AND ENCLOSURE TO THE CITY OF CHICO. INSTALL NEW 2" SIZE BACKFLOW PREVENTER PER DETAIL. PROVIDE AND INSTALL ENCLOSURE AND INSULATED BLANKET. CONTRACTOR SHALL FIELD VERIFY EXISTING CONDITIONS. PRE-BID WALK-THROUGH WILL INCLUDE REVIEW AND DETERMINATION AS TO FINAL COURSE OF ACTION AT THIS LOCATION.	1/ LS-2.8
	STRONG BOX		SBBC-45AL		
C	JOHN DEERE GREEN TECH	CONTROLLER	CA1-RM5-36/ RFRZE/ LPP/ EMP18/ PED-1.8SS/ FAN-OPT/ 20RMD1/ FSF-2008	REMOVE EXISTING CONTROLLER AND ENCLOSURE AND RETURN TO CITY OF CHICO. REMOVE AND DISPOSE OF OFF SITE THE EXISTING CONCRETE PAD. RETAIN AND PROTECT ELECTRICAL POINT OF CONNECTION.NEW CONTROLLER: 48 STATIONS (15 USED) 2-WIRE DECODER CONTROLLER WITH TDI TWO WIRE DECODER INTERFACE; INSTALL IN STAINLESS STEEL TOP ENTRY ENCLOSURE WITH PRO-MAX REMOTE. INSTALL COMMUNICATION WIRE FROM CONTROLLER TO PHONE MODEM POINT OF CONNECTION (LOCATED ON THE WEST SIDE OF FOREST, APPROXIMATELY 200 FEET NORTH OF HIGHWAY 32 ON FOREST. VERIFY EXACT LOCATION IN FIELD) USING CAT 5 WIRE IN 2" CONDUIT. CONTRACTOR IS RESPONSIBLE TO COORDINATE WITH THE CITY OF CHICO TO INVOLVE CITY OF CHICO IT DEPARTMENT TO OBTAIN A TELECOMMUNICATION POINT OF CONNECTION AND FOR THE CONNECTION OF THE CONTROLLERS TO THE INTERNET. CONTACT EARL KEENE, INFORMATION SYSTEMS ANALYST: 896-8400. INSTALL 2-WIRE CABLE TO DECODER LOCATIONS USING TW-CAB-14 CABLE INSTALLED IN 2" CONDUIT. INSTALL 2-WIRE DECODERS AT REMOTE CONTROL VALVE LOCATIONS, INSTALL ONE DECODER WITH EACH REMOTE CONTROL VALVE. INSTALL 2-WIRE EARTH GROUND AT LOCATIONS SHOWN, NOT TO EXCEED 600' INTERVALS. INSTALL 2-WIRE COMPONENTS PER MANUFACTURER'S SPECIFICATIONS. PROVIDE ONE (1) PROMAX HAND HELD TRANSMITTER TO OWNER AT END OF MAINTENANCE PERIOD. CONTACT JOHN DEERE GREEN TECH: 800-427-0779 FOR TECHNICAL ASSISTANCE AND CONTROLLER CERTIFICATION. CONTRACTOR SHALL BE RESPONSIBLE TO COORDINATE PRE-CONSTRUCTION MEETING WITH MANUFACTURER TO REVIEW 2-WIRE INSTALLATION REQUIREMENTS. SEE SPECIFICATIONS FOR ADDITIONAL INFORMATION. CONTRACTOR SHALL FIELD VERIFY EXISTING CONDITIONS. PRE-BID WALK-THROUGH WILL INCLUDE REVIEW AND DETERMINATION AS TO FINAL COURSE OF ACTION AT THIS LOCATION.	2/ LS-2.8 AND 6/ LS-2.9
	RAIN MASTER	2-WIRE DECODER	TWD-1		
	RAIN MASTER	2-WIRE EARTH GROUND	TW-LA-1		
	RAIN MASTER	2-WIRE DECODER CABLE	TW-CAB-14		
		2-WIRE SPLICE	TW-SPLICE-14		
FSA	JOHN DEERE GREEN TECH	FLOW SENSING ASSEMBLY/ OPEN MASTER VALVE 2"	FSF-2008	INSTALL IN CARSON 1419 VALVE BOX AS PER MANUFACTURER'S SPECIFICATIONS	3/ LS-2.8
PB	"	PULL BOX	--	INSTALL IN GRAY CARSON 1419 (OR APPROVED EQUAL) VALVE BOX.	5/ LS-2.9
⚡	RAIN MASTER	LIGHTNING ARRESTOR	TW-LA-1	INSTALL AT LOCATIONS DEPICTED ON PLANS (NOT MORE THAN 600' MAXIMUM DISTANCE). CONTRACTOR TO PROVIDE AND INSTALL 8' L X ⅝" DIA., COPPER CLAD GROUND ROD PER MANUFACTURER'S SPECIFICATIONS AT EACH LOCATION.	6/ L-2.9
⊕	RAINBIRD	REMOTE CONTROL VALVE (SPRAY)	PEB	SIZE AS SHOWN. INSTALL VALVE AND DECODER WITHIN VALVE BOX, PER DETAIL. PROVIDE AND INSTALL GROUNDING FOR TWO-WIRE DECODERS PER MANUFACTURER'S SPECIFICATIONS (1 FOR EVERY 600 FEET).	2/ LS-10 & 7/ LS-2.8
	RAINMASTER	2 WIRE DECODERS	TW-D-1		
⊕ Y		REMOTE CONTROL VALVE (DRIP)			
	RAINBIRD	FOR FLOWS OVER 20 GPM: MEDIUM FLOW COMMERCIAL CONTROL ZONE KIT WITH BASKET FILTER	XCZ-150-COM	INSTALL PER MANUFACTURER'S SPECIFICATIONS. SIZE PER FLOW (SEE DESCRIPTION COLUMN). INSTALL VALVE AND DECODER WITHIN VALVE BOX, PER DETAIL. PROVIDE AND INSTALL GROUNDING FOR TWO-WIRE DECODERS PER MANUFACTURER'S SPECIFICATIONS (1 FOR EVERY 600 FEET).	4 & 7/ LS-2.8
	RAINBIRD	FOR FLOWS 5-20 GPM: MEDIUM FLOW COMMERCIAL CONTROL ZONE KIT WITH BASKET FILTER	XCZ-100-B-COM		
	RAINBIRD	FOR FLOWS LESS THAN 5 GPM: MEDIUM FLOW COMMERCIAL CONTROL ZONE KIT WITH BASKET FILTER	XCZ-075-PRF-BF		
⋈	NIBCO	ISOLATION VALVE	TI-7	SIZE PER PIPE. INSTALL WITHIN VALVE BOX, PER DETAIL.	5 & 7/ LS-2.8
◎	RAINBIRD	QUICK COUPLER VALVE	44-LRC	INSTALL WITHIN VALVE BOX PER DETAIL.	6 & 7/ LS-2.8
— —		PRESSURE MAINLINE		PVC SCHEDULE 40	3 & 4/ LS-2.9
——		NON-PRESSURE LATERAL PIPE		PVC SCHEDULE 40. SEE PVC SCHEDULE 40 PIPE SIZE CHART, THIS SHEET.	3 & 4/ LS-2.9
• • • •		CONDUIT		GRAY PVC SCH. 40	3 & 4/ LS-2.9
— · —		SLEEVING		PVC SCHEDULE 40. PER PLANS BY MARK THOMAS COMPANY	3 & 4/ LS-2.9
		SCH. 40 PVC LATERAL SWING PIPE EMITTER (SEE LEGEND, BELOW)	SPX-FLEX 100	⅝" IPS PVC FLEX HOSE. LOW DENSITY POLYETHYLENE MATERIAL. TUBING SHALL HAVE A WALL THICKNESS OF 0.098".49" INSIDE DIAMETER	1 & 2/ LS-2.9

1 — VALVE #/CONTROLLER STATION
1" — VALVE SIZE (WHERE APPLICABLE-USE FLOW PRECEDENT FOR DRIP VALVES)
8.48 — FLOW IN GALLONS PER MINUTE
2.2 — PRECIPITATION RATE

SPRINKLER LEGEND

SYMBOL	MFG'R	DESCRIPTION	MODEL	FLOW (GPM)	DETAIL
	SALCO/ RAINBIRD	EMITTER/ SWINGPIPE, SHRUBS- (SALCO PRO-SPEC EMITTERS WITH RAINBIRD SPX SERIES SWING PIPE AND SB SERIES FITTINGS)	SALCO PRO-SPEC EMITTER: SLV-PST-2 SWING PIPE: SPX-100 FITTINGS: SBE-050/ SBA-050/ SB-TEE (AS REQUIRED)	2 GPH PER EMITTER/ 4 GPH PER SHRUB BUBBLER ASSEMBLY (2 EMITTERS PER SHRUB)	1/ LS-2.8
	SALCO/ RAINBIRD	EMITTER/ SWINGPIPE, VINES- (SALCO PRO-SPEC EMITTERS WITH RAINBIRD SPX SERIES SWING PIPE AND SB SERIES FITTINGS)	SALCO PRO-SPEC EMITTER: SLV-PST-2 SWING PIPE: SPX-100 FITTINGS: SBE-050/ SBA-050/ SB-TEE (AS REQUIRED)	2 GPH PER EMITTER/ 4 GPH PER VINE BUBBLER ASSEMBLY (2 EMITTERS PER VINE)	1/ LS-2.8
	SALCO/ RAINBIRD	EMITTER/ SWINGPIPE, TREES- (SALCO PRO-SPEC EMITTERS WITH RAINBIRD SPX SERIES SWING PIPE AND SB SERIES FITTINGS)	SALCO PRO-SPEC EMITTER: SLV-PST-2 SWING PIPE: SPX-100 FITTINGS: SBE-050/ SBA-050/ SB-TEE (AS REQUIRED)	2 GPH PER EMITTER/ 8 GPH PER TREE BUBBLER ASSEMBLY (4 EMITTERS PER TREE)	2/ LS-2.8
	RAINBIRD	IRRIGATION HEAD	1812-SAM-PRS-8 (Q, T, H, TT, TQ, F)	.26, .35, .52, 1.05	1/ LS-10
	RAINBIRD	IRRIGATION HEAD	1812-SAM-PRS-10(Q, T, H, TT, TQ, F)	.39, .53, .79, 1.58	1/ LS-10
	RAINBIRD	IRRIGATION HEAD	1812-SAM-PRS-12 (Q, T, H, TT, TQ, F)	.65, .87, 1.3, 2.6	1/ LS-10
	RAINBIRD	IRRIGATION HEAD	1812-SAM-PRS-15S (EST/ SST)	.61, 1.21	1/ LS-10

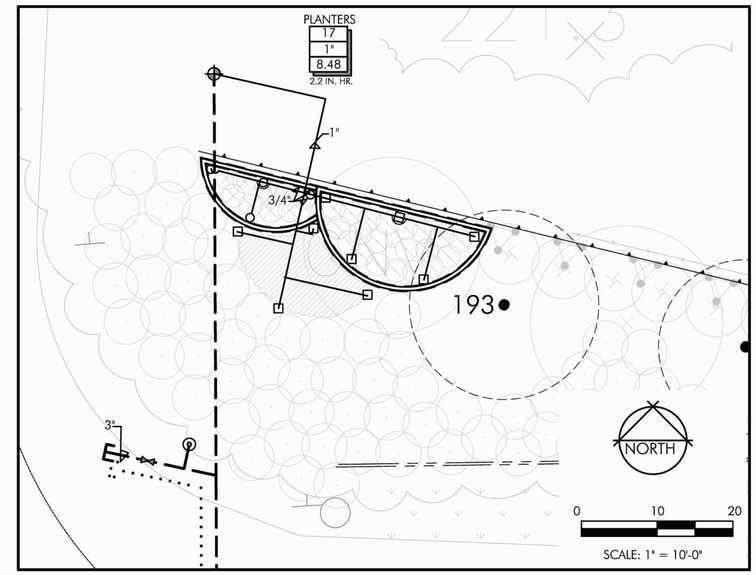

CORNER ENLARGEMENT: FIR STREET AND HIGHWAY 32 WEST

HIGHWAY 32-PHASE 1
LANDSCAPE IRRIGATION PLAN
SHEET LS-2.0

LAST REVISION 00-00-00 DATE PLOTTED => $DATE TIME PLOTTED => $TIME

REVISED BY | DATE REVISED
CALCULATED-DESIGNED BY: B. FIRTH/ JBB
CHECKED BY: B. FIRTH
SUPERVISOR: BRIAN FIRTH
CONSULTANT FUNCTIONAL SUPERVISOR
STATE OF CALIFORNIA – DEPARTMENT OF TRANSPORTATION
Caltrans

Dist	COUNTY	ROUTE	POST MILES TOTAL PROJECT	SHEET No.	TOTAL SHEETS
03	But	32	10.3/11.3	118	144

LICENSED LANDSCAPE ARCHITECT 12-22-11 DATE

DECEMBER 22, 2011
PLANS APPROVAL DATE

REGISTERED LANDSCAPE ARCHITECT BRIAN D. FIRTH #2762 EXP. 06-13 STATE OF CALIFORNIA

THE STATE OF CALIFORNIA OR ITS OFFICERS OR AGENTS SHALL NOT BE RESPONSIBLE FOR THE ACCURACY OR COMPLETENESS OF SCANNED COPIES OF THIS PLAN SHEET.

BRIAN FIRTH LANDSCAPE ARCHITECT, INC.
627 BROADWAY, SUITE 220
CHICO, CALIFORNIA 95928

CITY OF CHICO
CAPITAL PROJECT SERVICES
411 MAIN STREET
CHICO, CA 95927

SPRINKLER LEGEND

SYMBOL	MFG'R	DESCRIPTION	MODEL	FLOW (GPM)	DETAIL
	SALCO/ RAINBIRD	EMITTER/ SWINGPIPE, SHRUBS- (SALCO PRO-SPEC EMITTERS WITH RAINBIRD SPX SERIES SWING PIPE AND SB SERIES FITTINGS)	SALCO PRO-SPEC EMITTER: SLV-PST-2 SWING PIPE: SPX-100 FITTINGS: SBE-050/ SBA-050/ SB-TEE (AS REQUIRED)	2 GPH PER EMITTER/ 4 GPH PER SHRUB BUBBLER ASSEMBLY (2 EMITTERS PER SHRUB)	1/ LS-2.8
	SALCO/ RAINBIRD	EMITTER/ SWINGPIPE, VINES- (SALCO PRO-SPEC EMITTERS WITH RAINBIRD SPX SERIES SWING PIPE AND SB SERIES FITTINGS)	SALCO PRO-SPEC EMITTER: SLV-PST-2 SWING PIPE: SPX-100 FITTINGS: SBE-050/ SBA-050/ SB-TEE (AS REQUIRED)	2 GPH PER EMITTER/ 4 GPH PER VINE BUBBLER ASSEMBLY (2 EMITTERS PER VINE)	1/ LS-2.8
	SALCO/ RAINBIRD	EMITTER/ SWINGPIPE, TREES- (SALCO PRO-SPEC EMITTERS WITH RAINBIRD SPX SERIES SWING PIPE AND SB SERIES FITTINGS)	SALCO PRO-SPEC EMITTER: SLV-PST-2 SWING PIPE: SPX-100 FITTINGS: SBE-050/ SBA-050/ SB-TEE (AS REQUIRED)	2 GPH PER EMITTER/ 8 GPH PER TREE BUBBLER ASSEMBLY (4 EMITTERS PER TREE)	2/ LS-2.8
	RAINBIRD	IRRIGATION HEAD	1812-SAM-PRS-8 (Q, T, H, TT, TQ, F)	.26, .35, .52, 1.05	1/ LS-10
	RAINBIRD	IRRIGATION HEAD	1812-SAM-PRS-10(Q, T, H, TT, TQ, F)	.39, .53, .79, 1.58	1/ LS-10
	RAINBIRD	IRRIGATION HEAD	1812-SAM-PRS-12 (Q, T,, H, TT, TQ, F)	.65, .87, 1.3, 2.6	1/ LS-10
	RAINBIRD	IRRIGATION HEAD	1812-SAM-PRS-15S (EST/ SST)	.61, 1.21	1/ LS-10

IRRIGATION NOTES

1. THIS SYSTEM IS DESIGNED FOR A MAXIMUM DEMAND OF 40 GPM. AVERAGE STATIC PRESSURE IS 50 PSI AT THE POINT OF CONNECTION AND NO LESS THAN 5 PSI AT THE FARTHEST IRRIGATION EMITTER AND 30 PSI AT THE FARTHEST IRRIGATION SPRAY HEAD. CONTACT THE LANDSCAPE ARCHITECT IN THE EVENT THAT FIELD TESTED PRESSURE IS LESS THAN STATED, PRIOR TO CONSTRUCTION.
2. THE INTENT OF THIS IRRIGATION SYSTEM IS TO PROVIDE THE MINIMUM AMOUNT OF WATER REQUIRED TO SUSTAIN GOOD PLANT HEALTH. ADJUST CLOCK AS REQUIRED TO ACHIEVE THIS GOAL AS REQUIRED BY THE TIME OF YEAR. SEE SHEET LS-2.10 FOR SEASONAL IRRIGATION SCHEDULE. ADJUST AS REQUIRED FOR PLANT ESTABLISHMENT PERIOD.
3. THIS DRAWING IS DIAGRAMMATIC. IRRIGATION COMPONENTS SHOWN BENEATH PAVING, EXISTING TREE TRUNKS, OR PLANTINGS IS FOR GRAPHIC CLARITY ONLY. PLACE ALL PIPING, VALVES, AND OTHER IRRIGATION COMPONENTS WITHIN THE ADJACENT PLANTER EXCEPT WHERE PIPES CROSS PAVING. PLACE PIPING TO PREVENT CONFLICT WITH SUBSEQUENT PLANTING. REFER TO PLANTING PLAN. IRRIGATION VALVES SHALL BE GROUPED TOGETHER PER DETAIL 7, SHEET LS-2.8 AND LOCATED A MINIMUM OF 17 FEET FROM THE EDGE OF TRAVELLED WAY TO ALLOW ACCESS.
4. CONTRACTOR TO PROVIDE COMPLETE 'AS-BUILT' DRAWINGS TO CITY AT COMPLETION OF PROJECT.
5. TRENCH ALL MAIN LINES TO A DEPTH OF 18", TRENCH ALL LATERAL LINES TO A DEPTH OF 12". TRENCH ALL MAIN OR LATERAL LINES PER UTILITY PLAN AND CAL TRANS STANDARDS' WHERE CROSSING UNDER PAVEMENT .
6. INSTALL SLEEVES WHERE SHOWN ON PLAN, PRIOR TO THE PLACEMENT OF PAVING. COORDINATE WITH PAVING CONTRACTOR.
7. ALL REMOTE CONTROL VALVES, QUICK COUPLER VALVES, AIR RELIEF VALVES, AND FLUSH VALVES SHALL BE INSTALLED IN PLANTER AND IN VALVE BOXES.
8. CONTRACTOR IS RESPONSIBLE FOR PROVIDING 120 VOLT POWER TO IRRIGATION CONTROLLER. IRRIGATION CONTRACTOR IS RESPONSIBLE FOR THE COORDINATION AND HOOK-UP OF POWER TO THE CONTROLLER.
9. SEE SHEET LS-2.9 FOR SYSTEM CAPACITY DOCUMENTATION. SEE SHEET LS-2.10 FOR WATER USE DOCUMENTATION.
10. ALL PROPRIETARY SPECIFICATIONS MAY BE SUBSTITUTED WITH EQUAL OR BETTER EQUIPMENT BY ANOTHER MANUFACTURER UPON APPROVAL BY PROJECT LANDSCAPE ARCHITECT.
11. SEE DETAILS AND SPECIFICATIONS FOR ADDITIONAL INFORMATION.

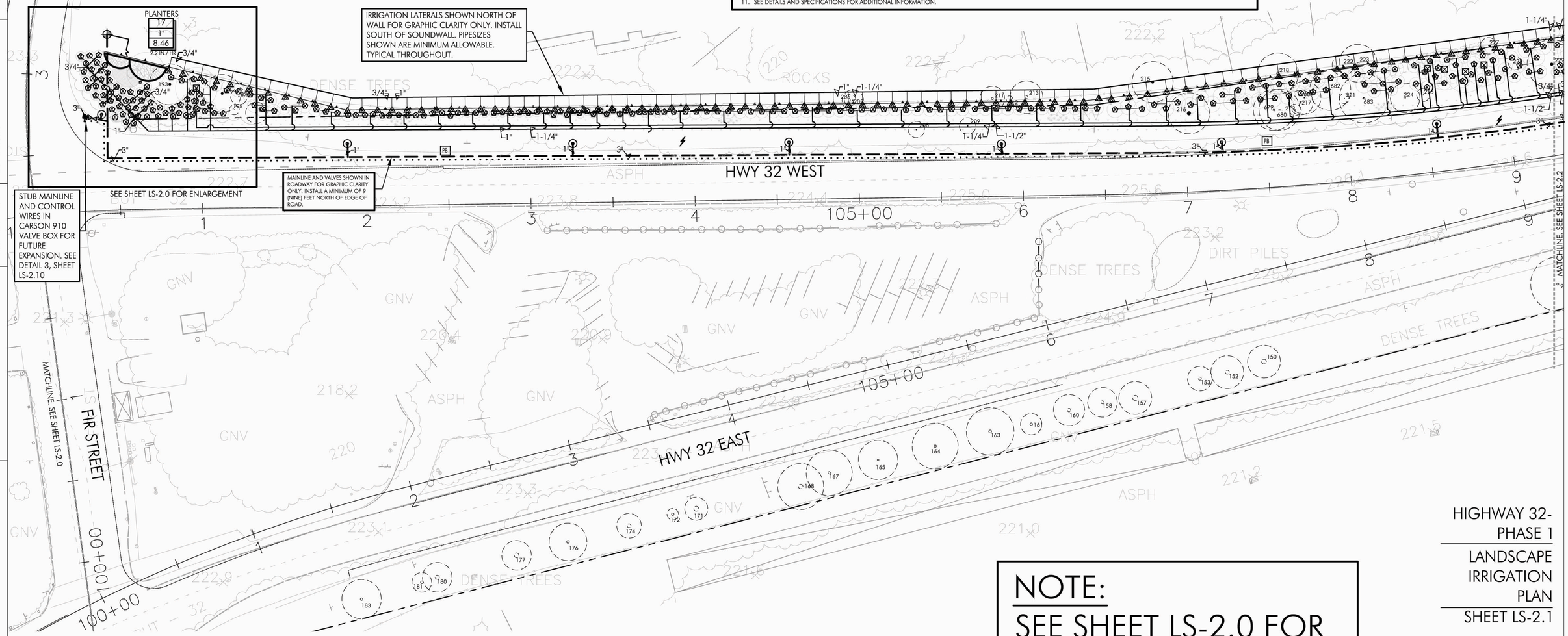

NOTE:
SEE SHEET LS-2.0 FOR IRRIGATION LEGEND

HIGHWAY 32-PHASE 1

LANDSCAPE IRRIGATION PLAN

SHEET LS-2.1

NORTH

0 30 60
SCALE: 1" = 30'-0"

REVISED BY	DATE REVISED

B. FIRTH/ JBB — CALCULATED-DESIGNED BY
B. FIRTH — CHECKED BY
BRIAN FIRTH — CONSULTANT FUNCTIONAL SUPERVISOR

STATE OF CALIFORNIA — DEPARTMENT OF TRANSPORTATION
Caltrans

LAST REVISION 00-00-00
DATE PLOTTED => $DATE
TIME PLOTTED => $TIME

Dist	COUNTY	ROUTE	POST MILES TOTAL PROJECT	SHEET No.	TOTAL SHEETS
03	But	32	10.3/11.3	119	144

12-22-11
LICENSED LANDSCAPE ARCHITECT DATE

DECEMBER 22, 2011
PLANS APPROVAL DATE

REGISTERED LANDSCAPE ARCHITECT BRIAN D. FIRTH #2752 EXP. 06-13 STATE OF CALIFORNIA

THE STATE OF CALIFORNIA OR ITS OFFICERS OR AGENTS SHALL NOT BE RESPONSIBLE FOR THE ACCURACY OR COMPLETENESS OF SCANNED COPIES OF THIS PLAN SHEET.

BRIAN FIRTH LANDSCAPE ARCHITECT, INC.
627 BROADWAY, SUITE 220
CHICO, CALIFORNIA 95928

CITY OF CHICO
CAPITAL PROJECT SERVICES
411 MAIN STREET
CHICO, CA 95927

IRRIGATION NOTES

1. THIS SYSTEM IS DESIGNED FOR A MAXIMUM DEMAND OF 40 GPM. AVERAGE STATIC PRESSURE IS 50 PSI AT THE POINT OF CONNECTION AND NO LESS THAN 5 PSI AT THE FARTHEST IRRIGATION EMITTER AND 30 PSI AT THE FARTHEST IRRIGATION SPRAY HEAD. CONTACT THE LANDSCAPE ARCHITECT IN THE EVENT THAT FIELD TESTED PRESSURE IS LESS THAN STATED, PRIOR TO CONSTRUCTION.
2. THE INTENT OF THIS IRRIGATION SYSTEM IS TO PROVIDE THE MINIMUM AMOUNT OF WATER REQUIRED TO SUSTAIN GOOD PLANT HEALTH. ADJUST CLOCK AS REQUIRED TO ACHIEVE THIS GOAL AS REQUIRED BY THE TIME OF YEAR. SEE SHEET LS-2.10 FOR SEASONAL IRRIGATION SCHEDULE. ADJUST AS REQUIRED FOR PLANT ESTABLISHMENT PERIOD.
3. THIS DRAWING IS DIAGRAMMATIC. IRRIGATION COMPONENTS SHOWN BENEATH PAVING, EXISTING TREE TRUNKS, OR PLANTINGS IS FOR GRAPHIC CLARITY ONLY. PLACE ALL PIPING, VALVES, AND OTHER IRRIGATION COMPONENTS WITHIN THE ADJACENT PLANTER EXCEPT WHERE PIPES CROSS PAVING. PLACE PIPING TO PREVENT CONFLICT WITH SUBSEQUENT PLANTING. REFER TO PLANTING PLAN. IRRIGATION VALVES SHALL BE GROUPED TOGETHER PER DETAIL 7, SHEET LS-2.8 AND LOCATED A MINIMUM OF 17 FEET FROM THE EDGE OF TRAVELLED WAY TO ALLOW ACCESS.
4. CONTRACTOR TO PROVIDE COMPLETE 'AS-BUILT' DRAWINGS TO CITY AT COMPLETION OF PROJECT.
5. TRENCH ALL MAIN LINES TO A DEPTH OF 18", TRENCH ALL LATERAL LINES TO A DEPTH OF 12". TRENCH ALL MAIN OR LATERAL LINES PER UTILITY PLAN AND CAL TRANS STANDARDS' WHERE CROSSING UNDER PAVEMENT .
6. INSTALL SLEEVES WHERE SHOWN ON PLAN, PRIOR TO THE PLACEMENT OF PAVING. COORDINATE WITH PAVING CONTRACTOR.
7. ALL REMOTE CONTROL VALVES, QUICK COUPLER VALVES, AIR RELIEF VALVES, AND FLUSH VALVES SHALL BE INSTALLED IN PLANTER AND IN VALVE BOXES.
8. CONTRACTOR IS RESPONSIBLE FOR PROVIDING 120 VOLT POWER TO IRRIGATION CONTROLLER. IRRIGATION CONTRACTOR IS RESPONSIBLE FOR THE COORDINATION AND HOOK-UP OF POWER TO THE CONTROLLER.
9. SEE SHEET LS-2.9 FOR SYSTEM CAPACITY DOCUMENTATION. SEE SHEET LS-2.10 FOR WATER USE DOCUMENTATION.
10. ALL PROPRIETARY SPECIFICATIONS MAY BE SUBSTITUTED WITH EQUAL OR BETTER EQUIPMENT BY ANOTHER MANUFACTURER UPON APPROVAL BY PROJECT LANDSCAPE ARCHITECT.
11. SEE DETAILS AND SPECIFICATIONS FOR ADDITIONAL INFORMATION.

SPRINKLER LEGEND

SYMBOL	MFGR	DESCRIPTION	MODEL	FLOW (GPM)	DETAIL
	SALCO/ RAINBIRD	EMITTER/ SWINGPIPE, SHRUBS- (SALCO PRO-SPEC EMITTERS WITH RAINBIRD SPX SERIES SWING PIPE AND SB SERIES FITTINGS)	SALCO PRO-SPEC EMITTER: SLV-PST-2 SWING PIPE: SPX-100 FITTINGS: SBE-050/ SBA-050/ SB-TEE (AS REQUIRED)	2 GPH PER EMITTER/ 4 GPH PER SHRUB BUBBLER ASSEMBLY (2 EMITTERS PER SHRUB)	1/ LS-2.8
	SALCO/ RAINBIRD	EMITTER/ SWINGPIPE, VINES- (SALCO PRO-SPEC EMITTERS WITH RAINBIRD SPX SERIES SWING PIPE AND SB SERIES FITTINGS)	SALCO PRO-SPEC EMITTER: SLV-PST-2 SWING PIPE: SPX-100 FITTINGS: SBE-050/ SBA-050/ SB-TEE (AS REQUIRED)	2 GPH PER EMITTER/ 4 GPH PER VINE BUBBLER ASSEMBLY (2 EMITTERS PER VINE)	1/ LS-2.8
	SALCO/ RAINBIRD	EMITTER/ SWINGPIPE, TREES- (SALCO PRO-SPEC EMITTERS WITH RAINBIRD SPX SERIES SWING PIPE AND SB SERIES FITTINGS)	SALCO PRO-SPEC EMITTER: SLV-PST-2 SWING PIPE: SPX-100 FITTINGS: SBE-050/ SBA-050/ SB-TEE (AS REQUIRED)	2 GPH PER EMITTER/ 8 GPH PER TREE BUBBLER ASSEMBLY (4 EMITTERS PER TREE)	2/ LS-2.8
	RAINBIRD	IRRIGATION HEAD	1812-SAM-PRS-8 (Q, T, H, TT, TQ, F)	.26, .35, .52, 1.05	1/LS-10
	RAINBIRD	IRRIGATION HEAD	1812-SAM-PRS-10(Q, T, H, TT, TQ, F)	.39, .53, .79, 1.58	1/LS-10
	RAINBIRD	IRRIGATION HEAD	1812-SAM-PRS-12 (Q, T,, H, TT, TQ, F)	.65, .87, 1.3, 2.6	1/LS-10
	RAINBIRD	IRRIGATION HEAD	1812-SAM-PRS-15S (EST/ SST)	.61, 1.21	1/LS-10

NOTE:
SEE SHEET LS-2.0 FOR IRRIGATION LEGEND

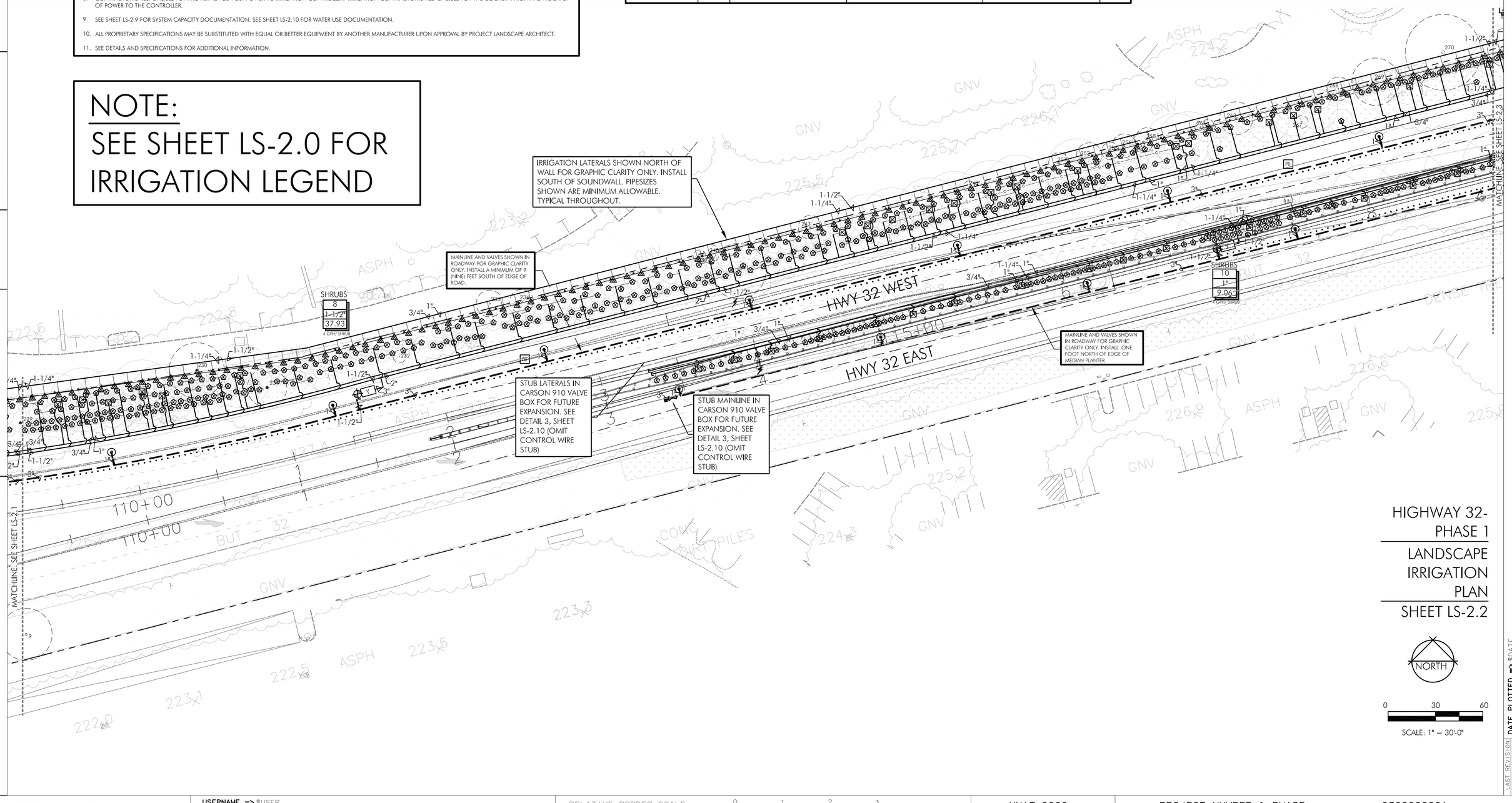

HIGHWAY 32-
PHASE 1

LANDSCAPE
IRRIGATION
PLAN

SHEET LS-2.2

NORTH

0 30 60
SCALE: 1" = 30'-0"

STATE OF CALIFORNIA – DEPARTMENT OF TRANSPORTATION
Caltrans
CONSULTANT FUNCTIONAL SUPERVISOR: BRIAN FIRTH
CALCULATED-DESIGNED BY: B. FIRTH/ JBB
CHECKED BY: B. FIRTH
REVISED BY
DATE REVISED

LAST REVISION 00-00-00
DATE PLOTTED => $DATE
TIME PLOTTED => $TIME

Dist	COUNTY	ROUTE	POST MILES TOTAL PROJECT	SHEET No.	TOTAL SHEETS
03	But	32	10.3/11.3	120	144

LICENSED LANDSCAPE ARCHITECT 12-22-11 DATE

DECEMBER 22, 2011
PLANS APPROVAL DATE

REGISTERED LANDSCAPE ARCHITECT BRIAN D. FIRTH #2752 STATE OF CALIFORNIA EXP. 06-13

THE STATE OF CALIFORNIA OR ITS OFFICERS OR AGENTS SHALL NOT BE RESPONSIBLE FOR THE ACCURACY OR COMPLETENESS OF SCANNED COPIES OF THIS PLAN SHEET.

BRIAN FIRTH LANDSCAPE ARCHITECT, INC.
627 BROADWAY, SUITE 220
CHICO, CALIFORNIA 95928

CITY OF CHICO
CAPITAL PROJECT SERVICES
411 MAIN STREET
CHICO, CA 95927

IRRIGATION NOTES

1. THIS SYSTEM IS DESIGNED FOR A MAXIMUM DEMAND OF 40 GPM. AVERAGE STATIC PRESSURE IS 50 PSI AT THE POINT OF CONNECTION AND NO LESS THAN 5 PSI AT THE FARTHEST IRRIGATION EMITTER AND 30 PSI AT THE FARTHEST IRRIGATION SPRAY HEAD. CONTACT THE LANDSCAPE ARCHITECT IN THE EVENT THAT FIELD TESTED PRESSURE IS LESS THAN STATED, PRIOR TO CONSTRUCTION.
2. THE INTENT OF THIS IRRIGATION SYSTEM IS TO PROVIDE THE MINIMUM AMOUNT OF WATER REQUIRED TO SUSTAIN GOOD PLANT HEALTH. ADJUST CLOCK AS REQUIRED TO ACHIEVE THIS GOAL AS REQUIRED BY THE TIME OF YEAR. SEE SHEET LS-2.10 FOR SEASONAL IRRIGATION SCHEDULE. ADJUST AS REQUIRED FOR PLANT ESTABLISHMENT PERIOD.
3. THIS DRAWING IS DIAGRAMMATIC. IRRIGATION COMPONENTS SHOWN BENEATH PAVING, EXISTING TREE TRUNKS, OR PLANTINGS IS FOR GRAPHIC CLARITY ONLY. PLACE ALL PIPING, VALVES, AND OTHER IRRIGATION COMPONENTS WITHIN THE ADJACENT PLANTER EXCEPT WHERE PIPES CROSS PAVING. PLACE PIPING TO PREVENT CONFLICT WITH SUBSEQUENT PLANTING. REFER TO PLANTING PLAN. IRRIGATION VALVES SHALL BE GROUPED TOGETHER PER DETAIL 7, SHEET LS-2.8 AND LOCATED A MINIMUM OF 17 FEET FROM THE EDGE OF TRAVELLED WAY TO ALLOW ACCESS.
4. CONTRACTOR TO PROVIDE COMPLETE 'AS-BUILT' DRAWINGS TO CITY AT COMPLETION OF PROJECT.
5. TRENCH ALL MAIN LINES TO A DEPTH OF 18", TRENCH ALL LATERAL LINES TO A DEPTH OF 12". TRENCH ALL MAIN OR LATERAL LINES PER UTILITY PLAN AND CAL TRANS STANDARDS' WHERE CROSSING UNDER PAVEMENT .
6. INSTALL SLEEVES WHERE SHOWN ON PLAN, PRIOR TO THE PLACEMENT OF PAVING. COORDINATE WITH PAVING CONTRACTOR.
7. ALL REMOTE CONTROL VALVES, QUICK COUPLER VALVES, AIR RELIEF VALVES, AND FLUSH VALVES SHALL BE INSTALLED IN PLANTER AND IN VALVE BOXES.
8. CONTRACTOR IS RESPONSIBLE FOR PROVIDING 120 VOLT POWER TO IRRIGATION CONTROLLER. IRRIGATION CONTRACTOR IS RESPONSIBLE FOR THE COORDINATION AND HOOK-UP OF POWER TO THE CONTROLLER.
9. SEE SHEET LS-2.9 FOR SYSTEM CAPACITY DOCUMENTATION. SEE SHEET LS-2.10 FOR WATER USE DOCUMENTATION.
10. ALL PROPRIETARY SPECIFICATIONS MAY BE SUBSTITUTED WITH EQUAL OR BETTER EQUIPMENT BY ANOTHER MANUFACTURER UPON APPROVAL BY PROJECT LANDSCAPE ARCHITECT.
11. SEE DETAILS AND SPECIFICATIONS FOR ADDITIONAL INFORMATION.

SPRINKLER LEGEND

SYMBOL	MFG'R	DESCRIPTION	MODEL	FLOW (GPM)	DETAIL
	SALCO/ RAINBIRD	EMITTER/ SWINGPIPE, SHRUBS- (SALCO PRO-SPEC EMITTERS WITH RAINBIRD SPX SERIES SWING PIPE AND SB SERIES FITTINGS)	SALCO PRO-SPEC EMITTER: SLV-PST-2 SWING PIPE: SPX-100 FITTINGS: SBE-050/ SBA-050/ SB-TEE (AS REQUIRED)	2 GPH PER EMITTER/ 4 GPH PER SHRUB BUBBLER ASSEMBLY (2 EMITTERS PER SHRUB)	1/ LS-2.8
	SALCO/ RAINBIRD	EMITTER/ SWINGPIPE, VINES- (SALCO PRO-SPEC EMITTERS WITH RAINBIRD SPX SERIES SWING PIPE AND SB SERIES FITTINGS)	SALCO PRO-SPEC EMITTER: SLV-PST-2 SWING PIPE: SPX-100 FITTINGS: SBE-050/ SBA-050/ SB-TEE (AS REQUIRED)	2 GPH PER EMITTER/ 4 GPH PER VINE BUBBLER ASSEMBLY (2 EMITTERS PER VINE)	1/ LS-2.8
	SALCO/ RAINBIRD	EMITTER/ SWINGPIPE, TREES- (SALCO PRO-SPEC EMITTERS WITH RAINBIRD SPX SERIES SWING PIPE AND SB SERIES FITTINGS)	SALCO PRO-SPEC EMITTER: SLV-PST-2 SWING PIPE: SPX-100 FITTINGS: SBE-050/ SBA-050/ SB-TEE (AS REQUIRED)	2 GPH PER EMITTER/ 8 GPH PER TREE BUBBLER ASSEMBLY (4 EMITTERS PER TREE)	2/ LS-2.8
	RAINBIRD	IRRIGATION HEAD	1812-SAM-PRS-8 (Q, T, H, TT, TQ, F)	.26, .35, .52, 1.05	1/ LS-10
	RAINBIRD	IRRIGATION HEAD	1812-SAM-PRS-10(Q, T, H, TT, TQ, F)	.39, .53, .79, 1.58	1/ LS-10
	RAINBIRD	IRRIGATION HEAD	1812-SAM-PRS-12 (Q, T,, H, TT, TQ, F)	.65, .87, 1.3, 2.6	1/ LS-10
	RAINBIRD	IRRIGATION HEAD	1812-SAM-PRS-15S (EST/ SST)	.61, 1.21	1/ LS-10

NOTE:
SEE SHEET LS-2.0 FOR IRRIGATION LEGEND

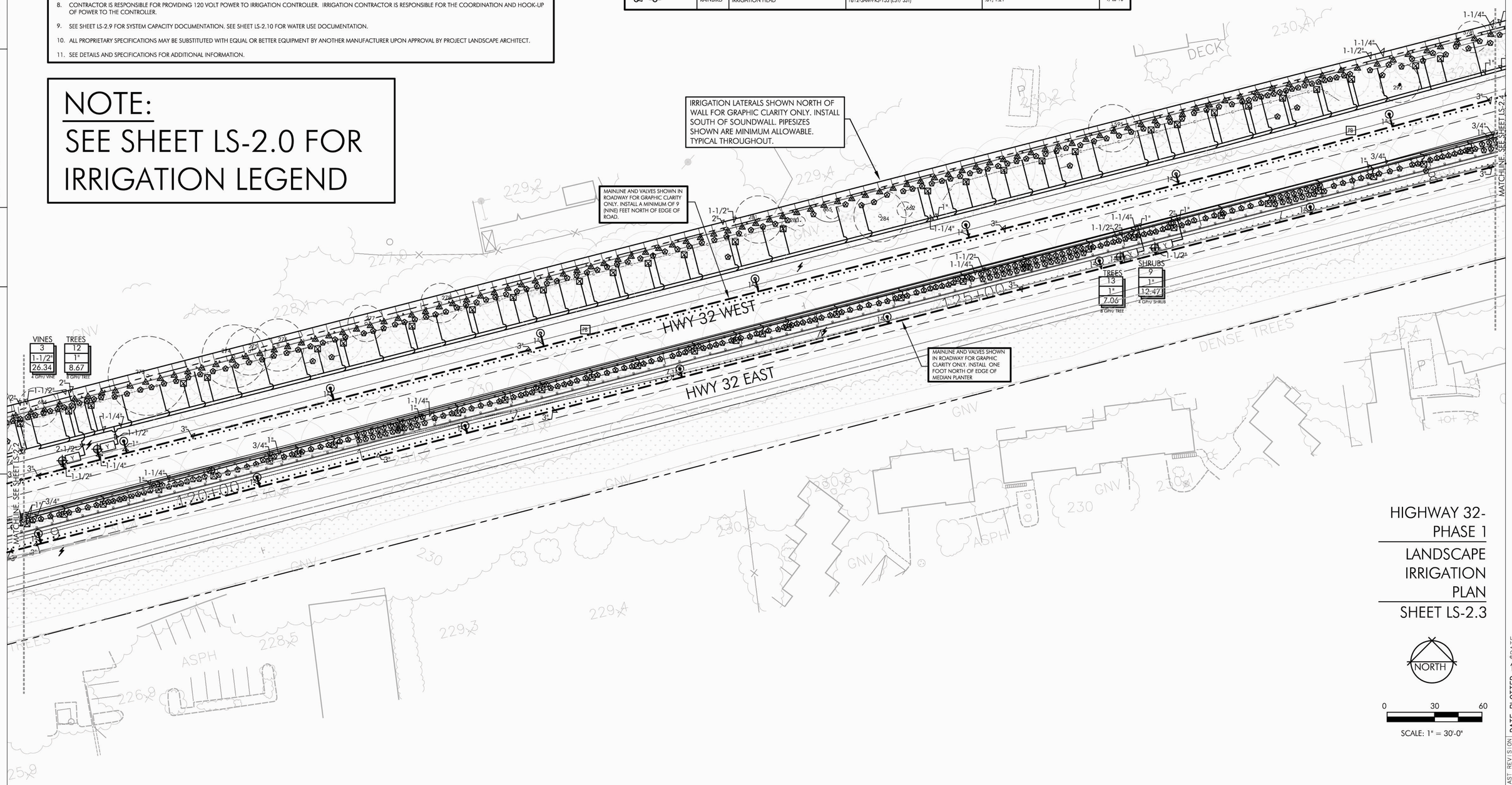

HIGHWAY 32-
PHASE 1
LANDSCAPE
IRRIGATION
PLAN
SHEET LS-2.3

REVISED BY	DATE REVISED

CALCULATED-DESIGNED BY: B. FIRTH/ JBB
CHECKED BY: B. FIRTH
SUPERVISOR: BRIAN FIRTH
CONSULTANT FUNCTIONAL SUPERVISOR

STATE OF CALIFORNIA – DEPARTMENT OF TRANSPORTATION
Caltrans

LAST REVISION 00-00-00
DATE PLOTTED => $DATE
TIME PLOTTED => $TIME

Dist	COUNTY	ROUTE	POST MILES TOTAL PROJECT	SHEET No.	TOTAL SHEETS
03	But	32	10.3/11.3	121	144

12-22-11
LICENSED LANDSCAPE ARCHITECT DATE

DECEMBER 22, 2011
PLANS APPROVAL DATE

REGISTERED LANDSCAPE ARCHITECT BRIAN D. FIRTH #2752 EXP. 06-13 STATE OF CALIFORNIA

THE STATE OF CALIFORNIA OR ITS OFFICERS OR AGENTS SHALL NOT BE RESPONSIBLE FOR THE ACCURACY OR COMPLETENESS OF SCANNED COPIES OF THIS PLAN SHEET.

BRIAN FIRTH LANDSCAPE ARCHITECT, INC.
627 BROADWAY, SUITE 220
CHICO, CALIFORNIA 95928

CITY OF CHICO
CAPITAL PROJECT SERVICES
411 MAIN STREET
CHICO, CA 95927

IRRIGATION NOTES

1. THIS SYSTEM IS DESIGNED FOR A MAXIMUM DEMAND OF 40 GPM. AVERAGE STATIC PRESSURE IS 50 PSI AT THE POINT OF CONNECTION AND NO LESS THAN 5 PSI AT THE FARTHEST IRRIGATION EMITTER AND 30 PSI AT THE FARTHEST IRRIGATION SPRAY HEAD. CONTACT THE LANDSCAPE ARCHITECT IN THE EVENT THAT FIELD TESTED PRESSURE IS LESS THAN STATED, PRIOR TO CONSTRUCTION.
2. THE INTENT OF THIS IRRIGATION SYSTEM IS TO PROVIDE THE MINIMUM AMOUNT OF WATER REQUIRED TO SUSTAIN GOOD PLANT HEALTH. ADJUST CLOCK AS REQUIRED TO ACHIEVE THIS GOAL AS REQUIRED BY THE TIME OF YEAR. SEE SHEET LS-2.10 FOR SEASONAL IRRIGATION SCHEDULE. ADJUST AS REQUIRED FOR PLANT ESTABLISHMENT PERIOD.
3. THIS DRAWING IS DIAGRAMMATIC. IRRIGATION COMPONENTS SHOWN BENEATH PAVING, EXISTING TREE TRUNKS, OR PLANTINGS IS FOR GRAPHIC CLARITY ONLY. PLACE ALL PIPING, VALVES, AND OTHER IRRIGATION COMPONENTS WITHIN THE ADJACENT PLANTER EXCEPT WHERE PIPES CROSS PAVING. PLACE PIPING TO PREVENT CONFLICT WITH SUBSEQUENT PLANTING. REFER TO PLANTING PLAN. IRRIGATION VALVES SHALL BE GROUPED TOGETHER PER DETAIL 7, SHEET LS-2.8 AND LOCATED A MINIMUM OF 17 FEET FROM THE EDGE OF TRAVELLED WAY TO ALLOW ACCESS.
4. CONTRACTOR TO PROVIDE COMPLETE 'AS-BUILT' DRAWINGS TO CITY AT COMPLETION OF PROJECT.
5. TRENCH ALL MAIN LINES TO A DEPTH OF 18", TRENCH ALL LATERAL LINES TO A DEPTH OF 12". TRENCH ALL MAIN OR LATERAL LINES PER UTILITY PLAN AND CAL TRANS STANDARDS* WHERE CROSSING UNDER PAVEMENT .
6. INSTALL SLEEVES WHERE SHOWN ON PLAN, PRIOR TO THE PLACEMENT OF PAVING. COORDINATE WITH PAVING CONTRACTOR.
7. ALL REMOTE CONTROL VALVES, QUICK COUPLER VALVES, AIR RELIEF VALVES, AND FLUSH VALVES SHALL BE INSTALLED IN PLANTER AND IN VALVE BOXES.
8. CONTRACTOR IS RESPONSIBLE FOR PROVIDING 120 VOLT POWER TO IRRIGATION CONTROLLER. IRRIGATION CONTRACTOR IS RESPONSIBLE FOR THE COORDINATION AND HOOK-UP OF POWER TO THE CONTROLLER.
9. SEE SHEET LS-2.9 FOR SYSTEM CAPACITY DOCUMENTATION. SEE SHEET LS-2.10 FOR WATER USE DOCUMENTATION.
10. ALL PROPRIETARY SPECIFICATIONS MAY BE SUBSTITUTED WITH EQUAL OR BETTER EQUIPMENT BY ANOTHER MANUFACTURER UPON APPROVAL BY PROJECT LANDSCAPE ARCHITECT.
11. SEE DETAILS AND SPECIFICATIONS FOR ADDITIONAL INFORMATION.

SPRINKLER LEGEND

SYMBOL	MFG'R	DESCRIPTION	MODEL	FLOW (GPM)	DETAIL
	SALCO/ RAINBIRD	EMITTER/ SWINGPIPE, SHRUBS- (SALCO PRO-SPEC EMITTERS WITH RAINBIRD SPX SERIES SWING PIPE AND SB SERIES FITTINGS)	SALCO PRO-SPEC EMITTER: SLV-PST-2 SWING PIPE: SPX-100 FITTINGS: SBE-050/ SBA-050/ SB-TEE (AS REQUIRED)	2 GPH PER EMITTER/ 4 GPH PER SHRUB BUBBLER ASSEMBLY (2 EMITTERS PER SHRUB)	1/ LS-2.8
	SALCO/ RAINBIRD	EMITTER/ SWINGPIPE, VINES- (SALCO PRO-SPEC EMITTERS WITH RAINBIRD SPX SERIES SWING PIPE AND SB SERIES FITTINGS)	SALCO PRO-SPEC EMITTER: SLV-PST-2 SWING PIPE: SPX-100 FITTINGS: SBE-050/ SBA-050/ SB-TEE (AS REQUIRED)	2 GPH PER EMITTER/ 4 GPH PER VINE BUBBLER ASSEMBLY (2 EMITTERS PER VINE)	1/ LS-2.8
	SALCO/ RAINBIRD	EMITTER/ SWINGPIPE, TREES- (SALCO PRO-SPEC EMITTERS WITH RAINBIRD SPX SERIES SWING PIPE AND SB SERIES FITTINGS)	SALCO PRO-SPEC EMITTER: SLV-PST-2 SWING PIPE: SPX-100 FITTINGS: SBE-050/ SBA-050/ SB-TEE (AS REQUIRED)	2 GPH PER EMITTER/ 8 GPH PER TREE BUBBLER ASSEMBLY (4 EMITTERS PER TREE)	2/ LS-2.8
	RAINBIRD	IRRIGATION HEAD	1812-SAM-PRS-8 (Q, T, H, TT, TQ, F)	.26, .35, .52, 1.05	1/ LS-10
	RAINBIRD	IRRIGATION HEAD	1812-SAM-PRS-10(Q, T, H, TT, TQ, F)	.39, .53, .79, 1.58	1/ LS-10
	RAINBIRD	IRRIGATION HEAD	1812-SAM-PRS-12 (Q, T,, H, TT, TQ, F)	.65, .87, 1.3, 2.6	1/ LS-10
	RAINBIRD	IRRIGATION HEAD	1812-SAM-PRS-15S (EST/ SST)	.61, 1.21	1/ LS-10

NOTE:
SEE SHEET LS-2.0 FOR IRRIGATION LEGEND

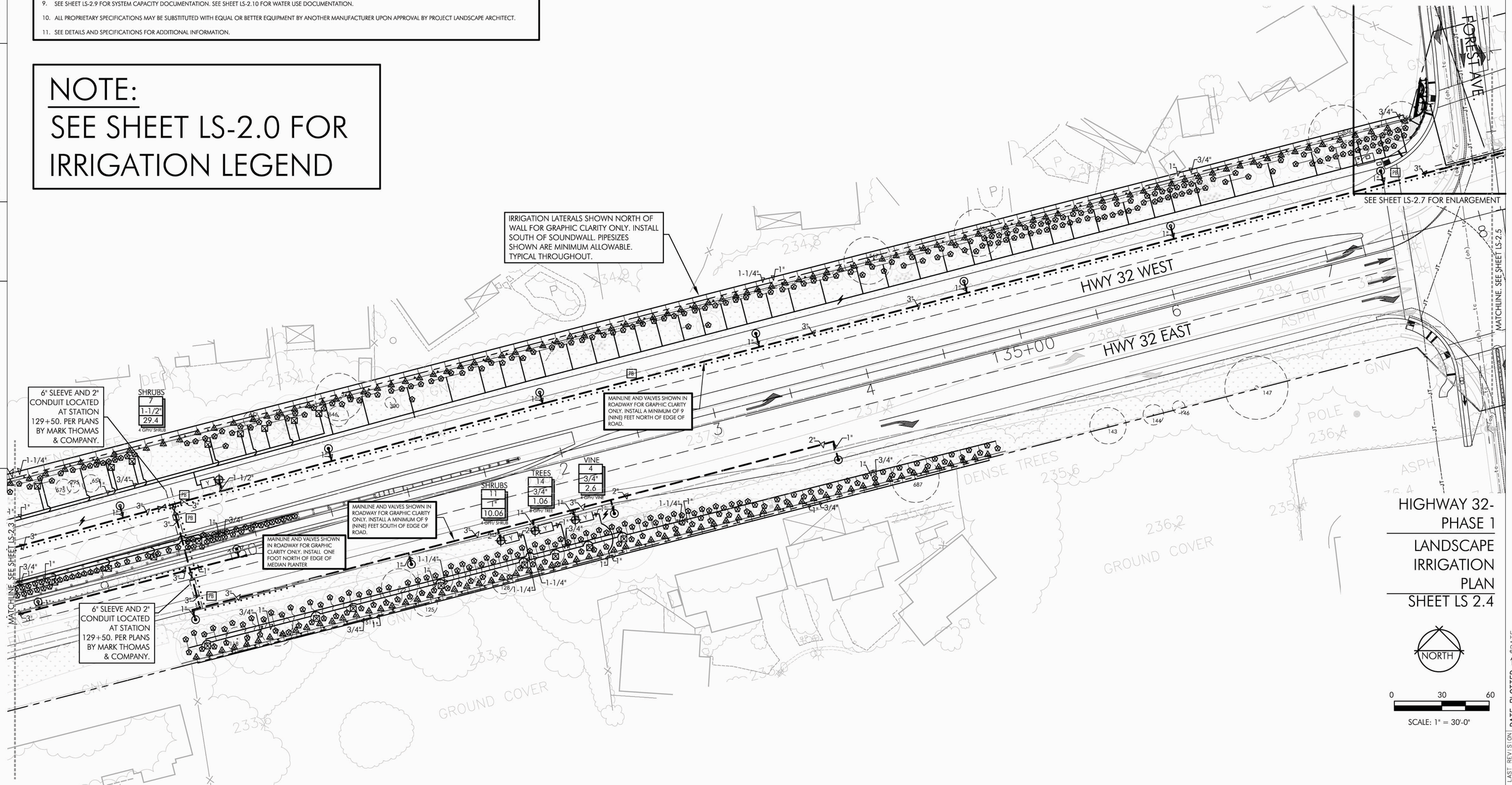

HIGHWAY 32-PHASE 1

LANDSCAPE IRRIGATION PLAN

SHEET LS 2.4

NORTH

0 30 60

SCALE: 1" = 30'-0"

REVISED BY	DATE REVISED
B. FIRTH/ JBB	
B. FIRTH	

CALCULATED-DESIGNED BY
CHECKED BY

CONSULTANT FUNCTIONAL SUPERVISOR
BRIAN FIRTH

STATE OF CALIFORNIA – DEPARTMENT OF TRANSPORTATION
Caltrans

LAST REVISION 00-00-00
DATE PLOTTED => $DATE
TIME PLOTTED => $TIME

Dist	COUNTY	ROUTE	POST MILES TOTAL PROJECT	SHEET No.	TOTAL SHEETS
03	But	32	10.3/11.3	122	144

12-22-11
LICENSED LANDSCAPE ARCHITECT DATE

DECEMBER 22, 2011
PLANS APPROVAL DATE

REGISTERED LANDSCAPE ARCHITECT
BRIAN D. FIRTH #2752
SIGNATURE
EXP. 06-13
DATE
STATE OF CALIFORNIA

THE STATE OF CALIFORNIA OR ITS OFFICERS OR AGENTS SHALL NOT BE RESPONSIBLE FOR THE ACCURACY OR COMPLETENESS OF SCANNED COPIES OF THIS PLAN SHEET.

BRIAN FIRTH LANDSCAPE ARCHITECT, INC.
627 BROADWAY, SUITE 220
CHICO, CALIFORNIA 95928

CITY OF CHICO
CAPITAL PROJECT SERVICES
411 MAIN STREET
CHICO, CA 95927

IRRIGATION NOTES

1. THIS SYSTEM IS DESIGNED FOR A MAXIMUM DEMAND OF 40 GPM. AVERAGE STATIC PRESSURE IS 50 PSI AT THE POINT OF CONNECTION AND NO LESS THAN 5 PSI AT THE FARTHEST IRRIGATION EMITTER AND 30 PSI AT THE FARTHEST IRRIGATION SPRAY HEAD. CONTACT THE LANDSCAPE ARCHITECT IN THE EVENT THAT FIELD TESTED PRESSURE IS LESS THAN STATED, PRIOR TO CONSTRUCTION.
2. THE INTENT OF THIS IRRIGATION SYSTEM IS TO PROVIDE THE MINIMUM AMOUNT OF WATER REQUIRED TO SUSTAIN GOOD PLANT HEALTH. ADJUST CLOCK AS REQUIRED TO ACHIEVE THIS GOAL AS REQUIRED BY THE TIME OF YEAR. SEE SHEET LS-2.10 FOR SEASONAL IRRIGATION SCHEDULE. ADJUST AS REQUIRED FOR PLANT ESTABLISHMENT PERIOD.
3. THIS DRAWING IS DIAGRAMMATIC. IRRIGATION COMPONENTS SHOWN BENEATH PAVING, EXISTING TREE TRUNKS, OR PLANTINGS IS FOR GRAPHIC CLARITY ONLY. PLACE ALL PIPING, VALVES, AND OTHER IRRIGATION COMPONENTS WITHIN THE ADJACENT PLANTER EXCEPT WHERE PIPES CROSS PAVING. PLACE PIPING TO PREVENT CONFLICT WITH SUBSEQUENT PLANTING. REFER TO PLANTING PLAN. IRRIGATION VALVES SHALL BE GROUPED TOGETHER PER DETAIL 7, SHEET LS-2.8 AND LOCATED A MINIMUM OF 17 FEET FROM THE EDGE OF TRAVELLED WAY TO ALLOW ACCESS.
4. CONTRACTOR TO PROVIDE COMPLETE 'AS-BUILT' DRAWINGS TO CITY AT COMPLETION OF PROJECT.
5. TRENCH ALL MAIN LINES TO A DEPTH OF 18", TRENCH ALL LATERAL LINES TO A DEPTH OF 12". TRENCH ALL MAIN OR LATERAL LINES PER UTILITY PLAN AND CAL TRANS STANDARDS' WHERE CROSSING UNDER PAVEMENT .
6. INSTALL SLEEVES WHERE SHOWN ON PLAN, PRIOR TO THE PLACEMENT OF PAVING. COORDINATE WITH PAVING CONTRACTOR.
7. ALL REMOTE CONTROL VALVES, QUICK COUPLER VALVES, AIR RELIEF VALVES, AND FLUSH VALVES SHALL BE INSTALLED IN PLANTER AND IN VALVE BOXES.
8. CONTRACTOR IS RESPONSIBLE FOR PROVIDING 120 VOLT POWER TO IRRIGATION CONTROLLER. IRRIGATION CONTRACTOR IS RESPONSIBLE FOR THE COORDINATION AND HOOK-UP OF POWER TO THE CONTROLLER.
9. SEE SHEET LS-2.9 FOR SYSTEM CAPACITY DOCUMENTATION. SEE SHEET LS-2.10 FOR WATER USE DOCUMENTATION.
10. ALL PROPRIETARY SPECIFICATIONS MAY BE SUBSTITUTED WITH EQUAL OR BETTER EQUIPMENT BY ANOTHER MANUFACTURER UPON APPROVAL BY PROJECT LANDSCAPE ARCHITECT.
11. SEE DETAILS AND SPECIFICATIONS FOR ADDITIONAL INFORMATION.

SPRINKLER LEGEND

SYMBOL	MFG'R	DESCRIPTION	MODEL	FLOW (GPM)	DETAIL
	SALCO/ RAINBIRD	EMITTER/ SWINGPIPE, SHRUBS- (SALCO PRO-SPEC EMITTERS WITH RAINBIRD SPX SERIES SWING PIPE AND SB SERIES FITTINGS)	SALCO PRO-SPEC EMITTER: SLV-PST-2 SWING PIPE: SPX-100 FITTINGS: SBE-050/ SBA-050/ SB-TEE (AS REQUIRED)	2 GPH PER EMITTER/ 4 GPH PER SHRUB BUBBLER ASSEMBLY (2 EMITTERS PER SHRUB)	1/ LS-2.8
	SALCO/ RAINBIRD	EMITTER/ SWINGPIPE, VINES- (SALCO PRO-SPEC EMITTERS WITH RAINBIRD SPX SERIES SWING PIPE AND SB SERIES FITTINGS)	SALCO PRO-SPEC EMITTER: SLV-PST-2 SWING PIPE: SPX-100 FITTINGS: SBE-050/ SBA-050/ SB-TEE (AS REQUIRED)	2 GPH PER EMITTER/ 4 GPH PER VINE BUBBLER ASSEMBLY (2 EMITTERS PER VINE)	1/ LS-2.8
	SALCO/ RAINBIRD	EMITTER/ SWINGPIPE, TREES- (SALCO PRO-SPEC EMITTERS WITH RAINBIRD SPX SERIES SWING PIPE AND SB SERIES FITTINGS)	SALCO PRO-SPEC EMITTER: SLV-PST-2 SWING PIPE: SPX-100 FITTINGS: SBE-050/ SBA-050/ SB-TEE (AS REQUIRED)	2 GPH PER EMITTER/ 8 GPH PER TREE BUBBLER ASSEMBLY (4 EMITTERS PER TREE)	2/ LS-2.8
	RAINBIRD	IRRIGATION HEAD	1812-SAM-PRS-8 (Q, T, H, TT, TQ, F)	.26, .35, .52, 1.05	1/ LS-10
	RAINBIRD	IRRIGATION HEAD	1812-SAM-PRS-10(Q, T, H, TT, TQ, F)	.39, .53, .79, 1.58	1/ LS-10
	RAINBIRD	IRRIGATION HEAD	1812-SAM-PRS-12 (Q, T,, H, TT, TQ, F)	.65, .87, 1.3, 2.6	1/ LS-10
	RAINBIRD	IRRIGATION HEAD	1812-SAM-PRS-1SS (EST/ SST)	.61, 1.21	1/ LS-10

NOTE:
SEE SHEET LS-2.0 FOR IRRIGATION LEGEND

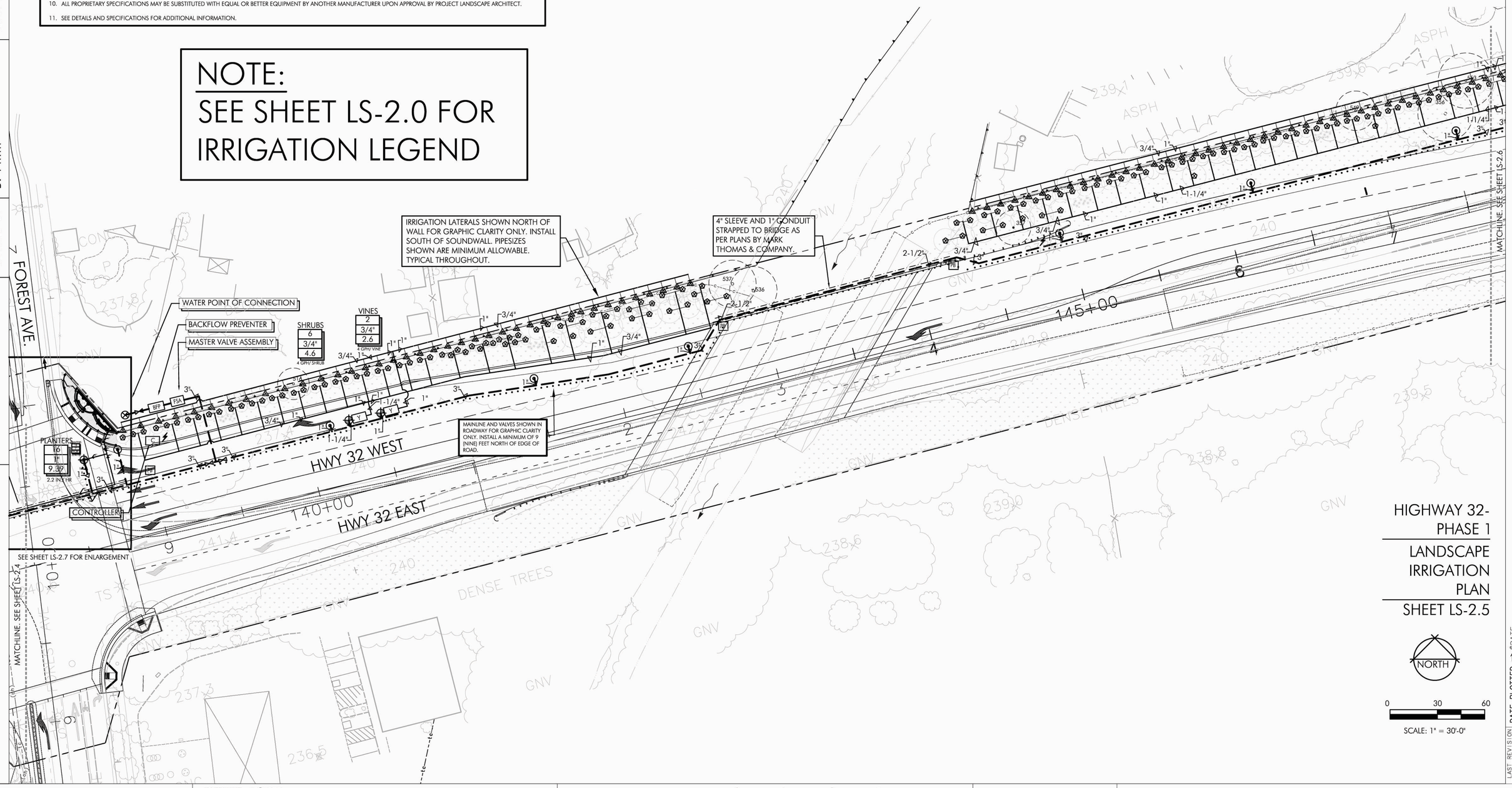

HIGHWAY 32-
PHASE 1

LANDSCAPE
IRRIGATION
PLAN

SHEET LS-2.5

NORTH

0 30 60
SCALE: 1" = 30'-0"

REVISED BY	DATE REVISED

CALCULATED-DESIGNED BY: B. FIRTH/ JBB
CHECKED BY: B. FIRTH
SUPERVISOR: BRIAN FIRTH
CONSULTANT FUNCTIONAL SUPERVISOR
STATE OF CALIFORNIA — DEPARTMENT OF TRANSPORTATION
Caltrans

LAST REVISION 00-00-00
DATE PLOTTED => $DATE
TIME PLOTTED => $TIME

Dist	COUNTY	ROUTE	POST MILES TOTAL PROJECT	SHEET No.	TOTAL SHEETS
03	But	32	10.3/11.3	123	144

12-22-11
LICENSED LANDSCAPE ARCHITECT DATE

DECEMBER 22, 2011
PLANS APPROVAL DATE

REGISTERED LANDSCAPE ARCHITECT BRIAN D. FIRTH #2752 EXP. 06-13 STATE OF CALIFORNIA

THE STATE OF CALIFORNIA OR ITS OFFICERS OR AGENTS SHALL NOT BE RESPONSIBLE FOR THE ACCURACY OR COMPLETENESS OF SCANNED COPIES OF THIS PLAN SHEET.

BRIAN FIRTH LANDSCAPE ARCHITECT, INC.
627 BROADWAY, SUITE 220
CHICO, CALIFORNIA 95928

CITY OF CHICO
CAPITAL PROJECT SERVICES
411 MAIN STREET
CHICO, CA 95927

IRRIGATION NOTES

1. THIS SYSTEM IS DESIGNED FOR A MAXIMUM DEMAND OF 40 GPM. AVERAGE STATIC PRESSURE IS 50 PSI AT THE POINT OF CONNECTION AND NO LESS THAN 5 PSI AT THE FARTHEST IRRIGATION EMITTER AND 30 PSI AT THE FARTHEST IRRIGATION SPRAY HEAD. CONTACT THE LANDSCAPE ARCHITECT IN THE EVENT THAT FIELD TESTED PRESSURE IS LESS THAN STATED, PRIOR TO CONSTRUCTION.
2. THE INTENT OF THIS IRRIGATION SYSTEM IS TO PROVIDE THE MINIMUM AMOUNT OF WATER REQUIRED TO SUSTAIN GOOD PLANT HEALTH. ADJUST CLOCK AS REQUIRED TO ACHIEVE THIS GOAL AS REQUIRED BY THE TIME OF YEAR. SEE SHEET LS-2.10 FOR SEASONAL IRRIGATION SCHEDULE. ADJUST AS REQUIRED FOR PLANT ESTABLISHMENT PERIOD.
3. THIS DRAWING IS DIAGRAMMATIC. IRRIGATION COMPONENTS SHOWN BENEATH PAVING, EXISTING TREE TRUNKS, OR PLANTINGS IS FOR GRAPHIC CLARITY ONLY. PLACE ALL PIPING, VALVES, AND OTHER IRRIGATION COMPONENTS WITHIN THE ADJACENT PLANTER EXCEPT WHERE PIPES CROSS PAVING. PLACE PIPING TO PREVENT CONFLICT WITH SUBSEQUENT PLANTING. REFER TO PLANTING PLAN. IRRIGATION VALVES SHALL BE GROUPED TOGETHER PER DETAIL 7, SHEET LS-2.8 AND LOCATED A MINIMUM OF 17 FEET FROM THE EDGE OF TRAVELLED WAY TO ALLOW ACCESS.
4. CONTRACTOR TO PROVIDE COMPLETE 'AS-BUILT' DRAWINGS TO CITY AT COMPLETION OF PROJECT.
5. TRENCH ALL MAIN LINES TO A DEPTH OF 18", TRENCH ALL LATERAL LINES TO A DEPTH OF 12". TRENCH ALL MAIN OR LATERAL LINES PER UTILITY PLAN AND CAL TRANS STANDARDS' WHERE CROSSING UNDER PAVEMENT .
6. INSTALL SLEEVES WHERE SHOWN ON PLAN, PRIOR TO THE PLACEMENT OF PAVING. COORDINATE WITH PAVING CONTRACTOR.
7. ALL REMOTE CONTROL VALVES, QUICK COUPLER VALVES, AIR RELIEF VALVES, AND FLUSH VALVES SHALL BE INSTALLED IN PLANTER AND IN VALVE BOXES.
8. CONTRACTOR IS RESPONSIBLE FOR PROVIDING 120 VOLT POWER TO IRRIGATION CONTROLLER. IRRIGATION CONTRACTOR IS RESPONSIBLE FOR THE COORDINATION AND HOOK-UP OF POWER TO THE CONTROLLER.
9. SEE SHEET LS-2.9 FOR SYSTEM CAPACITY DOCUMENTATION. SEE SHEET LS-2.10 FOR WATER USE DOCUMENTATION.
10. ALL PROPRIETARY SPECIFICATIONS MAY BE SUBSTITUTED WITH EQUAL OR BETTER EQUIPMENT BY ANOTHER MANUFACTURER UPON APPROVAL BY PROJECT LANDSCAPE ARCHITECT.
11. SEE DETAILS AND SPECIFICATIONS FOR DOCUMENTATION.

SPRINKLER LEGEND

SYMBOL	MFG'R	DESCRIPTION	MODEL	FLOW (GPM)	DETAIL
	SALCO/ RAINBIRD	EMITTER/ SWINGPIPE, SHRUBS- (SALCO PRO-SPEC EMITTERS WITH RAINBIRD SPX SERIES SWING PIPE AND SB SERIES FITTINGS)	SALCO PRO-SPEC EMITTER: SLV-PST-2 SWING PIPE: SPX-100 FITTINGS: SBE-050/ SBA-050/ SB-TEE (AS REQUIRED)	2 GPH PER EMITTER/ 4 GPH PER SHRUB BUBBLER ASSEMBLY (2 EMITTERS PER SHRUB)	1/ LS-2.8
	SALCO/ RAINBIRD	EMITTER/ SWINGPIPE, VINES- (SALCO PRO-SPEC EMITTERS WITH RAINBIRD SPX SERIES SWING PIPE AND SB SERIES FITTINGS)	SALCO PRO-SPEC EMITTER: SLV-PST-2 SWING PIPE: SPX-100 FITTINGS: SBE-050/ SBA-050/ SB-TEE (AS REQUIRED)	2 GPH PER EMITTER/ 4 GPH PER VINE BUBBLER ASSEMBLY (2 EMITTERS PER VINE)	1/ LS-2.8
	SALCO/ RAINBIRD	EMITTER/ SWINGPIPE, TREES- (SALCO PRO-SPEC EMITTERS WITH RAINBIRD SPX SERIES SWING PIPE AND SB SERIES FITTINGS)	SALCO PRO-SPEC EMITTER: SLV-PST-2 SWING PIPE: SPX-100 FITTINGS: SBE-050/ SBA-050/ SB-TEE (AS REQUIRED)	2 GPH PER EMITTER/ 8 GPH PER TREE BUBBLER ASSEMBLY (4 EMITTERS PER TREE)	2/ LS-2.8
	RAINBIRD	IRRIGATION HEAD	1812-SAM-PRS-8 (Q, T, H, TT, TQ, F)	.26, .35, .52, 1.05	1/ LS-10
	RAINBIRD	IRRIGATION HEAD	1812-SAM-PRS-10(Q, T, H, TT, TQ, F)	.39, .53, .79, 1.58	1/ LS-10
	RAINBIRD	IRRIGATION HEAD	1812-SAM-PRS-12 (Q, T,, H, TT, TQ, F)	.65, .87, 1.3, 2.6	1/ LS-10
	RAINBIRD	IRRIGATION HEAD	1812-SAM-PRS-15S (EST/ SST)	.61, 1.21	1/ LS-10

NOTE:
SEE SHEET LS-2.0 FOR IRRIGATION LEGEND

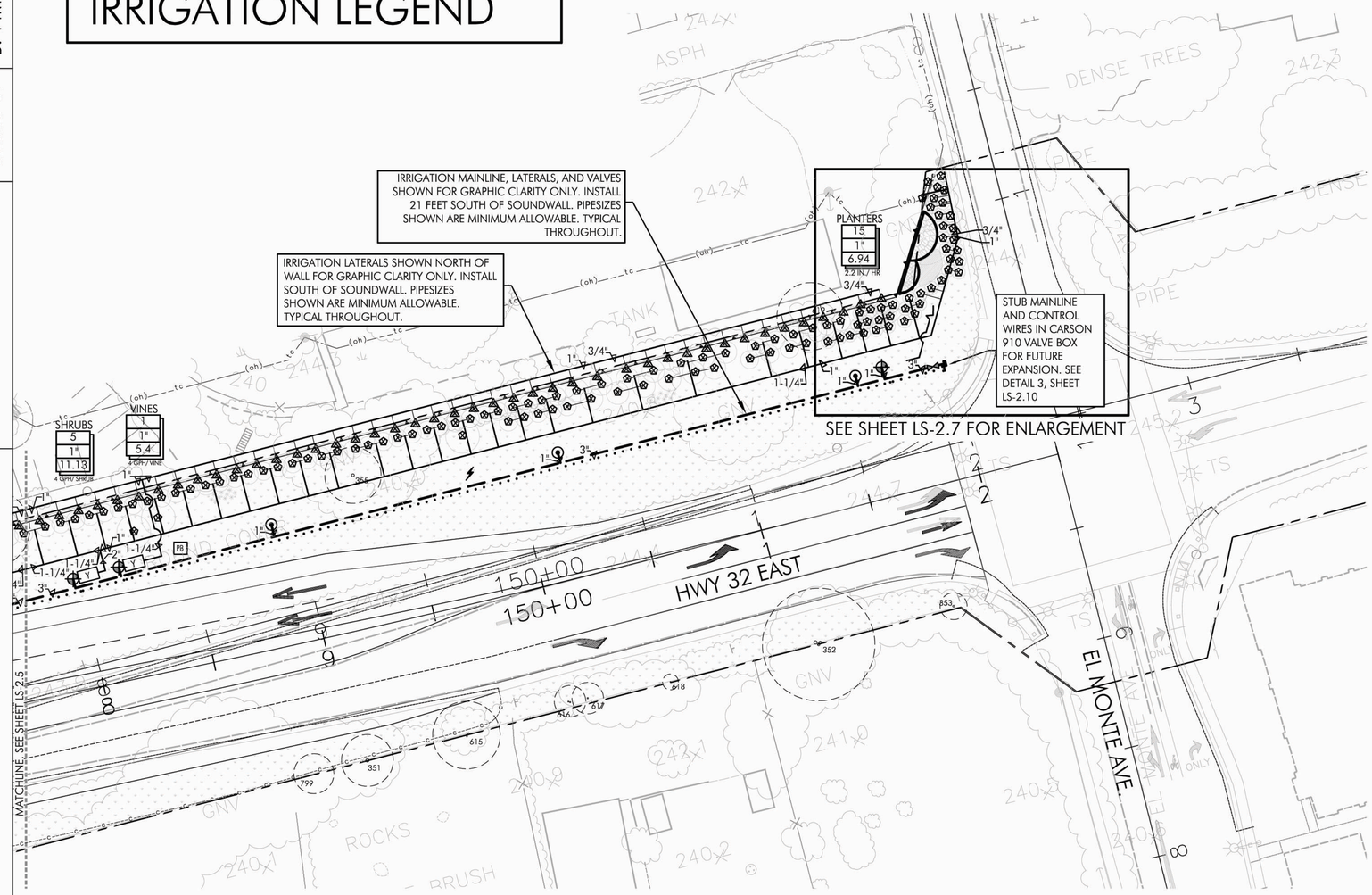

HIGHWAY 32-
PHASE 1

LANDSCAPE
IRRIGATION
PLAN

SHEET LS-2.6

NORTH

0 30 60
SCALE: 1" = 30'-0"

STATE OF CALIFORNIA — DEPARTMENT OF TRANSPORTATION
Caltrans

CONSULTANT FUNCTIONAL SUPERVISOR: BRIAN FIRTH
CALCULATED-DESIGNED BY: B. FIRTH/ JBB
CHECKED BY: B. FIRTH
REVISED BY
DATE REVISED

LAST REVISION 00-00-00
DATE PLOTTED => $DATE
TIME PLOTTED => $TIME

Dist	COUNTY	ROUTE	POST MILES TOTAL PROJECT	SHEET No.	TOTAL SHEETS
03	But	32	10.3/11.3	124	144

12-22-11
LICENSED LANDSCAPE ARCHITECT DATE

DECEMBER 22, 2011
PLANS APPROVAL DATE

REGISTERED LANDSCAPE ARCHITECT
BRIAN D. FIRTH #2752
EXP. 06-13
STATE OF CALIFORNIA

THE STATE OF CALIFORNIA OR ITS OFFICERS OR AGENTS SHALL NOT BE RESPONSIBLE FOR THE ACCURACY OR COMPLETENESS OF SCANNED COPIES OF THIS PLAN SHEET.

BRIAN FIRTH LANDSCAPE ARCHITECT, INC.
627 BROADWAY, SUITE 220
CHICO, CALIFORNIA 95928

CITY OF CHICO
CAPITAL PROJECT SERVICES
411 MAIN STREET
CHICO, CA 95927

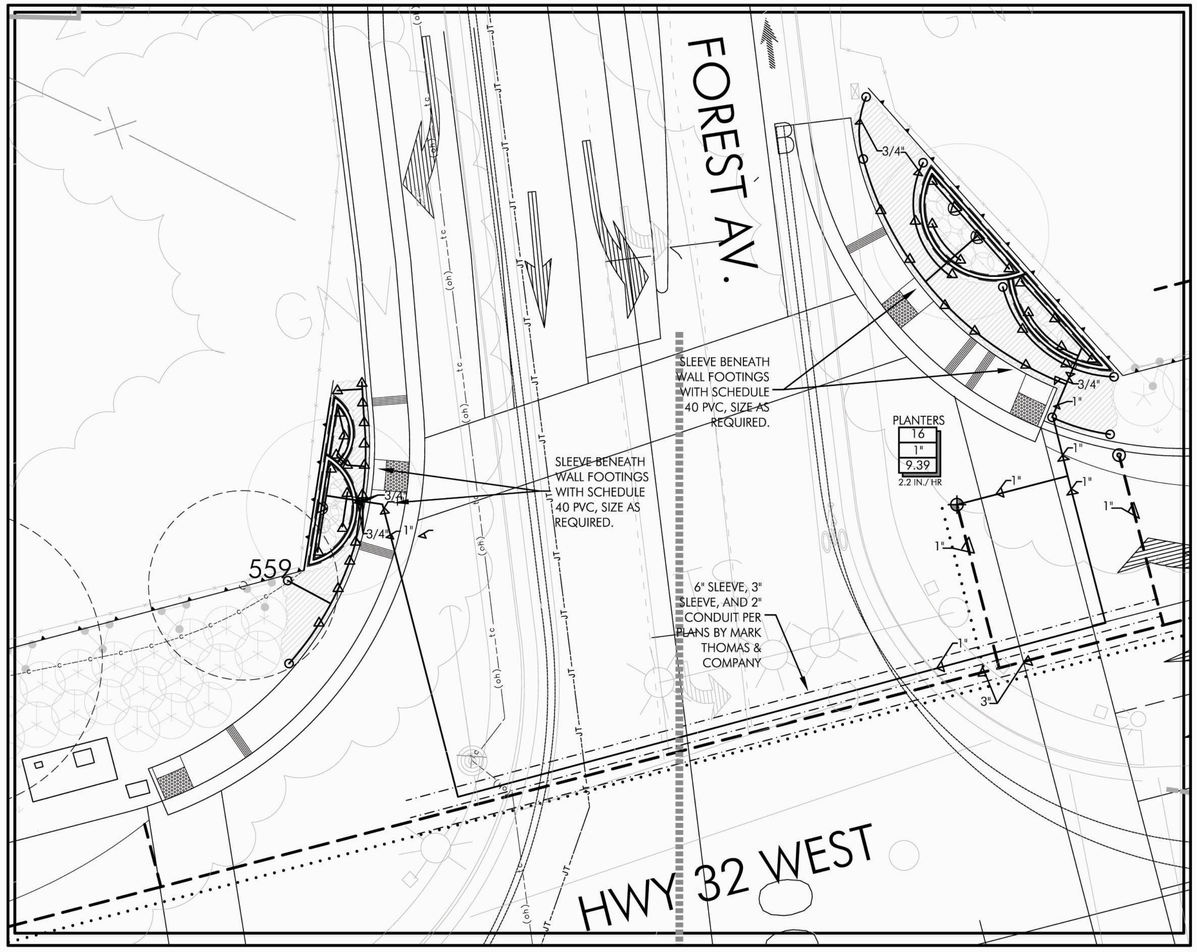

CORNER ENLARGEMENT: FOREST AVENUE AND HIGHWAY 32

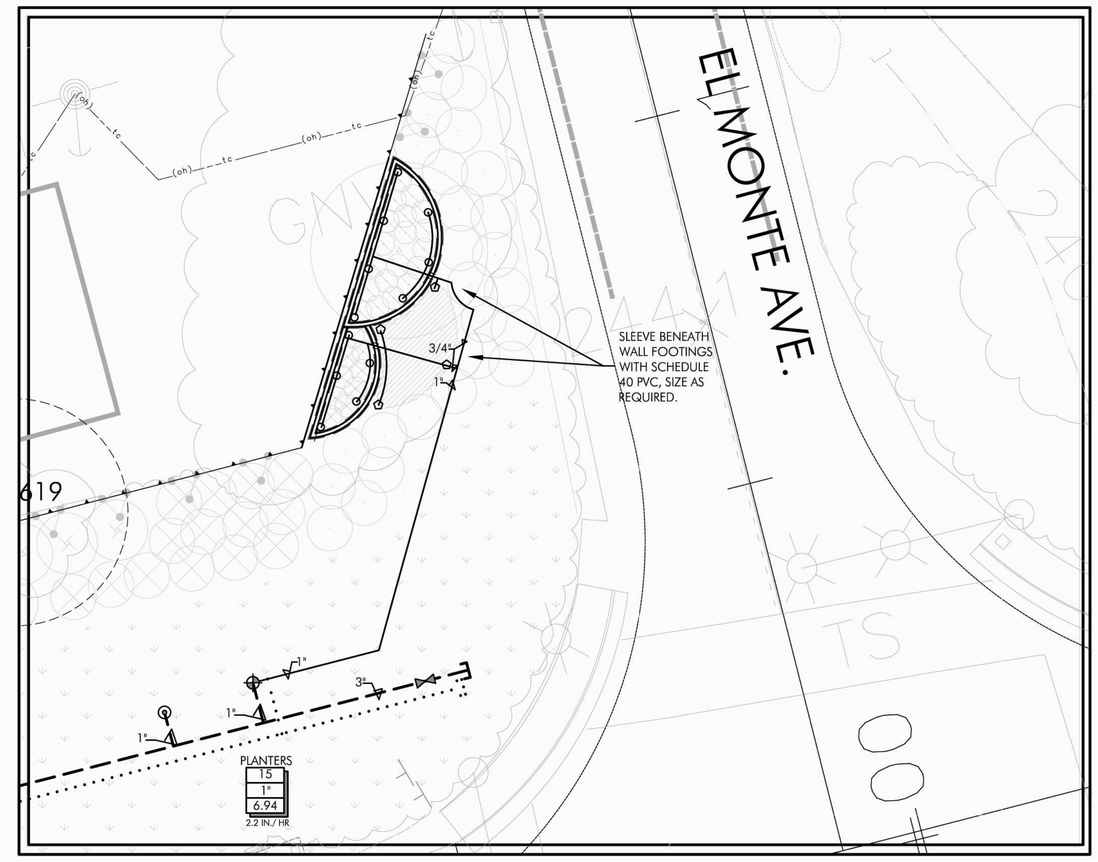

NOTE:
SEE SHEET LS-2.0 FOR IRRIGATION LEGENDS AND NOTES

HIGHWAY 32- PHASE 1
LANDSCAPE IRRIGATION PLAN
SHEET LS-2.7

NORTH
0 10 20
SCALE: 1" = 10'-0"

STATE OF CALIFORNIA – DEPARTMENT OF TRANSPORTATION
Caltrans®
CONSULTANT FUNCTIONAL SUPERVISOR: BRIAN FIRTH
CALCULATED-DESIGNED BY: B. FIRTH/ JBB
CHECKED BY: B. FIRTH
REVISED BY
DATE REVISED

LAST REVISION 00-00-00
DATE PLOTTED => $DATE
TIME PLOTTED => $TIME

Dist	COUNTY	ROUTE	POST MILES TOTAL PROJECT	SHEET No.	TOTAL SHEETS
03	But	32	10.3/11.3	125	144

LICENSED LANDSCAPE ARCHITECT DATE 12-22-11

DECEMBER 22, 2011
PLANS APPROVAL DATE

REGISTERED LANDSCAPE ARCHITECT BRIAN D. FIRTH #2752 EXP. 06-13 STATE OF CALIFORNIA

THE STATE OF CALIFORNIA OR ITS OFFICERS OR AGENTS SHALL NOT BE RESPONSIBLE FOR THE ACCURACY OR COMPLETENESS OF SCANNED COPIES OF THIS PLAN SHEET.

BRIAN FIRTH LANDSCAPE ARCHITECT, INC.
627 BROADWAY, SUITE 220
CHICO, CALIFORNIA 95928

CITY OF CHICO
CAPITAL PROJECT SERVICES
411 MAIN STREET
CHICO, CA 95927

HIGHWAY 32- PHASE 1
LANDSCAPE IRRIGATION DETAILS

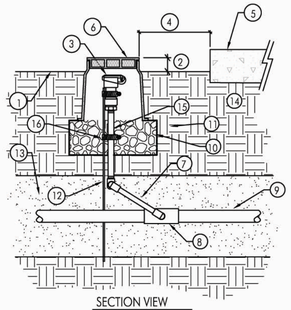

SECTION VIEW

1. FINISH GRADE
2. SET TOP OF BOX ABOVE FINISH GRADE: 3-1/2" ABOVE FINISH GRADE LANDSCAPE AREAS RECEIVING WOOD CHIP MULCH. ½" ABOVE FINISH GRADE IN AREAS RECEIVING HYDROSEED
3. QUICK COUPLING VALVE WITH LOCKING RUBBER COVER; SET VALVE HEIGHT SO QUICK COUPLER KEY CLEARS VALVE BOX.
4. SET VALVE BOX 12" FROM EDGE OF PLANTING AREA
5. CURB, HEADER OR PAVING WHERE APPLICABLE
6. 10" DIAMETER PLASTIC VALVE BOX WITH BOLT DOWN LOC KIT. HEAT BRANDED 'QCV' ON TOP
7. MANUFACTURED TRIPLE SWING JOINT, KBI MODEL TSA-1000-TT OR APPROVED EQUAL
8. PVC SCHEDULE 80 TEE
9. PVC CLASS 315 OR SCHEDULE 40 MAINLINE; SIZE PER PLAN
10. 3/4" CRUSHED ROCK, 6" MINIMUM DEPTH
11. 1/4" GALVANIZED WIRE CLOTH
12. #4 X 30" REBAR; SECURE TO QUICK COUPLER VALVE WITH STAINLESS STEEL HOSE CLAMPS AND SCREWS (TYP. 2 PLCS.)
13. SAND BACKFILL; 6" ABOVE AND BELOW MAIN LINE
14. NATIVE SUBGRADE
15. PVC SCHEDULE 80 NIPPLE; LENGTH AS NEEDED
16. STAINLESS STEEL HOSE CLAMP WITH STAINLESS STEEL SCREWS (TYP. 2 PLCS.)

NOTE:
ALL NON "O" RING THREADED CONNECTIONS SHALL RECEIVE MIN. 3 WRAPS OF TEFLON TAPE.

NTS

QUICK COUPLER VALVE | 6

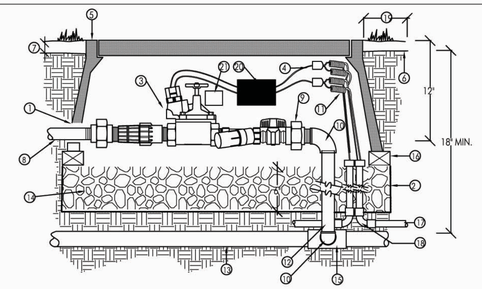

SECTION VIEW

1. TRIM VALVE BOX TO PROVIDE 1" CLEARANCE OVER PIPE
2. 1/4" GALVANIZED WIRE CLOTH PLACED ABOVE GRAVEL
3. REMOTE CONTROL DRIP VALVE ASSEMBLY; SIZE AND MODEL PER PLAN
4. LOCKING WATERPROOF WIRE CONNECTOR, MODELS TKHP LV-9000, DS-400 OR APPROVED EQUAL.
5. PLASTIC VALVE BOX WITH LOCKING COVER. CARSON MODEL 1220-12 OR APPROVED EQUAL. SEE SPECIFICATIONS.
6. FINISH GRADE
7. 3-1/2" ABOVE FINISH GRADE LANDSCAPE AREAS RECEIVING WOOD CHIP MULCH. ½" ABOVE FINISH GRADE IN AREAS RECEIVING HYDROSEED
8. PVC SCHEDULE 40 LATERAL LINE; PROVIDE 18" LENGTH PRIOR TO FIRST FITTING.
9. SCHEDULE 80 PVC UNION, TxT (TYP. 2 PLCS.)
10. SCHEDULE 40 PVC ELBOW, SxT
11. 2-WIRE DECODER CABLE, RAINMASTER MODEL: TW-CAB-14 OR APPROVED EQUAL. PROVIDE MINIMUM 18" COILED EXTRA IN VALVE BOX
12. SCHEDULE 40 PVC NIPPLE; LENGTH AS REQUIRED
13. PVC SCHEDULE 40 OR CLASS 315 MAINLINE. 18" MINIMUM COVER. SEE SPECIFICATIONS.
14. 3/4" CRUSHED ROCK; 6" DEPTH
15. SCHEDULE 80 PVC TEE (SxSxS)
16. (4) COMMON BRICKS FOR VALVE BOX SUPPORT
17. PVC SCHEDULE 40 CONDUIT; SIZE AS NEEDED. SEE SPECIFICATIONS.
18. PVC SCHEDULE 40 CONDUIT SWEEP, COUPLED BOTH ENDS
19. 17' FROM EDGE OF TRAVELLED WAY, 9 FEET FROM EDGE OF ASPHALT.
20. 2 WIRE DECODER. RAINMASTER TW-D-1, 1 PER REMOTE CONTROL VALVE, TYPICAL.
21. VALVE IDENTIFICATION TAG. SEE BOOK FORM SPECIFICATIONS.

NOTES:
1. ALL SLIP FITTINGS TO BE PRIMED AND GLUED.
2. ONE VALVE PER BOX
3. INSTALL MINIMUM OF 12" FROM STRUCTURES OR HARDSCAPE.
4. INSTALL IN PLANTER BEDS WHERE POSSIBLE.
5. PLACE VALVE BOX AT RIGHT ANGLES TO STRUCTURES OR HARDSCAPE.
6. USE MIN. 3 WRAPS OF TEFLON TAPE AT EACH THREADED CONNECTION.
7. SEE IRRIGATION PLANS FOR LIGHTNING ARRESTOR/ GROUNDING LOCATIONS. SEE IRRIGATION LEGEND, SHEET LS-2.0 FOR ADDITIONAL INFORMATION

NTS

REMOTE CONTROL VALVE (DRIP) | 4

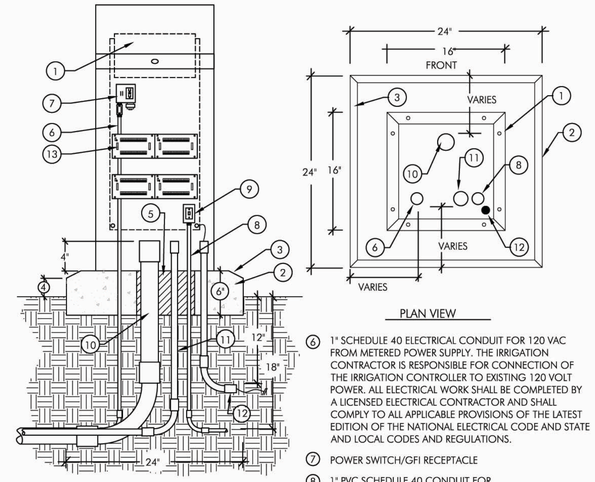

FRONT ELEVATION VIEW

PLAN VIEW

1. SATELLITE CONTROLLER WITH 16" STAINLESS STEEL TOP ENTRY ENCLOSURE; MODEL PER PLANS AND SPECIFICATIONS
2. POURED CONCRETE BASE; 6" MINIMUM THICKNESS, EXTEND CONCRETE 4" BEYOND OUTSIDE DIMENSIONS OF ENCLOSURE WITH 1/2% SLOPE FOR DRAINAGE.
3. 1" CHAMFER
4. 3-1/2" ABOVE FINISH GRADE LANDSCAPE AREAS RECEIVING WOOD CHIP MULCH. ½" ABOVE FINISH GRADE IN AREAS RECEIVING HYDROSEED
5. FILL VOIDS WITH CONCRETE (TYPICAL)
6. 1" SCHEDULE 40 ELECTRICAL CONDUIT FOR 120 VAC FROM METERED POWER SUPPLY. THE IRRIGATION CONTRACTOR IS RESPONSIBLE FOR CONNECTION OF THE IRRIGATION CONTROLLER TO EXISTING 120 VOLT POWER. ALL ELECTRICAL WORK SHALL BE COMPLETED BY A LICENSED ELECTRICAL CONTRACTOR AND SHALL COMPLY TO ALL APPLICABLE PROVISIONS OF THE LATEST EDITION OF THE NATIONAL ELECTRICAL CODE AND STATE AND LOCAL CODES AND REGULATIONS.
7. POWER SWITCH/GFI RECEPTACLE
8. 1" PVC SCHEDULE 40 CONDUIT FOR TELECOMMUNICATION POINT OF CONNECTION (PHONE LINE). CONNECT WIRING FROM CONTROLLER TO TELECOMMUNICATION LINE. VERIFY EXACT LOCATION IN FIELD. SEE PLANS BY MARK THOMAS & COMPANY FOR ADDITIONAL INFORMATION.
9. PHONE JACK PER MANUFACTURER'S SPECIFICATIONS
10. PVC SCHEDULE 40 CONDUIT FOR CONTROL WIRES; SIZE AS REQUIRED, 3" MINIMUM
11. 1-1/4" PVC SCHEDULE 40 CONDUIT FOR FLOW SENSOR CABLE
12. 1-1/2" PVC CONDUIT W TO EARTH GROUND. REFER TO DETAIL 6/ LS-2.9
13. 2 WIRE INTERFACE

NTS

CONTROLLER | 2

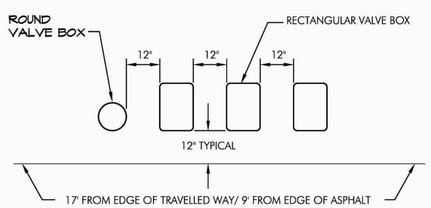

TOP VIEW

1. CENTER VALVE BOX OVER REMOTE CONTROL VALVE TO FACILITATE SERVICING VALVE.
2. SET BOXES PARALLEL TO EACH OTHER AND PERPENDICULAR TO EDGE OF HIGHWAY OR SIDEWALK (WHERE APPLICABLE)
3. AVOID HEAVILY COMPACTING SOIL AROUND VALVE BOXES TO PREVENT COLLAPSE AND DEFORMATION OF VALVE BOX SIDES.
4. INSTALL VALVE BOX EXTENSION BY VALVE BOX MANUFACTURER AS REQUIRED TO COMPLETELY ENCLOSE VALVE ASSEMBLY.

VALVE BOXES | 7

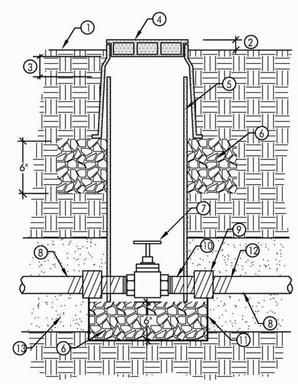

SECTION VIEW

1. FINISH GRADE
2. SET TOP OF BOX ABOVE FINISH GRADE: 3-1/2" ABOVE FINISH GRADE LANDSCAPE AREAS RECEIVING WOOD CHIP MULCH. ½" ABOVE FINISH GRADE IN AREAS RECEIVING HYDROSEED
3. ALLOW 3" BETWEEN TOP OF THE INTERIOR VALVE BOX COVER AND PVC PIPE.
4. GREEN PLASTIC VALVE BOX WITH BOLT DOWN LOC-KIT; CARSON MODEL 910 OR APPROVED EQUAL
5. 8" DIAMETER SCHEDULE 40 PVC PIPE; LENGTH AS REQUIRED
6. 3/4" CRUSHED ROCK; 6" MINIMUM DEPTH
7. GATE VALVE 2-1/2" AND SMALLER WITH BRONZE CROSS HANDLE. SEE SPECIFICATIONS.
8. PVC SCHEDULE 40 OR CLASS 315 MAIN LINE AS PER PLANS
9. PVC SCHEDULE 40 COUPLER
10. PVC SCHEDULE 80 T.O.E. NIPPLE
11. 1/4" GALVANIZED WIRE CLOTH
12. WRAP ALL PVC PIPE EXPOSED TO CRUSHED ROCK WITH 20MIL CORROSION RESISTANT TAPE.
13. SAND BACKFILL; 6" ABOVE AND BELOW MAIN LINE

NOTE:
1. GATE VALVES 2-1/2" AND SMALLER SHALL BE THREADED.
2. WHEN THE MAIN LINE IS TERMINATED AT THE VALVE, EXTEND MAIN LINE 48" BEYOND VALVE BOX AND CAP.

NTS

ISOLATION VALVE | 5

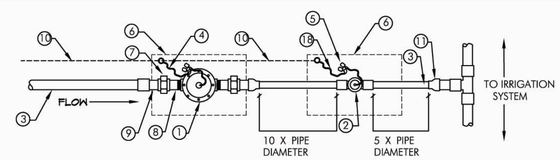

PLAN VIEW

1. NORMALLY OPENED MASTER VALVE, INSTALL DOWNSTREAM OF BACKFLOW PREVENTER (SEE PLANS AND SPECIFICATIONS)
2. TEE MOUNTED FLOW SENSOR (SEE PLANS AND SPECIFICATIONS)
3. PVC SCHEDULE 40 OR CLASS 315 MAINLINE
4. 2-WIRE DECODER CABLE, RAINMASTER MODEL: TW-CAB-14 OR APPROVED EQUAL. PROVIDE MINIMUM 18" COILED EXTRA IN VALVE BOX
5. WATERPROOF CONNECTIONS 3M MODEL DBR-6 OR APPROVED EQUAL. (NOTE POLARITY ON SENSOR TO SENSOR CABLE HOOKUP.)
6. GREEN PLASTIC VALVE BOX WITH BOLT DOWN LOC-KIT; CARSON MODEL 1419 OR APPROVED EQUAL.
7. PVC SCHEDULE 80 UNION, SS (TYP. 2 PLCS.)
8. PVC SCHEDULE 80 NIPPLE, T.O.E.; SIZE PER VALVE SIZE, 3" MINIMUM LENGTH (TYP. 2 PLCS.)
9. PVC SCHEDULE 80 NIPPLE, T.O.E.; SIZE PER VALVE SIZE, 3" MINIMUM LENGTH (TYP. 2 PLCS.)
10. 2" PVC SCHEDULE 40 CONDUIT AND 2-WIRE CABLE FROM FLOW SENSOR AND MASTER VALVE TO CONTROLLER. INSTALL PULL BOXES AT CHANGES IN DIRECTION AND AS NEEDED
11. PVC REDUCER COUPLINGS (S x S), SIZE PER PIPE SIZE
12. (4) COMMON BRICKS FOR VALVE BOX SUPPORT
13. VALVE BOX EXTENSION
14. 3/4" CRUSHED ROCK; 6" MINIMUM DEPTH
15. 1/4" GALVANIZED WIRE CLOTH
16. VALVE BOX. CARSON 1419 OR EQUAL, COLOR: GREEN.
17. FINISH GRADE. TOP OF VALAVE BOX TO BE 3-1/2" ABOVE FINISH GRADE AT LANDSCAPE AREAS RECEIVING WOOD CHIP MULCH. ½" ABOVE FINISH GRADE IN AREAS RECEIVING HYDROSEED
18. 2, #20 FOIL SHEILD W/ DRAIN BLACK JACKET, DIRECT BURIAL BLACK, WHITE. ALLOW 2' OF EXTRA CABLE. (EV-CAB-SEN)

NOTES:

1. FLOW SENSOR MUST BE INSTALLED WITH INSERT (TOP) POSITIONED VERTICALLY AND BODY (TEE) POSITIONED HORIZONTALLY.
2. INSTALL FLOW SENSOR CABLE IN 1 1/4" CONDUIT FROM FLOW SENSOR TO CONTROLLER ENCLOSURE.

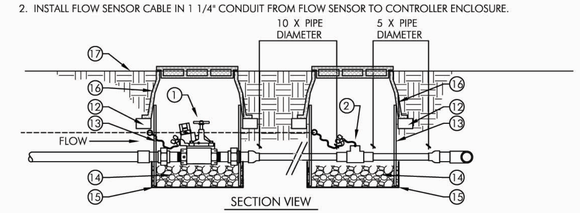

SECTION VIEW

NTS

FLOW SENSING ASSEMBLY | 3

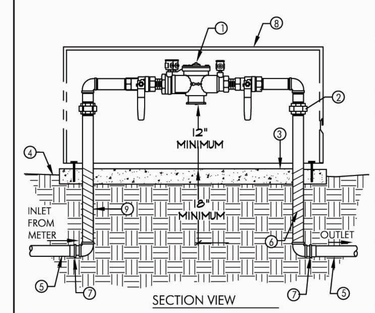

SECTION VIEW

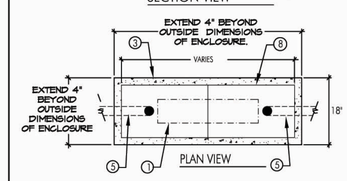

PLAN VIEW

1. REDUCED BACKFLOW PREVENTER, WILKINS 975XL OR APPROVED EQUAL (SIZE PER PLANS)
2. UNION (TYPICAL)
3. 4" CONCRETE PAD: SET 3-1/2" ABOVE FINISH GRADE LANDSCAPE AREAS RECEIVING WOOD CHIP MULCH. ½" ABOVE FINISH GRADE IN AREAS RECEIVING HYDROSEED
4. FINISH GRADE
5. PVC SCHEDULE 40 OR CLASS 315 MAINLINE, SIZE AND TYPE PER PLAN
6. WRAP ALL BURIED GALVANIZED PIPE AND FITTINGS WITH 20MIL CORROSION PROTECTION TAPE.
7. PVC SCHEDULE 40 ADAPTER/BUSHING (MIPT X SLIP).
8. STRONG BOX ENCLOSURE; SIZE AND MODEL PER PLAN
9. SCHEDULE 40 GALVANIZED PIPE AND FITTINGS

NOTE:

1. INSTALL WITH INSULATED BACKFLOW BLANKET; SIZE AS REQUIRED.
2. PROVIDE LOCK KEYED TO CITY OF CHICO SPECIFICATIONS

NTS

BACKFLOW PREVENTER ASSEMBLY | 1

SHEET LS-2.8

REVISED BY	DATE REVISED

CALCULATED-DESIGNED BY: B. FIRTH/ JBB
CHECKED BY: B. FIRTH
CONSULTANT FUNCTIONAL SUPERVISOR: BRIAN FIRTH
STATE OF CALIFORNIA — DEPARTMENT OF TRANSPORTATION
Caltrans

LAST REVISION 00-00-00
DATE PLOTTED => $DATE
TIME PLOTTED => $TIME

Dist	COUNTY	ROUTE	POST MILES TOTAL PROJECT	SHEET No.	TOTAL SHEETS
03	But	32	10.3/11.3	126	144

LICENSED LANDSCAPE ARCHITECT DATE 12-22-11

DECEMBER 22, 2011
PLANS APPROVAL DATE

REGISTERED LANDSCAPE ARCHITECT BRIAN D. FIRTH #2752 EXP. 06-13 STATE OF CALIFORNIA

THE STATE OF CALIFORNIA OR ITS OFFICERS OR AGENTS SHALL NOT BE RESPONSIBLE FOR THE ACCURACY OR COMPLETENESS OF SCANNED COPIES OF THIS PLAN SHEET.

BRIAN FIRTH LANDSCAPE ARCHITECT, INC.
627 BROADWAY, SUITE 220
CHICO, CALIFORNIA 95928

CITY OF CHICO
CAPITAL PROJECT SERVICES
411 MAIN STREET
CHICO, CA 95927

HIGHWAY 32- PHASE 1

LANDSCAPE IRRIGATION DETAILS

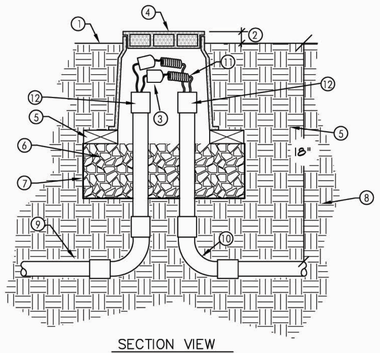

SECTION VIEW

1. FINISH GRADE
2. SET TOP OF BOX ABOVE FINISH GRADE: TOP OF VALVE BOX TO BE 3-1/2" ABOVE FINISH GRADE AT LANDSCAPE AREAS RECEIVING WOOD CHIP MULCH. ½" ABOVE FINISH GRADE IN AREAS RECEIVING HYDROSEED
3. LOCKING, WATERPROOF WIRE CONNECTOR, MODEL TKHP LV-9000, DRI-SPLICE DS-400 OR APPROVED EQUAL
4. GRAY PLASTIC VALVE BOX WITH BOLT DOWN LOC-KIT, CARSON MODEL 1419 OR APPROVED EQUAL
5. (4) COMMON BRICKS FOR SUPPORT
6. 3/4" CRUSHED ROCK; 6" MINIMUM DEPTH
7. 1/4" GALVANIZED WIRE CLOTH
8. UNDISTURBED SUBGRADE
9. PVC SCHEDULE 40 CONDUIT
10. PVC SCHEDULE 40 CONDUIT SWEEP ELBOWS WITH COUPLERS BOTH ENDS
11. COMMON AND CONTROL WIRES. PROVIDE MINIMUM 18" COILED EXTRA.
12. PVC SCH. 40 CONDUIT RISERS WITH COUPLERS AT ENDS.

NOTES:

SEE BOOK FORM LANDSCAPE IRRIGATION SPECIAL PROVISIONS FOR ADDITIONAL INFORMATION.

NTS

ELECTRICAL PULL BOX | 5

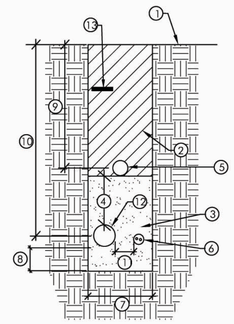

SECTION VIEW

NOTE:
SIDES OF TRENCH WILL BE DUG SQUARE AND CLEAN OF ALL SHARP MATERIAL.

1. FINISH GRADE
2. TOPSOIL BACKFILL, NO PARTICLES GREATER THAN 1"
3. COMPACT PER SPECIFICATIONS.
4. SIX INCHES SAND FILL COVER, ABOVE MAINLINE
5. PVC PIPE LATERAL
6. 2 WIRE DECODER CABLES IN PVC SCHEDULE 40 CONDUIT; SIZE AS NEEDED.
7. WIDTH AS NEEDED TO PROVIDE MINIMUM HORIZONTAL SEPARATION; SEE SPECIFICATIONS
8. 6" FROM BOTTOM OF TRENCH
9. LATERAL -12" MIN. COVER
10. MAINLINE -18" MIN. COVER
11. 4" MINIMUM SEPARATION
12. PVC SCHEDULE 40 OR CL-315 MAIN LINE PIPE
13. 48 MM. WIDE UNDERGROUND DETECTABLE TAPE; INSTALL 12" BELOW FINISH GRADE AND RUN ENTIRE LENGTH OF MAIN LINE AND ON ALL MAIN LINE BRANCES

NTS

TRENCHING | 3

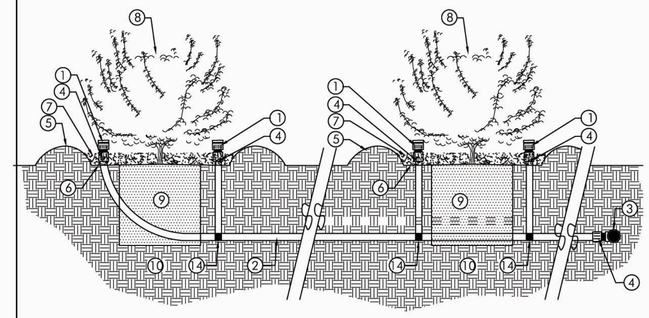

SECTION VIEW

1. LOW VOLUME EMITTER WITH ½" FIPT BASE CONFIGURATION- SIZE AND TYPE PER PLAN. INSTALL 3" ABOVE ROOTBALL. INSTALL 2 EMITTERS AT EACH SHRUB AND VINE PLANTING.
2. 1/2" IPS-PVC FLEXIBLE HOSE. RAINBIRD SPX-FLEX 100 OR APPROVED EQUAL.
3. S x S x ½" FIPT PVC FITTING ON PVC LATERAL LINE
4. SPIRAL BARB FITTING, ½" COMPRESSION BARB X 1/2" MIPT. RAINBIRD MODEL: SBA-050 OR APPROVED EQUAL.
5. 4" HIGH WATER RETENTION BERM AS PER PLANTING PLAN
6. FINISH GRADE
7. TOP DRESSING MULCH PER PLANTING PLAN
8. SHRUB PLANTINGS PER PLANTING PLAN
9. PLANTING HOLE BACKFILL MIX AS PER SPECIFICATIONS.
10. NATIVE SUBGRADE
11. SPIRAL BARB FITTING. RAINBIRD SB-TEE OR APPROVED EQUAL.

NOTES:

1. LOCATE BUBBLERS WITHIN WATER RETENTION BERM AND CLOSE ENOUGH TO THE SHRUB OR VINE SO AS TO PROVIDE ADEQUATE IRRIGATION OF THE ROOT ZONE.

2. INSTALL 2 EMITTERS AT EACH SHRUB OR VINE LOCATION.

NTS

SHRUB/ VINE EMITTER ASSEMBLY | 1

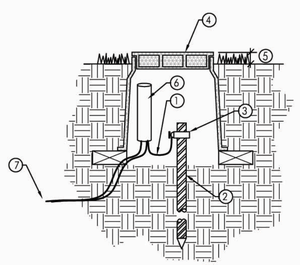

SECTION VIEW

1. #8 BARE COPPER WIRE CONNECTED FROM GROUND ROD TO THE FIELD UNIT PROTECTIVE GROUNDING CIRCUIT. RESISTANCE OF THE GROUND TO CONTROLLER NOT TO EXCEED 10 OHMS.
2. 5/8" X 8' COPPER CLAD GROUNDING ROD DRIVEN INTO A NEARBY IRRIGATED AREA
3. ACORN CLAMP (SCREW CLAMP OR CADWELD TYPE CONNECTOR)
4. GRAY PLASTIC VALVE BOX WITH LOCKING COVER. SEE SPECIFICATIONS.
5. SET TOP OF BOX ABOVE FINISH GRADE: TOP OF VALVE BOX TO BE 3-1/2" ABOVE FINISH GRADE AT LANDSCAPE AREAS RECEIVING WOOD CHIP MULCH. ½" ABOVE FINISH GRADE IN AREAS RECEIVING HYDROSEED
6. LIGHTNING ARRESTOR- RAINMASTER MODEL: TW-LA-1
7. TO TWO WIRE CABLE (RAINMASTER MODEL: TW-CAB-14 OR APPROVED EQUAL).

NOTES:

1. WHERE GROUNDING TO A CONTROLLER CABINET THEN GROUND WIRE SHOULD BE ON THE SAME LUG AS THE INCOMING SERVICE GROUND CONNECTION. RESISTANCE OF THE GROUND TO CONTROLLER NOT TO EXCEED 10 OHMS.

2. MEASURED RESISTANCE READING AT LIGTHNING ARRESTORS OTHER THAN THAT AT CONTROLLER SHALL BE NO MORE THAN 25 OHMS.

3. GROUNDING ROD MUST BE CONNECTED AT LEAST 8 FEET AWAY FROM THE TWO WIRE PATH AND AT A RIGHT ANGLE TO THE TWO WIRE PATH.

4. ALL INSTALLATIONS SHALL CONFORM TO MANUFACURER'S SPECIFICATIONS AND MEET OF EXCEED THE AMERICAN SOCIETY OF IRRIGATION CONSULTANTS (ASIC) EARTH GROUNDING GUIDELINE 100-2002.

NTS

GROUND ROD DETAIL | 6

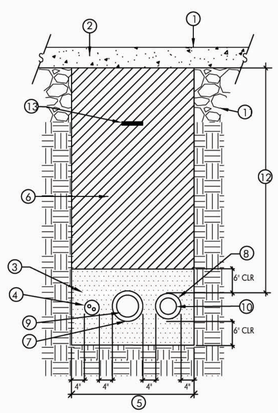

SECTION VIEW

NOTE:
1. SIDES OF TRENCH WILL BE DUG SQUARE AND CLEAN OF ALL SHARP MATERIAL.

1. FINISH GRADE
2. VEHICULAR OR PEDESTRIAN PAVING
3. SAND BACKFILL WITH 6" COVER ABOVE PIPE AND 6" BELOW PIPE
4. 2 WIRE DECODER CABLE WIRES IN GRAY SCHEDULE 40 PVC CONDUIT. MINIMUM SIZE 2" OR AS NEEDED
5. WIDTH AS NEEDED TO MAINTAIN A MINIMUM 4" HORIZONTAL SEPARATION BETWEEN PIPES (SEE SPECIFICATIONS).
6. TRENCH BACKFILL:

   BENEATH VEHICULAR PAVEMENT:
   PER MARK THOMAS PLANS

   BENEATH NON-VEHICULAR PAVEMENT:
   -NATIVE SITE SOIL, COMPACTED TO ELIMINATE SETTLING, 95% RELATIVE DENSITY
7. MAINLINE SLEEVING- SCHEDULE 40 PVC PIPE. SIZE PER PLAN, SEE SPECIFICATIONS
8. LATERAL SLEEVING- SCHEDULE 40 PVC PIPE. SIZE PER PLAN, SEE SPECIFICATIONS
9. PVC MAINLINE; SEE SPECIFICATIONS
10. PVC SCHEDULE 40 LATERAL LINE. SEE SPECIFICATIONS
11. PAVEMENT SUBGRADE- AS PER ENGINEER'S PLANS
12. SLEEVE DEPTH PER PLANS BY MARK THOMAS & COMPANY.
13. 48 MM. WIDE UNDERGROUND DETECTABLE TAPE; INSTALL 12" BELOW FINISH GRADE AND RUN ENTIRE LENGTH OF MAIN LINE AND ON ALL MAIN LINE BRANCES

NTS

TRENCHING BENEATH PAVING | 4

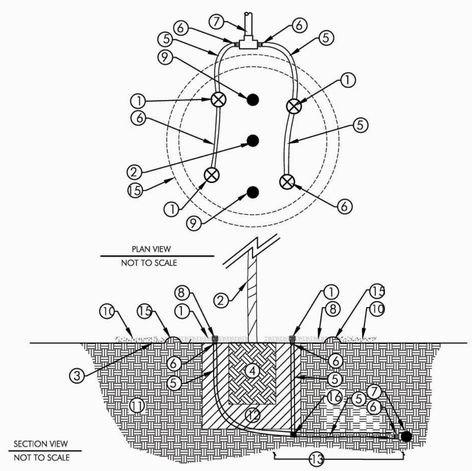

1. BUBBLER- 4 PER TREE. MAKE AND MODEL PER IRRIGATION PLANS. ON FLEXIBLE SWING PIPE WITH BARBED FITTINGS (RAINBIRD SPX-FLEX-100 WITH SB SERIES FITTINGS). DAYLIGHT EMITTER AT FINISH GRADE, CENTERED BETWEEN WATER RETENTION BERM AND PLANTING, AND COVER WITH MULCH (PER PLANTING DETAILS AND SPECIFICATIONS). MULCH TYPE PER PLANTING PLAN.
2. TREE OR SHRUB (SEE PLANTING PLAN)
3. FINISH PLANTER GRADE
4. TREE ROOT BALL
5. 1/2" FLEXIBLE SWING PIPE, RAIN BIRD SPX-FLEX100 OR APPROVED EQUAL. INSTALL A MINIMUM OF 6' SWING PIPE FROM LATERAL TO EMITTER. INSTALL SO THAT RELOCATION OF EMITTERS AS TREES MATURE WILL NOT DISTURB MATURE ROOT GROWTH.
6. 1/2" SWING PIPE FITTING ADAPTER, RAIN BIRD MODEL SBA-050 OR APPROVED EQUAL
7. S x S x ½" FIPT PVC FITTING ON PVC LATERAL LINE.
8. 2" LAYER MULCH WITHIN WATER RETENTION BERM; MULCH TYPE PER PLANTING PLAN
9. TREE STAKES PER TREE PLANTING DETAIL.
10. 2" LAYER DECOMPOSED GRANITE (WHERE APPLICABLE)
11. UNDISTURBED SUBGRADE
12. APPROVED BACKFILL PER PLANTING PLAN
13. INSTALLED LATERAL A MINIMUM OF 4' FROM TREE ROOT BALL
14. NA-
15. WATER RETENTION BERM (SEE PLANTING DETAILS AND SPECIFICATIONS FOR ADDITIONAL IONFORMATION)
16. RAINBIRD SB-TEE (OR APPROVED EQUAL). WHERE APPLICABLE.

NOTE:

USE RAINBIRD SB SERIES SPIRAL BARB FITTINGS (OR APPROVED EQUAL), AS REQUIRED TO CONFIGURE EMITTERS EQUIDISTANTLY AROUND TREE PLANTINGS.

NTS

TREE EMITTER ASSEMBLY | 2

Highway 32 (Phase 1, El Monte to Highway 99)
Chico, California

System Capacity
(Maximum daily water required to irrigate the landscape area in a 10 hour irrigation window)

Where:

27,154 = Gallons per Acre-Inch
HA = Irrigatated Landscape Area (Acres)
43,560 = Square Feet per Acre
Eto = Reference Evapotranspiration (CIMIS Station 131 - Fair Oaks)
0.269 =Historical Daily Peak ETo (Worst Case)
0.70 = Irrigation Efficiency (IE) - Rotors, Rotators, Spray
0.85 = Irrigation Efficiency (IE) - Bubblers, Surface Drip
0.90 = Irrigation Efficiency (IE) - Sub-surface Drip
HR = Irrigation Window (Hours per Day)
60 = Minutes per Hour

Design Capacity

SC = (27,154) (HA) (ETo / IE) / (HR) (60)

SC = 33.14 GPM

Irrigation Window
8 Hours per Day

Irrigated Landscape Area
66,399 = Irrigated Landscape Area (Square Feet)
1.52 =Irrigated Landscape Area (Acres)

SHEET LS-2.9

REVISED BY | DATE REVISED
B. FIRTH/ JBB | B. FIRTH
CALCULATED-DESIGNED BY | CHECKED BY
CONSULTANT FUNCTIONAL SUPERVISOR | BRIAN FIRTH
STATE OF CALIFORNIA — DEPARTMENT OF TRANSPORTATION

LAST REVISION 00-00-00
DATE PLOTTED => $DATE
TIME PLOTTED => $TIME

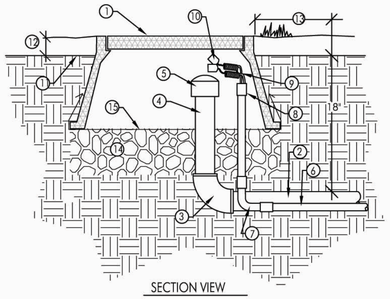

SECTION VIEW

NOTES:
1. ALL SLIP FITTINGS TO BE PRIMED AND GLUED.
2. INSTALL MINIMUM OF 12" FROM STRUCTURES OR HARDSCAPE.
3. INSTALL IN PLANTER BEDS WHERE POSSIBLE.
4. PLACE VALVE BOX AT RIGHT ANGLES TO STRUCTURES OR HARDSCAPE.

1. RECTANGULAR PLASTIC VALVE BOX WITH BOLT DOWN LOC-KIT, CARSON MODEL 1419-B OR APPROVED EQUAL.
2. SCHEDULE 40 OR CLASS 315 MAINLINE, 18" MINIMUM COVER. SEE SPECIFICATIONS.
3. SCHEDULE 40 PVC ELBOW, SxS
4. SCHEDULE 40 OR CLASS 315 MAINLINE STUB-UP
5. SCHEDULE 40 PVC CAP, SLIP
6. PVC SCHEDULE 40 CONDUIT, SIZE PER PLAN
7. PVC SCHEDULE 40 CONDUIT SWEEP; COUPLED BOTH ENDS
8. PVC CONDUIT COUPLER; SOLVENT WELD TO CONDUIT PIPE ENDS. PROVIDE 4" CLEAR SPACE ABOVE CRUSHED ROCK
9. CONTROL AND COMMON WIRES, PROVIDE MIN. 30" COILED EXTRA. SEE SPECIFICATIONS.
10. WATERPROOF WIRE CONNECTOR; TKHP MODEL LV-9000, DRI-SPLICE MODEL DS-400 OR APPROVED EQUAL
11. FINISH GRADE
12. SET TOP OF BOX ABOVE FINISH GRADE: TOP OF VALVE BOX TO BE 3-1/2" ABOVE FINISH GRADE AT LANDSCAPE AREAS RECEIVING WOOD CHIP MULCH. ½" ABOVE FINISH GRADE IN AREAS RECEIVING HYDROSEED
13. 12" FROM HARDSCAPE
14. 3/4" CRUSHED ROCK, 6" DEPTH MINIMUM
15. 1/4" GALVANIZED WIRE CLOTH

NTS

IRRIGATION MAINLINE/ TWO WIRE STUB OUT FOR FUTURE EXPANSION | 3

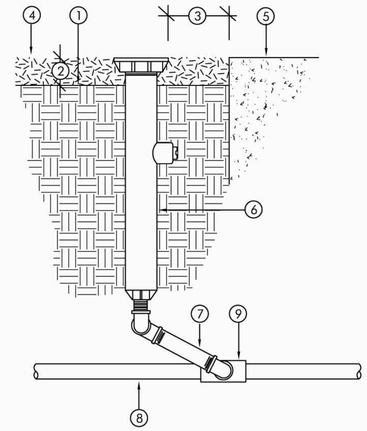

1. FINISH GRADE
2. SET TOP OF SPRINKLER ABOVE FINISH GRADE 3-1/2" ABOVE FINISH GRADE AT LANDSCAPE AREAS RECEIVING WOOD CHIP MULCH. ½" ABOVE FINISH GRADE IN AREAS RECEIVING HYDROSEED
3. SPACING FROM HARDSCAPE: 1" MIN., 2" MAX. INSTALL FLUSH WITH ADJACENT HARDSCAPE AND PERPENDICULAR TO GRADE.
4. TOP OF MULCH
5. EDGE OF PAVING OR FACE OF WALL
6. POP-UP SPRAY SPRINKLER: SIZE AND MODEL PER PLANS
7. RAINBIRD SWING ASSEMBLY: SA-6050, OR APPROVED EQUAL
8. PVC SCHEDULE 40 LATERAL PIPE
9. PVC SCHEDULE 40 FITTING, SL x TH

NTS

IRRIGATION HEAD | 1

Highway 32 (Phase 1, El Monte to Highway 99)
Chico, California

Irrigation Documentation Package
Water Budget Calculation

Maximum Applied Water Allowance (MAWA) - Calculation

MAWA = (Eto) (0.7) (LA) (0.62)

MAWA = 1,486,966 Gallons per Year

Where:
51.6 = Reference Evapotranspiration (ETo) (Ref: CIMIS Station 131)
0.7 = ET Adjustment Factor (percent)
66,399 = Landscape Area (LA) (square feet)
0.62 = Conversion factor (inches to gallons)

Estimated Water Use for Hydrozones (EWU) - Calculation

EWU = (Eto) (PF) (HA) (0.62) / (IE)

Where:
51.6 = Reference Evapotranspiration (ETo) (Ref: CIMIS)
PF = Plant Factor per Hydrozone
HA = Hydrozone Area (square feet)
0.62 = Conversion factor (inches to gallons)
IE = Irrigation Efficiency per Sprinkler Type

Hydrozone 1; Low water use trees; drip.			PR= 0.21
PF =	0.2		
HA =	66,399 (square feet)	1.524311 acres	
IE =	0.9		
EWU =	472052.624 (gallons per year)	1.448676 acre-feet/year	631.0864 ccf/year

Hydrozone 2; Low water use shrubs and ground cover; drip.			PR= 0.21
PF =	0.2		
HA =	66,399 (square feet)	1.524311 acres	
IE =	0.9		
EWU =	472052.624 (gallons per year)	1.448676 acre-feet/year	631.0864 ccf/year

WATER USE DOCUMENTATION

Dist	COUNTY	ROUTE	POST MILES TOTAL PROJECT	SHEET No.	TOTAL SHEETS
03	But	32	10.3/11.3	127	144

12-22-11
LICENSED LANDSCAPE ARCHITECT DATE

DECEMBER 22, 2011
PLANS APPROVAL DATE

REGISTERED LANDSCAPE ARCHITECT BRIAN D. FIRTH #2752 EXP. 06-13 STATE OF CALIFORNIA

THE STATE OF CALIFORNIA OR ITS OFFICERS OR AGENTS SHALL NOT BE RESPONSIBLE FOR THE ACCURACY OR COMPLETENESS OF SCANNED COPIES OF THIS PLAN SHEET.

BRIAN FIRTH LANDSCAPE ARCHITECT, INC.
627 BROADWAY, SUITE 220
CHICO, CALIFORNIA 95928

CITY OF CHICO
CAPITAL PROJECT SERVICES
411 MAIN STREET
CHICO, CA 95927

HIGHWAY 32- PHASE 1

LANDSCAPE IRRIGATION DETAILS, WATER USE DOCUMENTATION, AND MAINTENANCE SCHEDULE

MAINTENANCE SCHEDULE

		Task
1		**Weekly Service (Throughout the year)**
	A.	Visual Check for hazards and damage due to vandalism & repair damaged areas and facilities. Address All Grafitti Immediately upon Observation.
	B.	Visual check of landscape irrigation for lateral and mainline breaks
	C.	Trash, litter, and debris removal (Year Round)
2		**Spring, Summer, and Fall Bi-Weekly Service (Every other week)**
	A.	Weed Control
3		**Monthly Service**
	A.	Clean all walks
	B.	Remove suckers and watersprouts from trees
	C.	Irrigation System Repair
	D.	Check Tree Ties. Adjust as Required.
4		**Twice Yearly**
	A.	Pest Control
	B.	Check Overall Operability of Irrigation System
5		**Annually**
	A.	Spot Supplement Bark Mulch as required to maintain a 3" layer
	B.	Corrective Pruning as Required
	C.	Dead head Container flowers and Plants that die back
	D.	Test Backflow Preventer (Certified Inspector to Perform)
6		**Specialized/ Seasonal Activities**
	A.	Tree Stake Removal at Termination of Usefulness *(One time at approximately 3 years growth)*
	B.	Fertilize Shrub and Groundcover Areas *(every 6 weeks)*
	C.	Plant Replacement

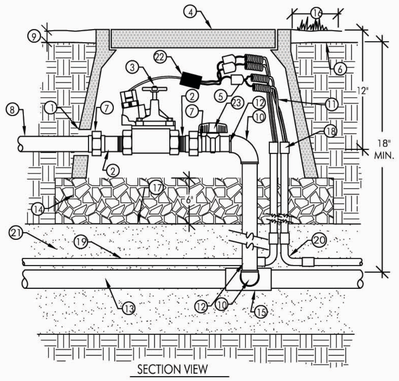

SECTION VIEW

NOTES:
1. ALL SLIP FITTINGS TO BE PRIMED AND GLUED.
2. ONE VALVE PER BOX.
3. INSTALL MINIMUM OF 12" FROM STRUCTURES OR HARDSCAPE.
4. INSTALL IN PLANTER BEDS WHERE POSSIBLE.
5. PLACE VALVE BOX AT RIGHT ANGLES TO STRUCTURES OR HARDSCAPE.
6. USE MIN. 3 WRAPS OF TEFLON TAPE AT EACH THREADED CONNECTION.
7.SEE IRRIGATION PLANS FOR GROUNDING LOCATIONS. SEE DETAIL 2, SHEET LA-2.15 FOR ADDITIONAL INFORMATION

1. TRIM VALVE BOX TO PROVIDE 1" CLEARANCE OVER PIPE.
2. PVC SCHEDULE 80 T.O.E. NIPPLE
3. REMOTE CONTROL VALVE; SIZE AND MODEL PER PLAN
4. RECTANGULAR PLASTIC VALVE BOX WITH BOLT DOWN LOC-KIT, CARSON MODEL 1220-4 OR APPROVED EQUAL.
5. TKHP LV-9000, DS-400 OR APPROVED WATERPROOF WIRE CONNECTOR
6. FINISH GRADE
7. SCHEDULE 80 PVC UNION, SXS
8. PVC SCHEDULE 40 LATERAL; PROVIDE 18" LENGTH DOWNSTREAM OF VALVE PRIOR TO FIRST FITTING.
9. SET TOP OF BOX ABOVE FINISH GRADE: TOP OF VALVE BOX TO BE 3-1/2" ABOVE FINISH GRADE AT LANDSCAPE AREAS RECEIVING WOOD CHIP MULCH. ½" ABOVE FINISH GRADE IN AREAS RECEIVING HYDROSEED
10. SCHEDULE 40 PVC ELBOW SXS
11. 2-WIRE LONG RANGE HEAVY DUTY DECODER CABLE WIRES; AS NEEDED. PROVIDE MINIMUM 18" COILED EXTRA.
12. SCHEDULE 40 PVC NIPPLE; LENGTH AS NEEDED
13. SCHEDULE 40 OR CLASS 315 MAINLINE. 18" MINIMUM COVER. SEE SPECIFICATIONS.
14. 3/4" CRUSHED ROCK, 6" DEPTH MINIMUM
15. SCHEDULE 80 PVC TEE (SXSXS)
16. 12" FROM HARDSCAPE
17. 1/4" GALVANIZED WIRE CLOTH
18. PVC CONDUIT COUPLERS; SOLVENT WELD TO CONDUIT PIPE ENDS. PROVIDE 4" CLEAR SPACE ABOVE CRUSHED ROCK
19. PVC SCHEDULE 40 CONDUIT, SIZE PER PLAN
20. PVC SCHEDULE 40 CONDUIT SWEEP; COUPLED BOTH ENDS
21. SAND BACKFILL, 6" ABOVE AND BELOW MAIN LINE
22. 2 WIRE DECODER, SEE IRRIGATION LEGEND FOR ADDITIONAL INFORMATION
23. LINE SIZE BALL VALVE

NTS

REMOTE CONTROL VALVE (SPRAY) | 2

Hydrozone 3; Medium water use vines; drip.			PR= 0.21
PF =	0.5		
HA =	4,893 (square feet)	0.112328 Acres	
IE =	0.9		
EWU =	86964.92 (gallons per year)	0.266886 acre-feet/year	116.2633 ccf/year

Total Estimated Water Use for All Hydrozones (EWU) - Sum

EWU = 1,031,070 (gallons per year) 3.164238 Acre-Feet per Year
1,378 (100 cubic feet per year) 0.031645 Acres

Estimated Water Use for Hydrozones (EWU) - Calculation

EWU = (ETo) (PF) (HA) (0.62) / (IE)

EWU = 1,031,070 Gallons per Year

Where:
LA = Total Landscape area (Square Feet)
HA = Hydrozone Landscape Area (Square Feet)
52.2 = Reference Evapotranspiration (ET_O) (Ref: AB325, Section495)
0.8 = ET_OAdjustment (Ref: CUWCC AB2717 Task Force Recommendation 13)
0.62 = Conversion factor from inches to gallons
748 = Gallons per hundred cubic foot (ccf)
325,851 = Gallons per acre-foot

0.2 = Plant Factor (KL) - Low
0.5 = Plant Factor (KL) - Medium
0.8 = Plant Factor (KL) - High, Turf

0.625 = Irrigation Efficiency - Rotors, Rotators, Spray
0.90 = Irrigation Efficiency - Bubblers, Surface Drip
0.90 = Irrigation Efficiency - Sub-surface Drip

WATER USE DOCUMENTATION

Highway 32 (Phase 1, El Monte to Highway 99)
Chico, California

MONTHLY IRRIGATION SCHEDULE
Irrigation Window = 8 Hours

Irrigation Schedule
Hydrozone 1; Low water use trees; drip.
Precipitation Rate = 0.21 inches per hour

Month	Jan	Feb	Mar	Apr	May	Jun	Jul	Aug	Sep	Oct	Nov	Dec
MIN / WEEK	17	29	42	70	87	110	122	105	50	53	24	14
DAYS / WEEK	2	2	2	3	3	4	5	4	3	3	2	2
MIN / WATER DAY	9	14	21	23	29	27	24	26	27	18	12	7
CYCLE / DAY	1	1	1	1	1	1	1	1	1	1	1	1
MIN / CYCLE	9	14	21	23	29	27	24	26	27	18	12	7
GAL / MONTH	10,804	17,943	26,910	43,727	54,922	68,847	76,530	65,726	50,249	33,313	14,886	9,004
C.F. / MONTH	1,444	2,399	3,491	5,846	7,342	9,204	10,231	8,787	6,717	4,454	1,990	1,204

Irrigation Schedule
Hydrozone 2; Low water use shrubs and ground cover; drip.
Precipitation Rate = 0.21 inches per hour

Month	Jan	Feb	Mar	Apr	May	Jun	Jul	Aug	Sep	Oct	Nov	Dec
MIN / WEEK	17	29	42	70	87	110	122	105	50	53	24	14
DAYS / WEEK	2	2	3	4	5	5	6	6	5	4	3	2
MIN / WATER DAY	9	14	14	17	17	22	20	17	16	13	8	7
CYCLE / DAY	1	1	1	1	1	1	1	1	1	1	1	1
MIN / CYCLE	9	14	14	17	17	22	20	17	16	13	8	7
GAL / MONTH	10,804	17,943	26,910	43,727	54,922	68,847	76,530	65,726	50,249	33,313	14,886	9,004
C.F. / MONTH	1,444	2,399	3,491	5,846	7,342	9,204	10,231	8,787	6,717	4,454	1,990	1,204

Irrigation Schedule
Hydrozone 3; Medium water use vines; drip.
Precipitation Rate = #REF! inches per hour

Month	Jan	Feb	Mar	Apr	May	Jun	Jul	Aug	Sep	Oct	Nov	Dec
MIN / WEEK	43	166	230	491	504	631	702	603	461	306	137	83
DAYS / WEEK	3	4	5	5	8	8	8	8	8	5	3	3
MIN / WATER DAY	14	41	48	80	84	105	117	101	77	61	46	28
CYCLE / DAY	1	1	1	1	1	1	1	1	1	1	1	1
MIN / CYCLE	14	41	48	80	84	105	117	101	77	61	46	28
GAL / MONTH	875	3,349	4,873	8,181	10,251	12,850	14,284	12,267	9,377	6,218	2,778	1,680
C.F. / MONTH	117	448	651	1,091	1,370	1,718	1,910	1,640	1,254	831	371	225

SHEET LS-2.10

STATE OF CALIFORNIA — DEPARTMENT OF TRANSPORTATION

CONSULTANT FUNCTIONAL SUPERVISOR: BRIAN FIRTH

CALCULATED-DESIGNED BY: B. FIRTH/ JBB
CHECKED BY: B. FIRTH

REVISED BY | DATE REVISED

LAST REVISION 00-00-00 | DATE PLOTTED => $DATE | TIME PLOTTED => $TIME

BORDER LAST REVISED 12-22-11 | USERNAME => $USER | DGN FILE => $REQUEST | RELATIVE BORDER SCALE IS IN INCHES 0 1 2 3 | UNIT 0000 | PROJECT NUMBER & PHASE 0300000261

DIST	COUNTY	ROUTE	POST MILES TOTAL PROJECT	SHEET No	TOTAL SHEETS
03	But	32	10.3/11.3	128	144

Po-Kang Chen 11/14/11
REGISTERED STRUCTURAL ENGINEER DATE

12/22/11
PLANS APPROVAL DATE

REGISTERED PROFESSIONAL ENGINEER PO-KANG CHEN No. S3112 Exp. 9/30/13 STRUCTURAL STATE OF CALIFORNIA

The State of California or its officers or agents shall not be responsible for the accuracy or completeness of scanned copies of this plan sheet.

MARK THOMAS & CO., INC.
7300 FOLSOM BLVD STE 203
SACRAMENTO, CA 95826

CITY OF CHICO
CAPITAL PROJECT SERVICES
411 MAIN STREET
CHICO, CA 95927

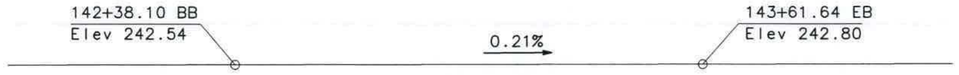

PROFILE GRADE
NO SCALE

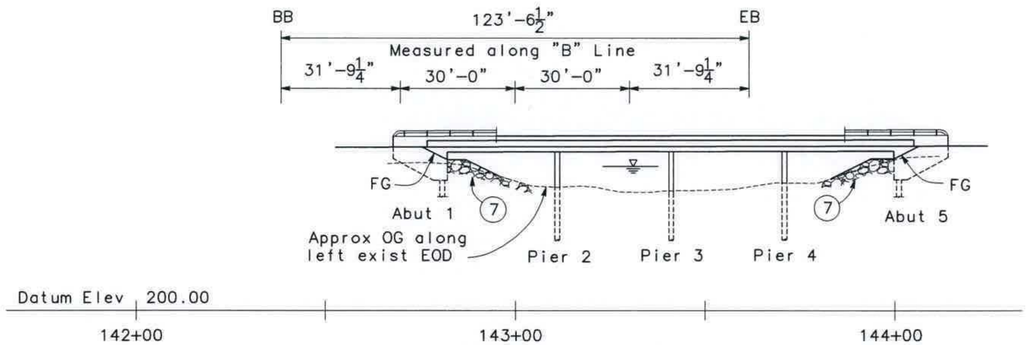

MIRROR ELEVATION
1" = 20'

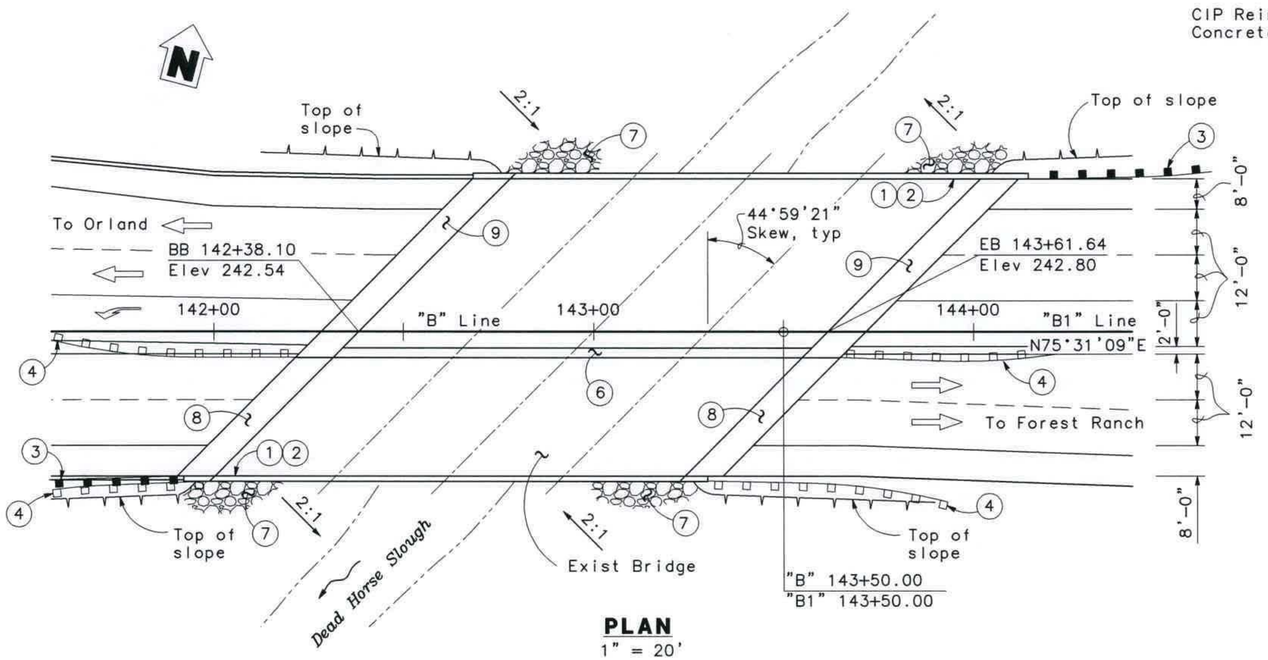

PLAN
1" = 20'

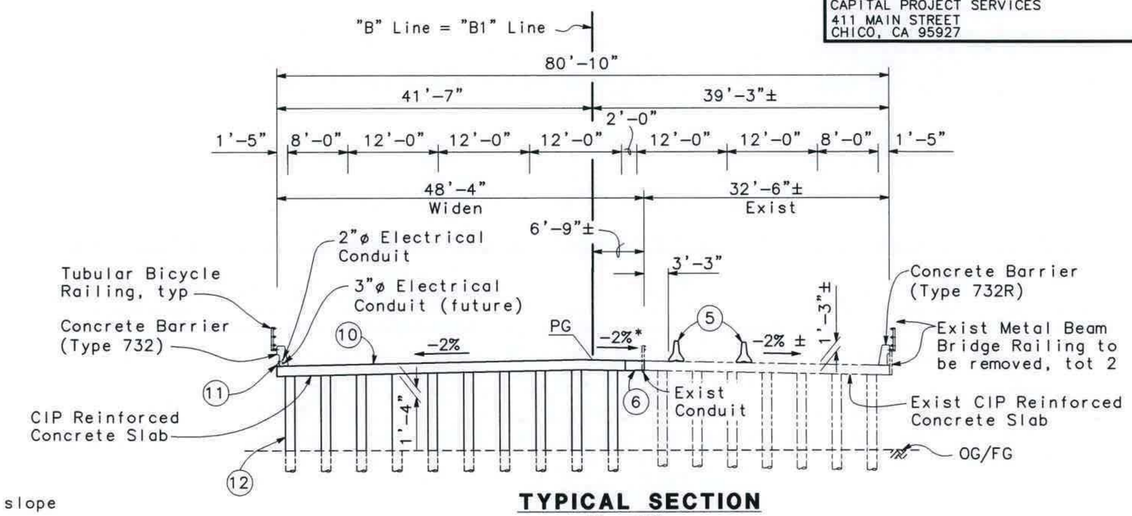

TYPICAL SECTION
1" = 10'

NOTES

1. Paint "Dead Horse Slough Bridge"
2. Paint "BR. NO. 12-0135"
3. MBGR, see "Road Plans"
4. Existing MBGR to be removed, see "Road Plans"
5. Temporary Rail (Type K), see "Road Plans"
6. 2'-6" Closure Pour
7. Rock Slope Protection, see "Road Plans"
8. Structure Approach R(10D)
9. Structure Approach EQ(10)
10. Clean and Treat Bridge Deck
11. Irrigation Supply and Sprinkler Control Conduits
12. 15" PC P/S Pile Extension

For Index to Plans, General Notes & Quantities, see "Deck Contours" sheet.

For Hydrologic Summary, see "Foundation Plan" sheet.

The Contractor shall verify all controlling field dimensions before ordering or fabricating any material.

* Cross slope to conform to edge of deck of existing bridge

INDEX TO PLANS

SHEET NO.	TITLE
1	GENERAL PLAN
2	DECK CONTOURS
3	FOUNDATION PLAN
4	ABUTMENT LAYOUT
5	ABUTMENT DETAILS
6	PIER LAYOUT
7	TYPICAL SECTION
8	SLAB REINFORCEMENT
9	SLAB REINFORCEMENT DETAILS
10	TUBULAR BICYCLE RAILING
11	STRUCTURE APPROACH TYPE EQ(10)
12	STRUCTURE APPROACH TYPE R(10D)
13	LOG OF TEST BORINGS 1 OF 5
14	LOG OF TEST BORINGS 2 OF 5
15	LOG OF TEST BORINGS 3 OF 5
16	LOG OF TEST BORINGS 4 OF 5
17	LOG OF TEST BORINGS 5 OF 5

LEGEND

---- Indicates Existing Bridge

Cris Fredericksen
DESIGN OVERSIGHT 11-21-11
SIGN OFF DATE

	BY	CHECKED			
DESIGN	T. PHAM	T. WALKER	LOAD & RESISTANCE FACTOR DESIGN	LIVE LOADING: HL93 W/"LOW-BOY"; PERMIT DESIGN VEHICLE	
DETAILS	G. BOYKO	T. WALKER	LAYOUT	E. WEEKS	T. PHAM
QUANTITIES	T. PHAM	E. WEEKS	SPECIFICATIONS	L.A.SCHREY	L.A.SCHREY

PREPARED FOR THE STATE OF CALIFORNIA DEPARTMENT OF TRANSPORTATION

JULIE PASSALACQUA
PROJECT ENGINEER

BRIDGE NO. 12-0135
POST MILES 11.08

DEAD HORSE SLOUGH BRIDGE (WIDEN)
GENERAL PLAN

DESIGN GENERAL PLAN SHEET (ENGLISH) (REV. 06-01-09)

ORIGINAL SCALE IN INCHES FOR REDUCED PLANS 0 1 2 3

CU 03 1E4901
EA 03 0000 0264

DISREGARD PRINTS BEARING EARLIER REVISION DATES

REVISION DATES (PRELIMINARY STAGE ONLY): 09/21/09 01/18/11 05/18/11 06/20/11 11/14/11 08/02/10 09/18/10 09/21/10 10/18/10

SHEET 1 OF 17

DIST	COUNTY	ROUTE	POST MILES TOTAL PROJECT	SHEET No	TOTAL SHEETS
03	But	32	10.3/11.3	129	144

Po-Kang Chen 11/14/11
REGISTERED STRUCTURAL ENGINEER DATE

12/22/11
PLANS APPROVAL DATE

REGISTERED PROFESSIONAL ENGINEER PO-KANG CHEN No. S3112 Exp. 9/30/13 STRUCTURAL STATE OF CALIFORNIA

The State of California or its officers or agents shall not be responsible for the accuracy or completeness of scanned copies of this plan sheet.

MARK THOMAS & CO., INC.
7300 FOLSOM BLVD STE 203
SACRAMENTO, CA 95826

CITY OF CHICO
CAPITAL PROJECT SERVICES
411 MAIN STREET
CHICO, CA 95927

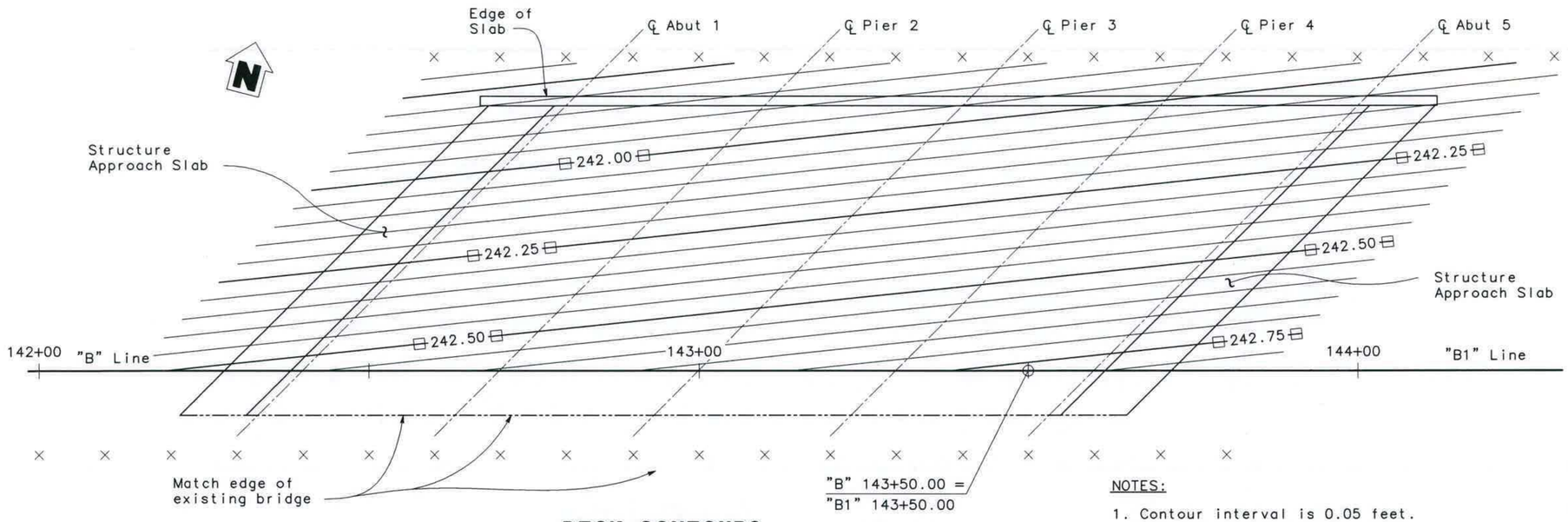

DECK CONTOURS

1" = 10'

NOTES:

1. Contour interval is 0.05 feet.
2. Contours do not include camber or falsework settlement/camber.
3. × – Indicates 10 foot intervals.
4. □ – Indicates quarter foot contour.

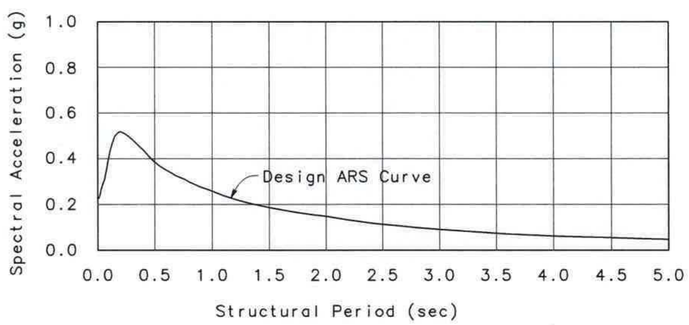

ARS CURVE

(5% Damping)

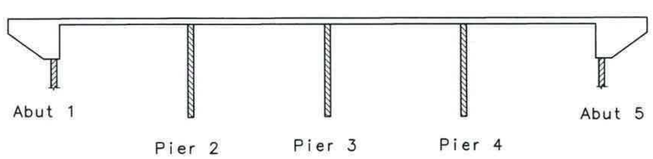

Structural Concrete, Bridge

Precast Prestressed Pile, see "Pier Layout" sheet

Standard Plan B2-5 Pile

CONCRETE STRENGTH AND TYPE LIMITS

NO SCALE

GENERAL NOTES
LOAD AND RESISTANCE FACTOR DESIGN

DESIGN:
AASHTO LRFD Bridge Design Specifications, 4th edition and the Catrans Amendments, preface dated December 2008; except that bridge (incl. barrier and railing) details taken from Standard Plans March 2006 and earlier versions, Standard Bridge Details XS sheets are designed using Bridge Design Specifications.

SEISMIC DESIGN:
Caltrans Seismic Design Criteria (SDC), Version 1.5 dated September 2009.

DEAD LOAD:
Includes 35 psf for future wearing surface.

LIVE LOADING:
HL93 and permit design Load.

SEISMIC LOADING:
Soil Profile: Vs30 = 325 m/s
Moment Magnitude: 6.5
Peak Ground Acceleration 0.23g
See ARS Curve

CONCRETE:
fy = 60 ksi
f'c = 3.6 ksi unless otherwise noted
n = 8

PILES:
See Pile Data Table on "Foundation Plan" sheet

QUANTITIES

CLEAN BRIDGE DECK	5,972	SF
BRIDGE REMOVAL (PORTION)	1	LS
STRUCTURE EXCAVATION (BRIDGE)	196	CY
STRUCTURE BACKFILL (BRIDGE)	82	CY
AGGREGATE BASE (APPROACH SLAB)	2	CY
FURNISH PILING (CLASS 90) (ALTERNATIVE X)	700	LF
DRIVE PILE (CLASS 90) (ALTERNATIVE X)	16	EA
FURNISH PILING (15" PRECAST PILE EXTENSION)	1,596	LF
DRIVE PILE (15" PRECAST PILE EXTENSION)	30	EA
STRUCTURAL CONCRETE, BRIDGE	442	CY
STRUCTURAL CONCRETE, APPROACH SLAB (TYPE EQ)	26	CY
STRUCTURAL CONCRETE, APPROACH SLAB (TYPE R)	18	CY
PAVING NOTCH EXTENSION	112	CF
DRILL AND BOND DOWEL	432	LF
DRILL AND BOND DOWEL (CHEMICAL ADHESIVE)	123	EA
JOINT SEAL (MR ½")	229	LF
BAR REINFORCING STEEL (BRIDGE)	102,342	LB
TREAT BRIDGE DECK	5,972	SF
FURNISH BRIDGE DECK TREATMENT MATERIAL	67	GAL
TUBULAR BICYCLE RAILING	288	LF
CONCRETE BARRIER (TYPE 732R)	141	LF
CONCRETE BARRIER (TYPE 732)	147	LF

STANDARD PLANS DATED MAY, 2006

A10A & A10B	ACRONYMS AND ABBREVIATIONS
A10C & A10D	SYMBOLS
A62C	LIMITS OF PAYMENT FOR EXCAVATION AND BACKFILL – BRIDGE
B0-1	BRIDGE DETAILS
B0-3	BRIDGE DETAILS
B0-5	BRIDGE DETAILS
B2-5	PILE DETAILS CLASS 90 AND CLASS 140
RSP B6-21	JOINT SEALS (MAXIMUM MOVEMENT RATING = 2")
B11-55	CONCRETE BARRIER TYPE 732
B14-3	COMMUNICATION AND SPRINKLER CONTROL CONDUITS (CONDUIT LESS THAN 4")
H9	PLANTING AND IRRIGATION DETAILS

Standard Plan Sheet No.
Detail No.

Eric Fredstrom
DESIGN OVERSIGHT
11-21-11
SIGN OFF DATE

	BY	CHECKED
DESIGN	T. Pham	T. Walker
DETAILS	G. Boyko	T. Walker
QUANTITIES	T. Pham	E. Weeks

PREPARED FOR THE STATE OF CALIFORNIA DEPARTMENT OF TRANSPORTATION

JULIE PASSALACQUA
PROJECT ENGINEER

BRIDGE NO. 12-0135
POST MILES 11.08

DEAD HORSE SLOUGH BRIDGE (WIDEN)
DECK CONTOURS

DESIGN DETAIL SHEET (ENGLISH) (REV. 06-01-09)

ORIGINAL SCALE IN INCHES FOR REDUCED PLANS 0 1 2 3

CU 03
EA 1E4901

DISREGARD PRINTS BEARING EARLIER REVISION DATES

REVISION DATES (PRELIMINARY STAGE ONLY) 07/23/10 07/28/10 08/02/10 09/30/10 10/18/10 10/27/10 05/24/11 11/14/11

SHEET 2 OF 17

TIME PLOTTED → 8:11AM
DATE PLOTTED → 8-NOV-2011
FILENAME → 8:11PM

DIST	COUNTY	ROUTE	POST MILES TOTAL PROJECT	SHEET No	TOTAL SHEETS
03	But	32	10.3/11.3	130	144

Po-Kang Chen 11/14/11
REGISTERED STRUCTURAL ENGINEER DATE

12/22/11
PLANS APPROVAL DATE

REGISTERED PROFESSIONAL ENGINEER PO-KANG CHEN No. S3112 Exp. 9/30/13 STRUCTURAL STATE OF CALIFORNIA

The State of California or its officers or agents shall not be responsible for the accuracy or completeness of scanned copies of this plan sheet.

MARK THOMAS & CO., INC.
7300 FOLSOM BLVD STE 203
SACRAMENTO, CA 95826

CITY OF CHICO
CAPITAL PROJECT SERVICES
411 MAIN STREET
CHICO, CA 95927

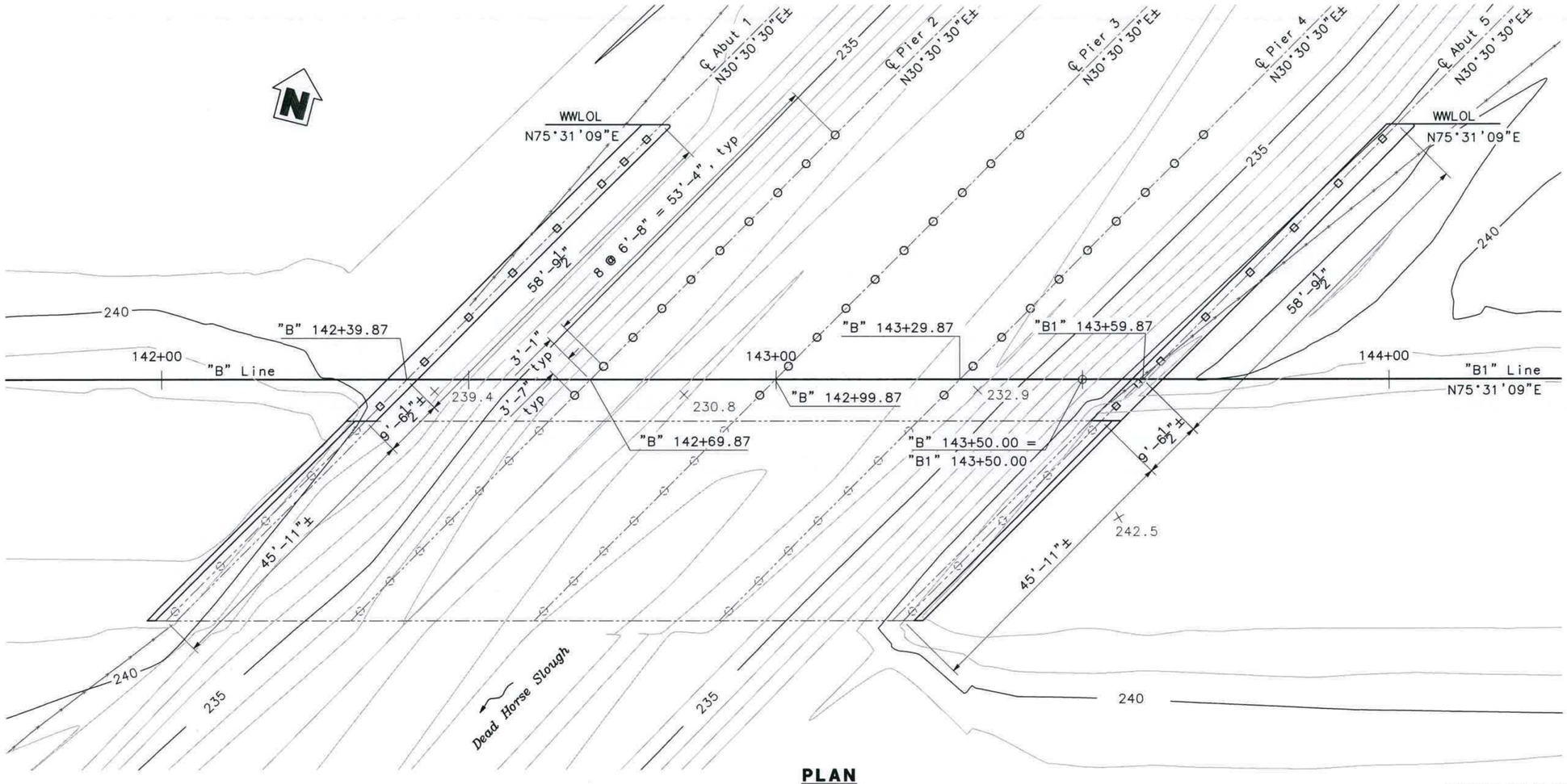

PLAN
1" = 10'

NOTE:

1. Alignment of widening bridge, ℄ Abutments & ℄ Piers to match alignment of the existing bridge Abutments & Piers.
2. For Abutment pile spacing, see "Abutment Layout" sheet.
3. Rock slope protection not shown.

BENCHMARKS

P1434 (PID: KS1933) NGS cap on rod in monument well at east 8th & Linden.
Elev 210.91

TBM #34 Set mag nail in AC at northerly shoulder SR 32.
Elev 242.16

TBM #31 Set mag nail in AC at northerly shoulder SR 32.
Elev 246.28

LEGEND:

- ○ □ Indicates Driven Pile
- ○ Indicates Existing Pile
- ——— Indicates Existing Structure

PILE DATA TABLE

Location	Pile Type	Nominal Resistance (kip)		Design Tip Elevations (ft)	Specified Tip Elevations (ft)	Nominal Driving Resistance (kips)
		Compression	Tension			
Abut 1	Class 90 (Alt. X)	180	0	190.0 (a), 190.0 (b), 206.0 (c)	190.0	180
Pier 2	15" PC/PS Pile Extensions	200	0	188.0 (a), 188.0 (b), 196.0 (c)	188.0	200
Pier 3	15" PC/PS Pile Extensions	180	0	188.0 (a), 188.0 (b), 196.0 (c)	188.0	180
Pier 4	15" PC/PS Pile Extensions	200	0	188.0 (a), 188.0 (b), 196.0 (c)	188.0	200
Abut 5	Class 90 (Alt. X)	180	0	190.0 (a), 190.0 (b), 206.0 (c)	190.0	180

Notes:
1. Design Tip Elevations for Abutments are controlled by (a) Compression, (b) Scour, (c) Lateral, respectively.
2. Design Tip Elevations for Piers are controlled by (a) Compression (Strength Limit), (b) Scour, and (c) Lateral, respectively.
3. The nominal driving resistance required is equal to the required nominal resistance needed to support the factored load plus driving resistance from the penetrated soil layers, if any, which do not contribute to the required nominal resistance due to scour.

HYDROLOGIC SUMMARY

Drainage Area: 5.2 Square Miles

	Design Flood	Base Flood	Overtopping Flood
Frequency (Years)	50	100	200
Discharge (Cubic Foot per Sec)	1500	1900	2200
Water Surface (Elevation at Bridge)	237.24	237.96	238.49

Flood plain data are based upon information available when the plans were prepared and are shown to meet federal requirements. The accuracy of said information is not warranted by the State and interested or affected parties should make their own investigation.

Note: The Contractor shall verify all controlling field dimensions before ordering or fabricating any material.

GEOTECHNICAL PROFESSIONAL APPROVAL DATE 11-21-11

Eric Fredstrom
DESIGN OVERSIGHT
11-21-11
SIGN OFF DATE

SCALE: No Scale	VERT.DATUM NAVD 88	HORZ.DATUM CCS83(1991.35)Z2	
PHOTOGRAMMETRY AS OF: 5/20/05	ALIGNMENT TIES		
SURVEYED BY M. Stringer	DRAFTED BY G. Boyko		
FIELD CHECKED BY O. Senda	CHECKED BY T. Pham		

	BY	CHECKED
DESIGN	T. Pham	T. Walker
DETAILS	G. Boyko	T. Walker
QUANTITIES	T. Pham	E. Weeks

PREPARED FOR THE STATE OF CALIFORNIA DEPARTMENT OF TRANSPORTATION

JULIE PASSALACQUA
PROJECT ENGINEER

BRIDGE NO. 12-0135
POST MILES 11.08

DEAD HORSE SLOUGH BRIDGE (WIDEN)
FOUNDATION PLAN

FOUNDATION PLAN SHEET (ENGLISH) (REV. 06-01-09)

ORIGINAL SCALE IN INCHES FOR REDUCED PLANS 0 1 2 3

CU 03
EA 1E4901

DISREGARD PRINTS BEARING EARLIER REVISION DATES

REVISION DATES (PRELIMINARY STAGE ONLY): 09/28/06 11/14/11 06/28/10 07/28/10 08/02/10 08/16/10 09/27/10 10/18/10 10/27/10

SHEET 3 OF 17

FILENAME = BHCFD2 TIME PLOTTED = 8:11AM DATE PLOTTED = 8-NOV-2011

DIST	COUNTY	ROUTE	POST MILES TOTAL PROJECT	SHEET No.	TOTAL SHEETS
03	But	32	10.3/11.3	131	144

Po-Kang Chen 11/14/11
REGISTERED STRUCTURAL ENGINEER DATE

12/22/11
PLANS APPROVAL DATE

REGISTERED PROFESSIONAL ENGINEER PO-KANG CHEN No. S3112 Exp. 9/30/13 STRUCTURAL STATE OF CALIFORNIA

The State of California or its officers or agents shall not be responsible for the accuracy or completeness of scanned copies of this plan sheet.

MARK THOMAS & CO., INC.
7300 FOLSOM BLVD STE 203
SACRAMENTO, CA 95826

CITY OF CHICO
CAPITAL PROJECT SERVICES
411 MAIN STREET
CHICO, CA 95927

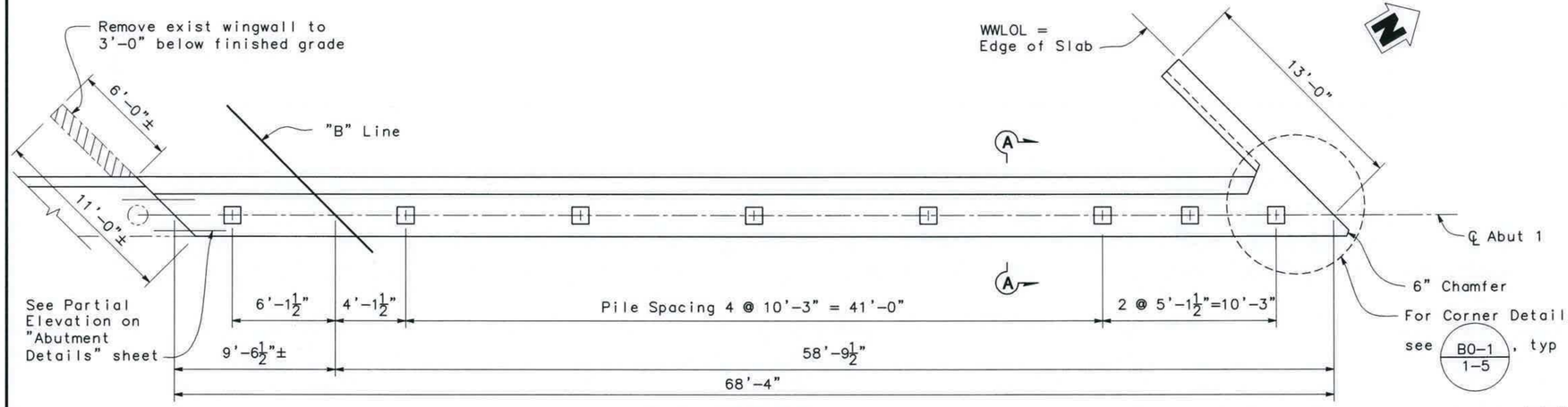

PLAN - ABUTMENT 1
1/4" = 1'-0"

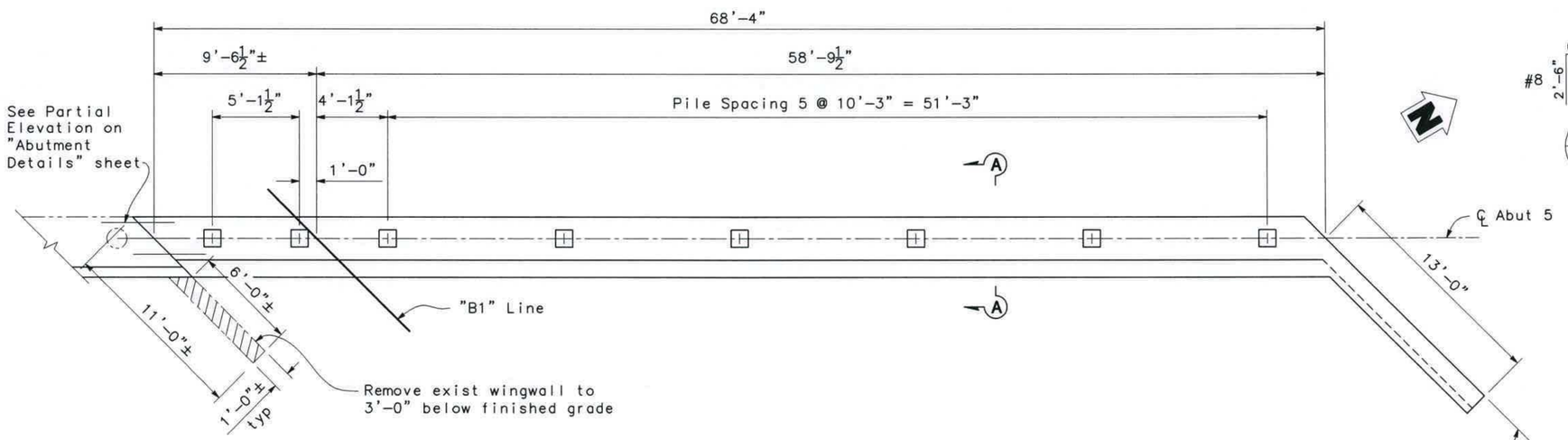

PLAN - ABUTMENT 5
1/4" = 1'-0"

LEGEND:

Indicates Bridge Removal (Portion)

Indicates Existing Bridge

Note: The Contractor shall verify all controlling field dimensions before ordering or fabricating any material.

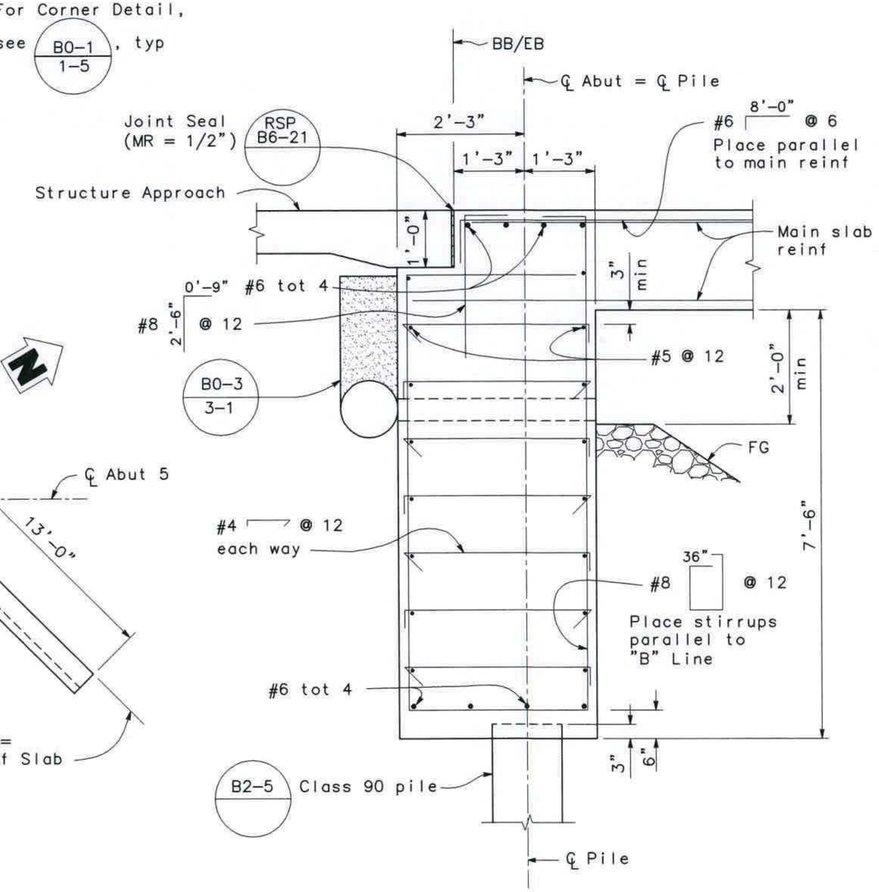

Note: Main Slab reinf not shown

SECTION A-A
3/4" = 1'-0"

DESIGN OVERSIGHT 11-21-11	DESIGN	BY T. Pham	CHECKED T. Walker
SIGN OFF DATE	DETAILS	BY G. Boyko	CHECKED T. Walker
	QUANTITIES	BY T. Pham	CHECKED E. Weeks

PREPARED FOR THE STATE OF CALIFORNIA DEPARTMENT OF TRANSPORTATION

JULIE PASSALACQUA
PROJECT ENGINEER

BRIDGE NO. 12-0135
POST MILES 11.08

DEAD HORSE SLOUGH BRIDGE (WIDEN)
ABUTMENT LAYOUT

DESIGN DETAIL SHEET (ENGLISH) (REV. 06-01-09)

ORIGINAL SCALE IN INCHES FOR REDUCED PLANS 0 1 2 3

CU 03
EA 1E4901

DISREGARD PRINTS BEARING EARLIER REVISION DATES

REVISION DATES (PRELIMINARY STAGE ONLY): 06/17/10 06/30/10 07/28/10 07/29/10 09/18/10 09/21/10 10/18/10 11/14/11

SHEET 4 OF 17

DIST	COUNTY	ROUTE	POST MILES TOTAL PROJECT	SHEET No	TOTAL SHEETS
03	But	32	10.3/11.3	132	144

PO-Kang Chen 11/14/11
REGISTERED STRUCTURAL ENGINEER DATE

12/22/11
PLANS APPROVAL DATE

REGISTERED PROFESSIONAL ENGINEER PO-KANG CHEN No. S3112 Exp. 9/30/13 STRUCTURAL STATE OF CALIFORNIA

The State of California or its officers or agents shall not be responsible for the accuracy or completeness of scanned copies of this plan sheet.

MARK THOMAS & CO., INC.
7300 FOLSOM BLVD STE 203
SACRAMENTO, CA 95826

CITY OF CHICO
CAPITAL PROJECT SERVICES
411 MAIN STREET
CHICO, CA 95927

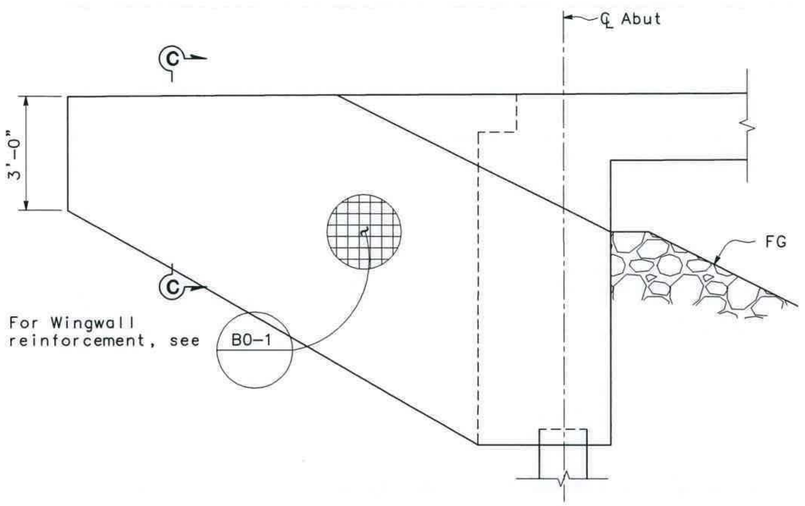

ELEVATION - NORTH WINGWALLS
NO SCALE

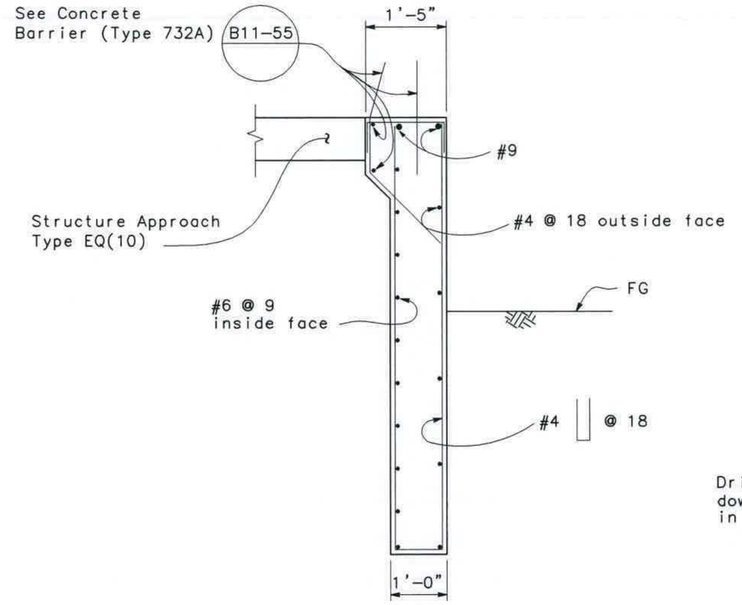

SECTION C-C
NO SCALE

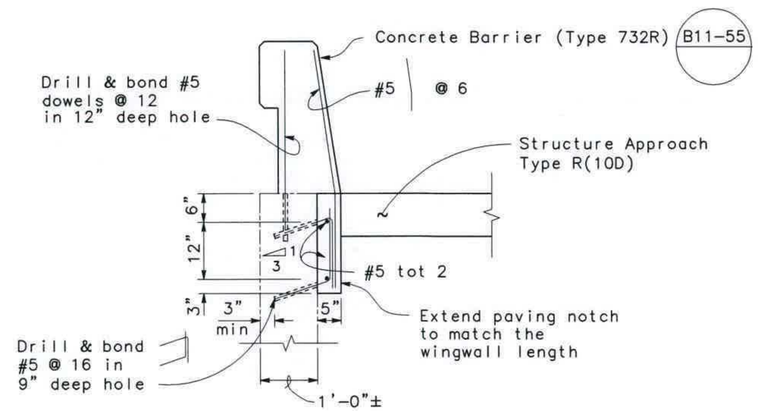

EXIST SOUTH WINGWALLS
NO SCALE

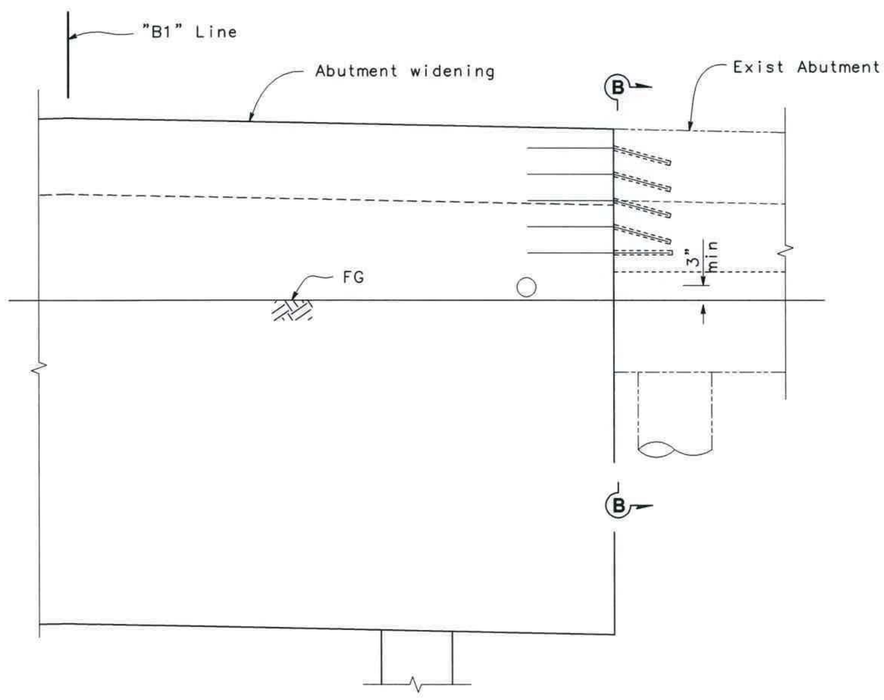

Note: Abutment 5 shown, Abutment 1 similar.

PARTIAL ELEVATION
3/4" = 1'-0"

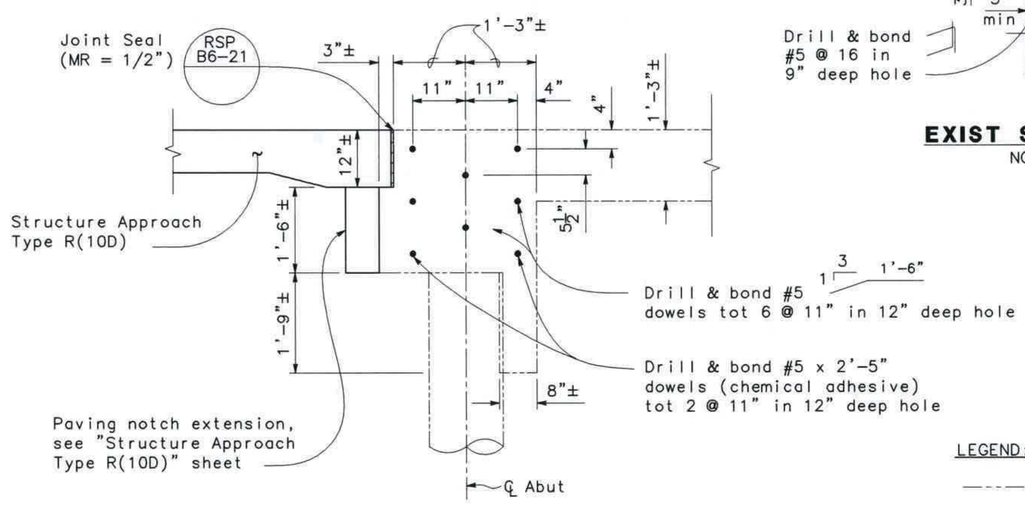

SECTION B-B
3/4" = 1'-0"

LEGEND:

- - - - Indicates Existing Bridge

Note: The Contractor shall verify all controlling field dimensions before ordering or fabricating any material.

Eric Fredriksen DESIGN OVERSIGHT 11-21-11 SIGN OFF DATE	DESIGN	BY T. Pham	CHECKED T. Walker	PREPARED FOR THE STATE OF CALIFORNIA DEPARTMENT OF TRANSPORTATION	JULIE PASSALACQUA PROJECT ENGINEER	BRIDGE NO. 12-0135
	DETAILS	BY G. Boyko	CHECKED T. Walker			POST MILES 11.08
	QUANTITIES	BY T. Pham	CHECKED E. Weeks			

DEAD HORSE SLOUGH BRIDGE (WIDEN)
ABUTMENT DETAILS

DESIGN DETAIL SHEET (ENGLISH) (REV. 06-01-09)

ORIGINAL SCALE IN INCHES FOR REDUCED PLANS 0 1 2 3

CU 03
EA 1E4901

DISREGARD PRINTS BEARING EARLIER REVISION DATES

REVISION DATES (PRELIMINARY STAGE ONLY) 06/11/10 06/20/10 06/30/10 09/15/10 09/21/10 10/18/10 10/27/10 11/14/11

SHEET 5 OF 17

DIST	COUNTY	ROUTE	POST MILES TOTAL PROJECT	SHEET No	TOTAL SHEETS
03	But	32	10.3/11.3	133	144

Po-Kang Chen 11/14/11
REGISTERED STRUCTURAL ENGINEER DATE

12/22/11
PLANS APPROVAL DATE

REGISTERED PROFESSIONAL ENGINEER PO-KANG CHEN No. S3112 Exp. 9/30/13 STRUCTURAL STATE OF CALIFORNIA

The State of California or its officers or agents shall not be responsible for the accuracy or completeness of scanned copies of this plan sheet.

MARK THOMAS & CO., INC.
7300 FOLSOM BLVD STE 203
SACRAMENTO, CA 95826

CITY OF CHICO
CAPITAL PROJECT SERVICES
411 MAIN STREET
CHICO, CA 95927

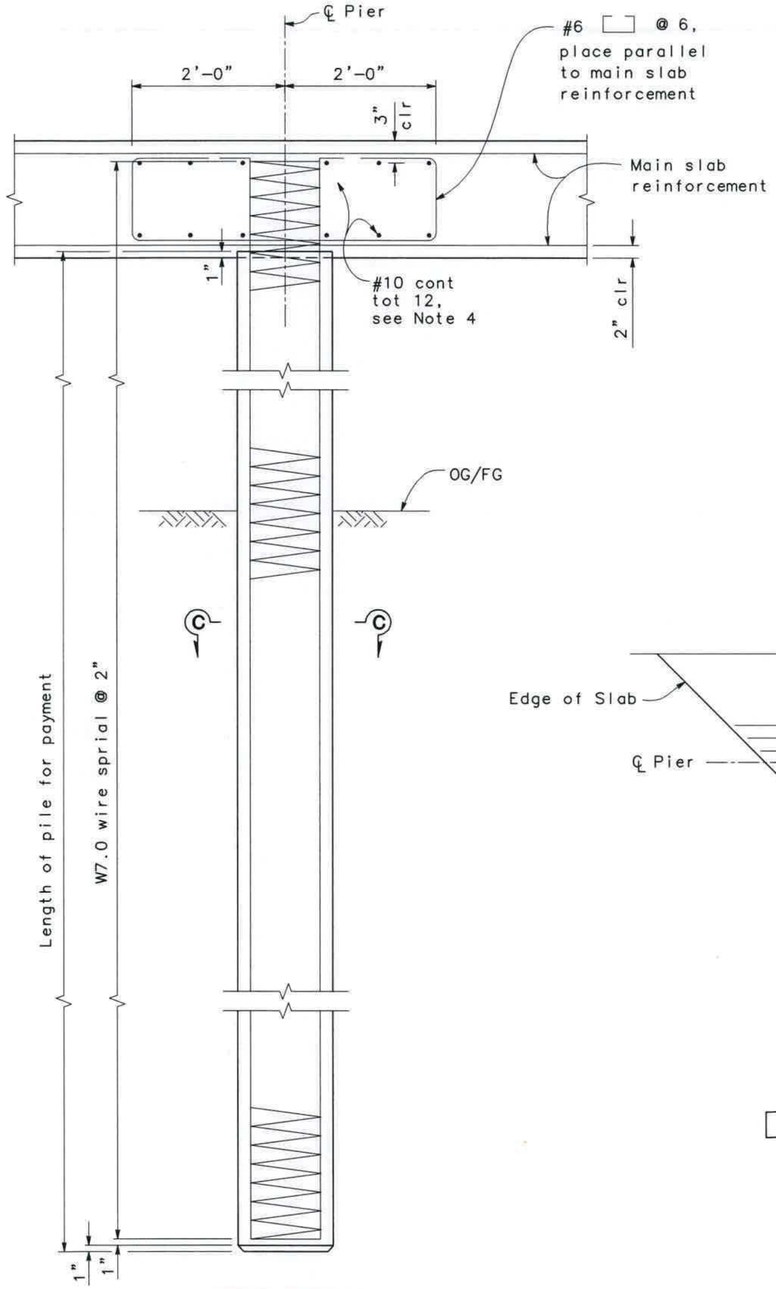

PIER DETAIL
1" = 1'-0"

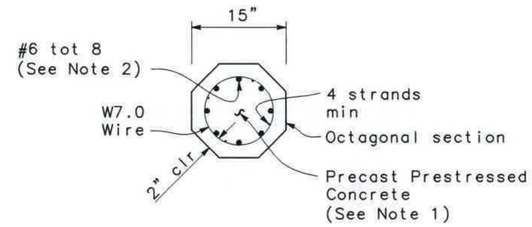

SECTION C-C
1" = 1'-0"

NOTES:

1. For the prestressed concrete pile:
   A. The prestress force after all losses shall provide 0.725 ksi minimum stress and shall not be less than 130 kip.
   B. The concrete strength shall not be less than 4.0 ksi at transfer and 6.0 ksi at 28 days.
2. No splices allowed in longitudinal pile reinforcement. Field bend hooks.
3. Lapped splices in spiral pile reinforcement shall be lapped 80 wire diameters minimum. Spiral pile reinforcement at splices and at ends shall be terminated by a 135° hook with 6" tail hooked around a longitudinal bar or strand.
4. No splices allowed in main cap reinforcement.
5. The Contractor shall verify all controlling field dimensions before ordering or fabricating any material.

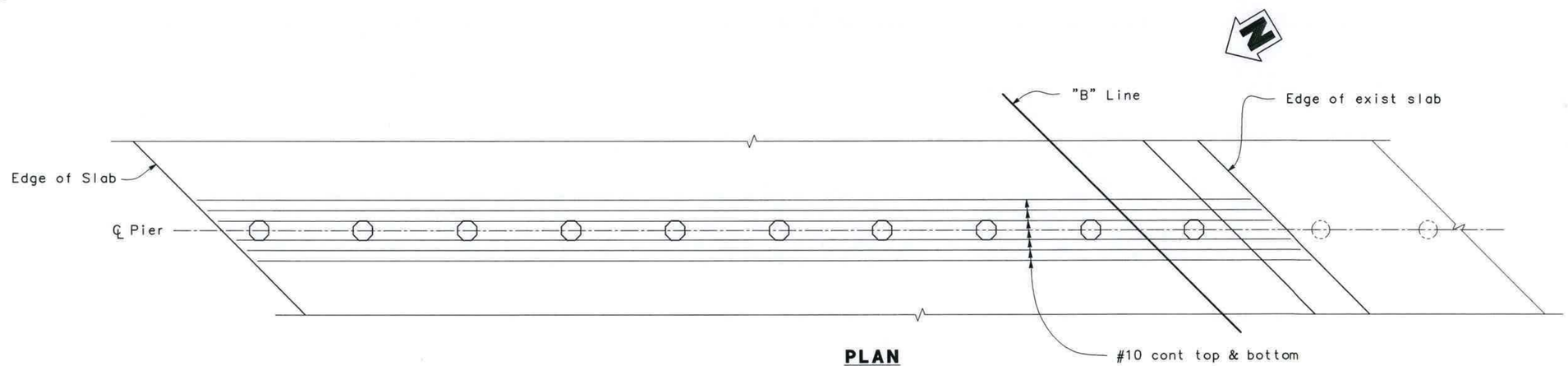

PLAN
1/4" = 1'-0"

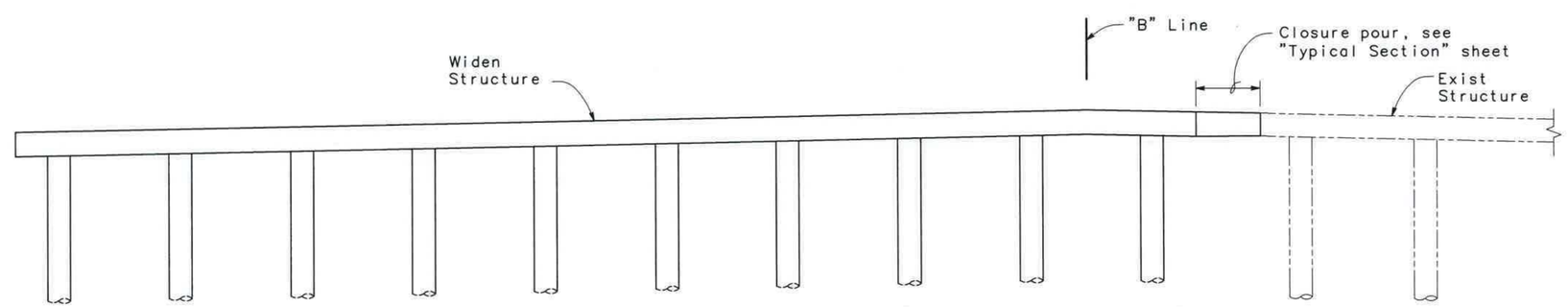

ELEVATION
1/4" = 1'-0"

DESIGN OVERSIGHT 11-21-11 SIGN OFF DATE	DESIGN	BY T. Pham	CHECKED T. Walker	PREPARED FOR THE STATE OF CALIFORNIA DEPARTMENT OF TRANSPORTATION	JULIE PASSALACQUA PROJECT ENGINEER
	DETAILS	BY G. Boyko	CHECKED T. Walker		
	QUANTITIES	BY T. Pham	CHECKED E. Weeks		

BRIDGE NO. 12-0135
POST MILES 11.08

DEAD HORSE SLOUGH BRIDGE (WIDEN)
PIER LAYOUT

DESIGN DETAIL SHEET (ENGLISH) (REV. 06-01-09)

ORIGINAL SCALE IN INCHES FOR REDUCED PLANS 0 1 2 3

CU 03
EA 1E4901

DISREGARD PRINTS BEARING EARLIER REVISION DATES

REVISION DATES (PRELIMINARY STAGE ONLY): 06/22/10 07/20/10 07/26/10 09/15/10 10/18/10 10/27/10 05/13/11 11/14/11

SHEET 6 OF 17

DIST	COUNTY	ROUTE	POST MILES TOTAL PROJECT	SHEET No	TOTAL SHEETS
03	But	32	10.3/11.3	134	144

PO-Kang Chen 11/14/11
REGISTERED STRUCTURAL ENGINEER DATE

12/22/11
PLANS APPROVAL DATE

REGISTERED PROFESSIONAL ENGINEER PO-KANG CHEN No. S3112 Exp. 9/30/13 STRUCTURAL STATE OF CALIFORNIA

The State of California or its officers or agents shall not be responsible for the accuracy or completeness of scanned copies of this plan sheet.

MARK THOMAS & CO., INC.
7300 FOLSOM BLVD STE 203
SACRAMENTO, CA 95826

CITY OF CHICO
CAPITAL PROJECT SERVICES
411 MAIN STREET
CHICO, CA 95927

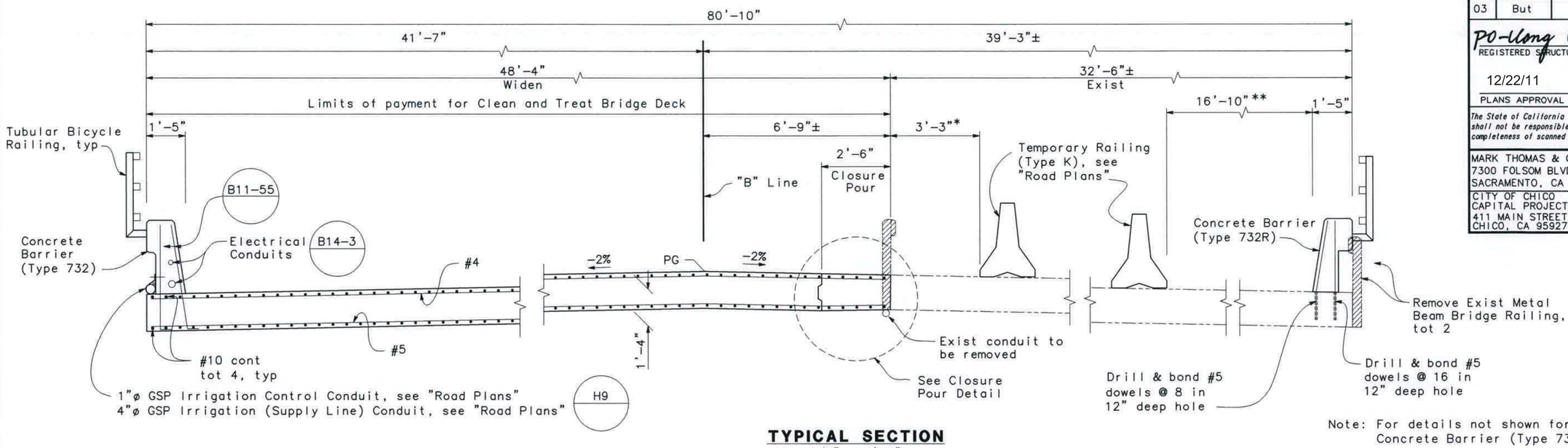

TYPICAL SECTION
1/2" = 1'-0"

Note: For details not shown for Concrete Barrier (Type 732R), see B11-55

* Stage 1 Construction, see "Road Plans"
** Stage 2A Construction, see "Road Plans"

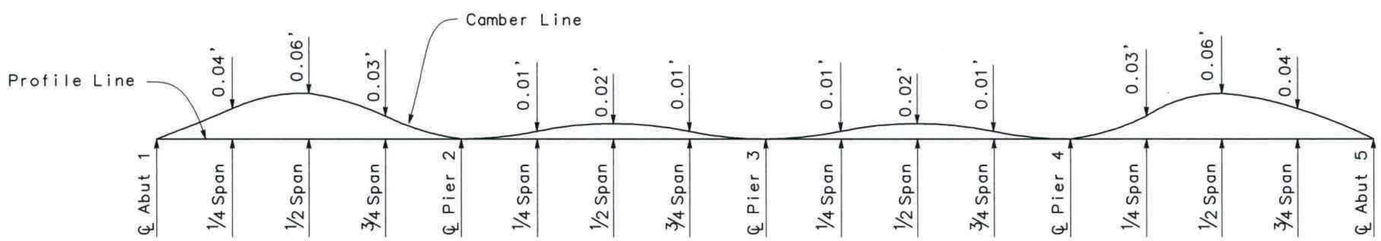

Note: Does not include allowance for falsework settlement or deflection.

CAMBER DIAGRAM
NO SCALE

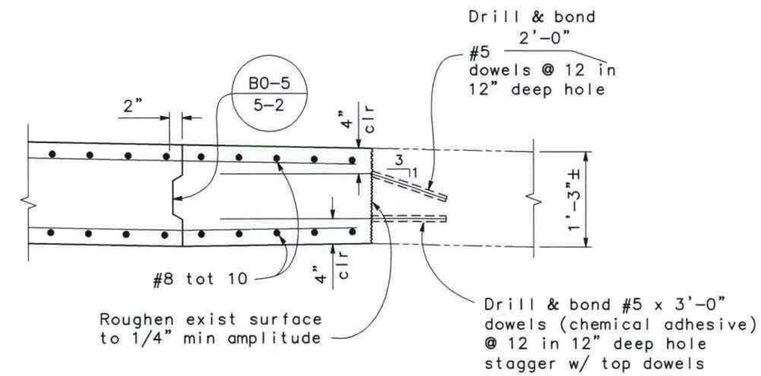

CLOSURE POUR DETAIL
2" = 1'-0"

FALSEWORK RELEASE NOTES

Alternative 1:
Falsework shall be released as soon as permitted by the specifications. Closure pour shall not be placed sooner than 60 days after the false work has been released.

Alternative 2:
Falsework shall not be released less than 28 days after the last concrete has been placed. Closure pour shall not be placed sooner than 14 days after the falsework has been released. When the falsework release Alternative 2 is used, camber values are 0.75 times those shown.

Note: The Contractor shall verify all controlling field dimensions before ordering or fabricating any material.

LEGEND:

Indicates Bridge Removal (Portion)

Indicates Existing Bridge

DESIGN OVERSIGHT 11-21-11 SIGN OFF DATE	DESIGN	BY T. Pham	CHECKED T. Walker	PREPARED FOR THE STATE OF CALIFORNIA DEPARTMENT OF TRANSPORTATION	JULIE PASSALACQUA PROJECT ENGINEER
	DETAILS	BY G. Boyko	CHECKED T. Walker		
	QUANTITIES	BY T. Pham	CHECKED E. Weeks		

BRIDGE NO. 12-0135
POST MILES 11.08

DEAD HORSE SLOUGH BRIDGE (WIDEN)
TYPICAL SECTION

DESIGN DETAIL SHEET (ENGLISH) (REV. 06-01-09)

ORIGINAL SCALE IN INCHES FOR REDUCED PLANS 0 1 2 3

CU 03
EA 1E4901

DISREGARD PRINTS BEARING EARLIER REVISION DATES

REVISION DATES (PRELIMINARY STAGE ONLY) 06/30/10 07/20/10 08/02/10 09/16/10 09/21/10 10/18/10 10/27/10 05/16/11 05/24/11 11/14/11

SHEET 7 OF 17

DIST	COUNTY	ROUTE	POST MILES TOTAL PROJECT	SHEET No	TOTAL SHEETS
03	But	32	10.3/11.3	135	144

Po-Kang Chen 11/14/11
REGISTERED STRUCTURAL ENGINEER DATE

12/22/11
PLANS APPROVAL DATE

REGISTERED PROFESSIONAL ENGINEER PO-KANG CHEN No. S3112 Exp. 9/30/13 STRUCTURAL STATE OF CALIFORNIA

The State of California or its officers or agents shall not be responsible for the accuracy or completeness of scanned copies of this plan sheet.

MARK THOMAS & CO., INC.
7300 FOLSOM BLVD STE 203
SACRAMENTO, CA 95826

CITY OF CHICO
CAPITAL PROJECT SERVICES
411 MAIN STREET
CHICO, CA 95927

NOTES:

1. The Contractor shall verify all controlling field dimensions before ordering or fabricating any material.
2. No splices allowed in #7, #8 and #9 main top and bottom reinforcement.

LEGEND:

——-- Indicates Existing Bridge

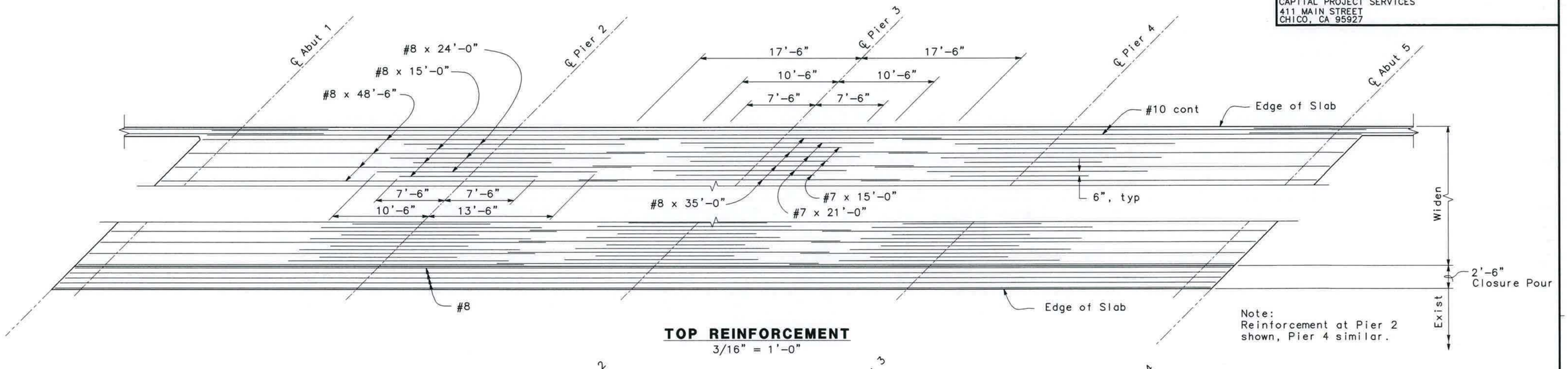

Note:
Reinforcement at Pier 2 shown, Pier 4 similar.

TOP REINFORCEMENT
3/16" = 1'-0"

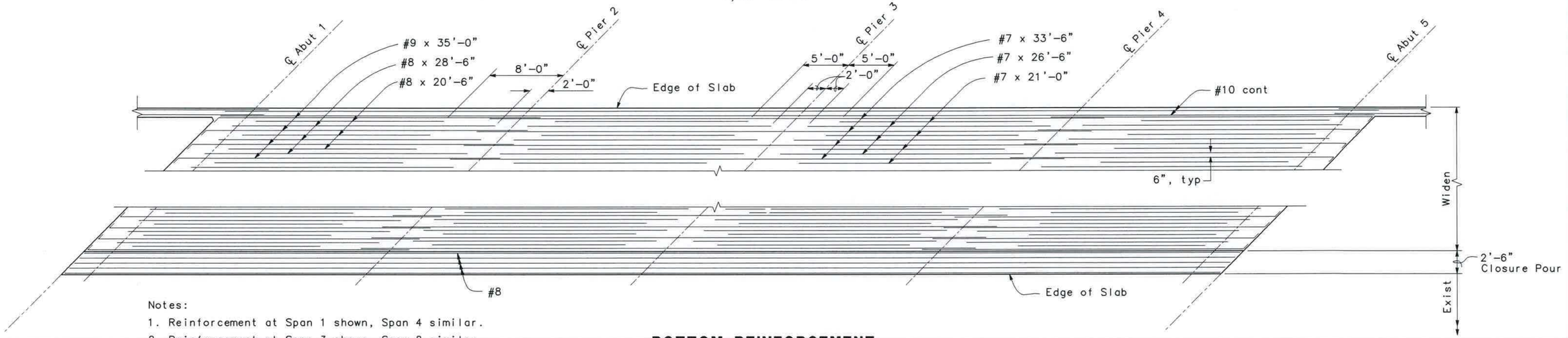

Notes:

1. Reinforcement at Span 1 shown, Span 4 similar.
2. Reinforcement at Span 3 shown, Span 2 similar.

BOTTOM REINFORCEMENT
3/16" = 1'-0"

Eric Fredstrom
DESIGN OVERSIGHT
11-21-11
SIGN OFF DATE

DESIGN DETAIL SHEET (ENGLISH) (REV. 06-01-09)

	BY	CHECKED
DESIGN	T. Pham	T. Walker
DETAILS	G. Boyko	T. Walker
QUANTITIES	T. Pham	E. Weeks

ORIGINAL SCALE IN INCHES FOR REDUCED PLANS 0 1 2 3

PREPARED FOR THE STATE OF CALIFORNIA DEPARTMENT OF TRANSPORTATION

JULIE PASSALACQUA
PROJECT ENGINEER

CU 03
EA 1E4901

BRIDGE NO. 12-0135
POST MILES 11.08

DEAD HORSE SLOUGH BRIDGE (WIDEN)
SLAB REINFORCEMENT

DISREGARD PRINTS BEARING EARLIER REVISION DATES

REVISION DATES (PRELIMINARY STAGE ONLY): 06/28/10 07/28/10 07/28/10 09/28/10 09/28/10 10/28/10 11/14/11

SHEET 8 OF 17

DIST	COUNTY	ROUTE	POST MILES TOTAL PROJECT	SHEET NO.	TOTAL SHEETS
03	But	32	10.3/11.3	136	144

Po-Kang Chen 11/14/11
REGISTERED ENGINEER – STRUCTURAL

12/22/11
PLANS APPROVAL DATE

The State of California or its officers or agents shall not be responsible for the accuracy or completeness of electronic copies of this plan sheet.

REGISTERED PROFESSIONAL ENGINEER PO-KANG CHEN No. S3112 Exp. 9/30/13 STRUCTURAL STATE OF CALIFORNIA

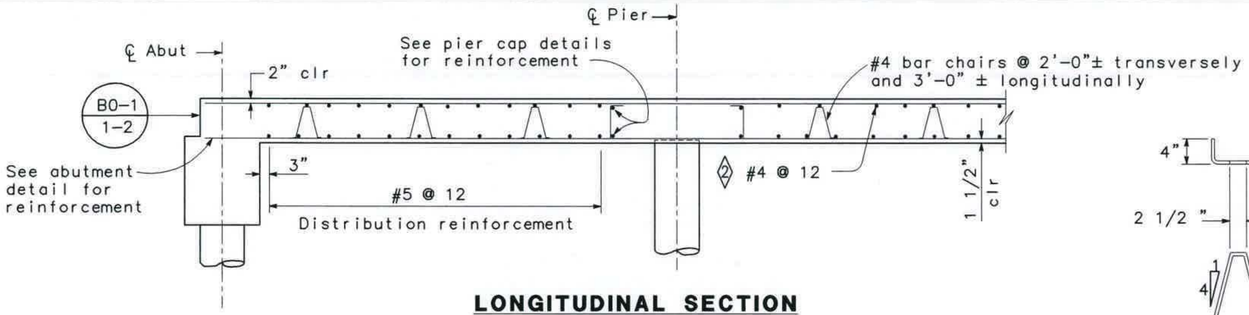

LONGITUDINAL SECTION
NO SCALE

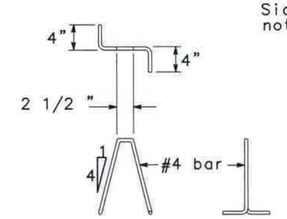

BAR CHAIR DETAIL
NO SCALE

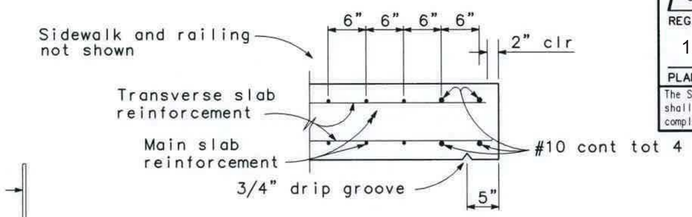

EDGE OF SLAB DETAILS
NO SCALE

BAR SPLICE LENGTH								
Bar size	#4	#5	#6	#7	#8	#9	#10	#11
All bars, except top bars in spans over 23'	23"	28"	34"	39"	45"	68"	76"	85"
Top bars in spans over 23'	23"	28"	34"	53"	60"	77"	97"	120"

Splices in top main bars to be located near center of span.
Splices in bottom main bars to be located near pier.
Spacing of all transverse bars is measured along C roadway.
Skew 0° to 20° : Place all transverse bars parallel to bent.
Skew over 20° : Place transverse slab bars perpendicular to ℄ bridge. See details at right and below.

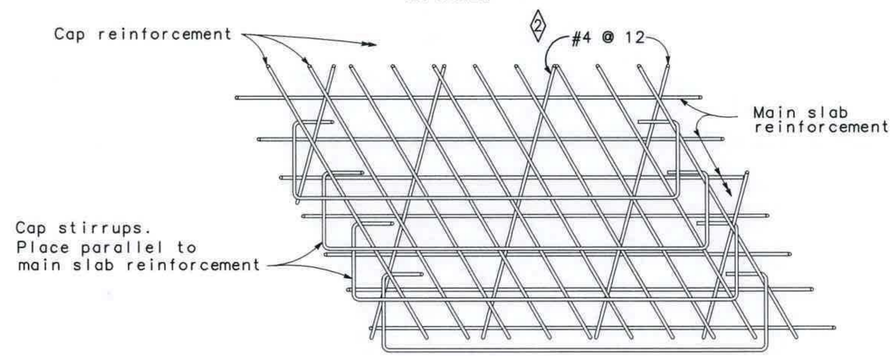

Note: View for main span over 23'.
Bar placement similar for spans under 23'

TOP SLAB REINFORCEMENT AT PIER
NO SCALE

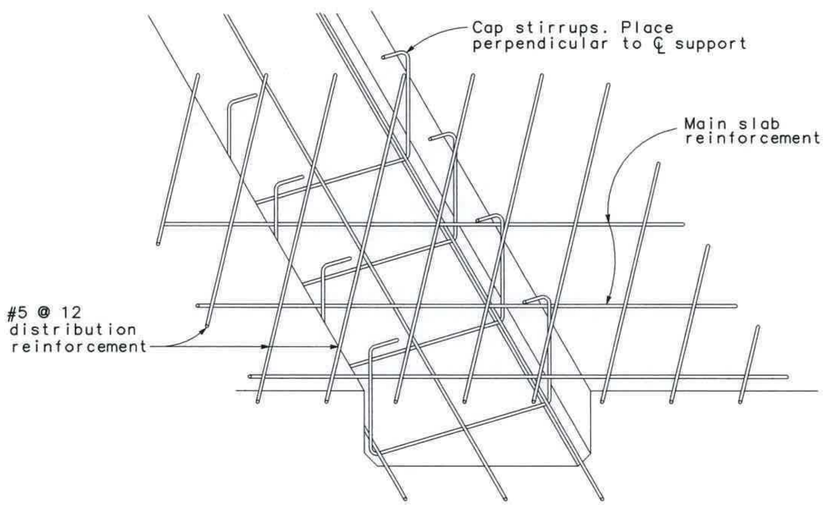

DROPPED CAP

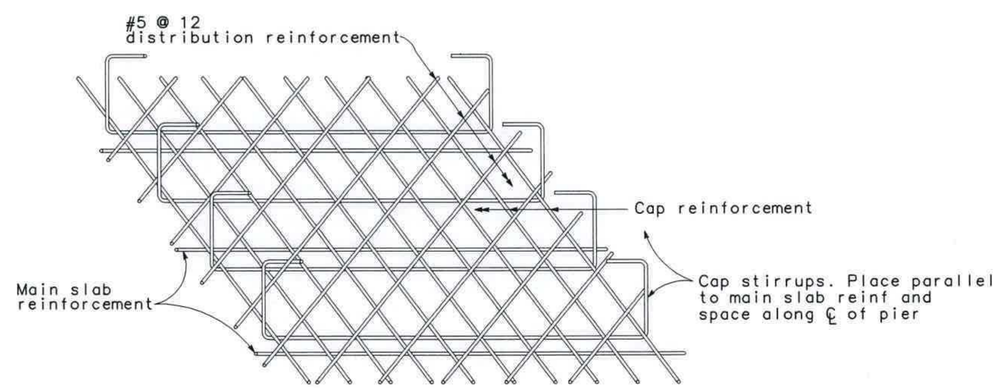

FLUSH CAP

BOTTOM SLAB REINFORCEMENT AT PIER
NO SCALE

STANDARD DRAWING

RELEASE DATE 8/26/97	DESIGN	BY L. Y. LEE	CHECKED T. FARNAN	RELEASED BY
	DETAILS	BY R. YEE	CHECKED T. FARNAN	
FILE NO. xs1-220	SUBMITTED	BY R. S. WATANABE	DRAWING DATE 8/88	OFFICE CHIEF

DS OSD 2147A (METRIC) (REV. 2/25/97)

1 Converted to English Units
2 Modified Top Slab Reinforcement

STATE OF CALIFORNIA
DEPARTMENT OF TRANSPORTATION

DIVISION OF ENGINEERING SERVICES

BRIDGE NO. 12-0135
POST MILE 11.08

DEAD HORSE SLOUGH BRIDGE (WIDEN)
SLAB REINFORCEMENT DETAILS

ORIGINAL SCALE IN INCHES FOR REDUCED PLANS 0 1 2 3

CU 03
EA 1E4901

DISREGARD PRINTS BEARING EARLIER REVISION DATES

REVISION DATES (PRELIMINARY STAGE ONLY) 06/23/10 07/29/10 09/28/10 09/27/10 10/18/10 11/14/11

SHEET 9 OF 17

USERNAME =>$USER

$REQUEST

DATE PLOTTED =>

DIST	COUNTY	ROUTE	POST MILES TOTAL PROJECT	SHEET NO.	TOTAL SHEETS
03	But	32	10.3/11.3	137	144

Po-Kang Chen 11/14/11
REGISTERED ENGINEER - STRUCTURAL

12/22/11
PLANS APPROVAL DATE

REGISTERED PROFESSIONAL ENGINEER PO-KANG CHEN No. S3112 Exp. 9/30/13 STRUCTURAL STATE OF CALIFORNIA

The State of California or its officers or agents shall not be responsible for the accuracy or completeness of electronic copies of this plan sheet.

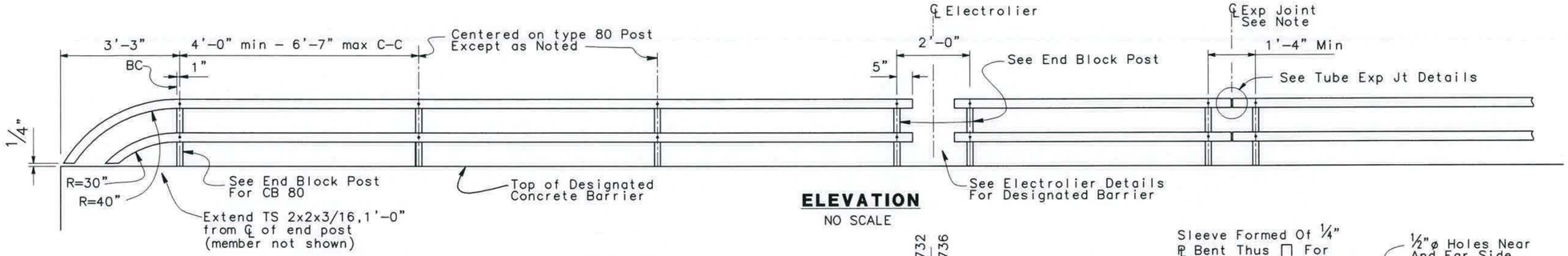

ELEVATION
NO SCALE

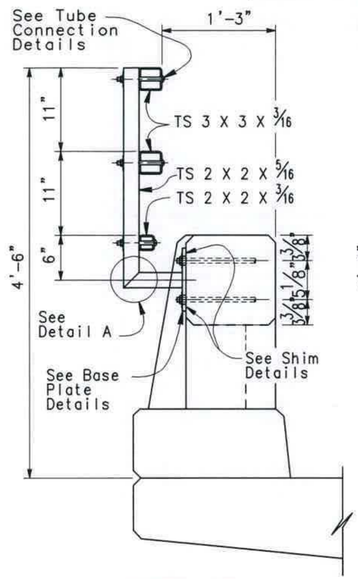

TYPE 80
END BLOCK POST
SCALE 1:10

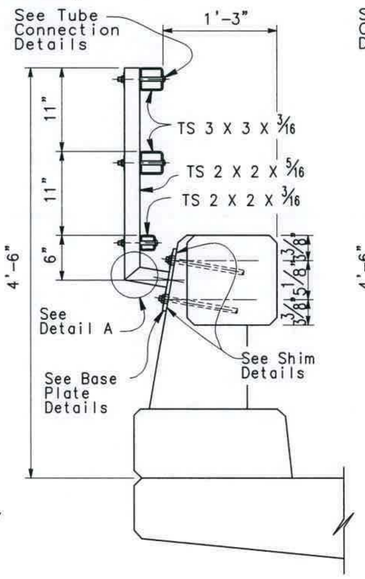

TYPE 80
SCALE 1:10

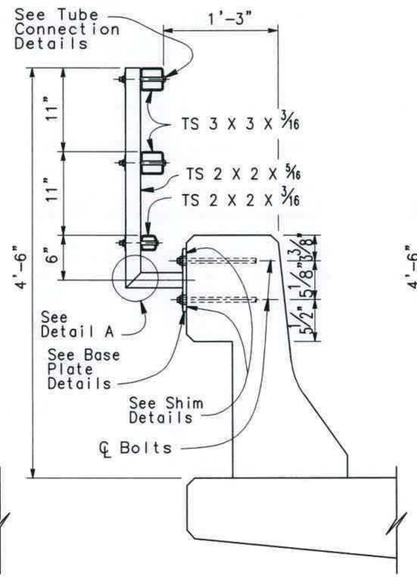

TYPE 25
SCALE 1:10

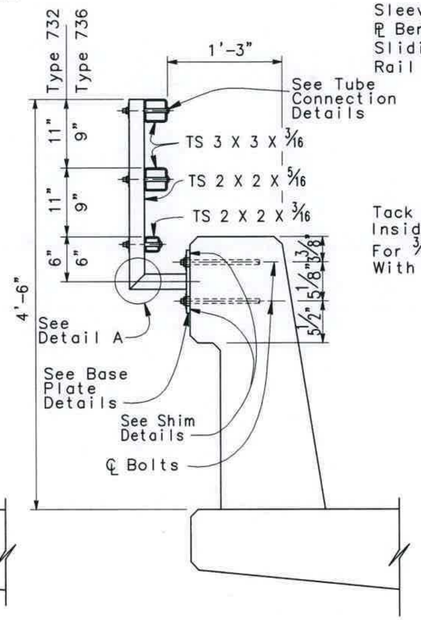

TYPE 732 OR 736
NO SCALE

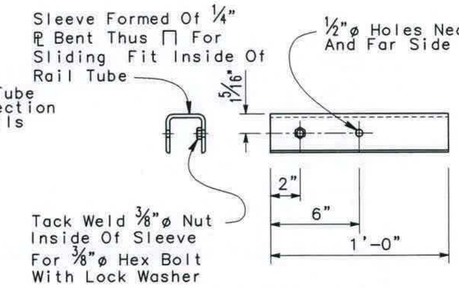

SLEEVE DETAIL
SCALE 1:5

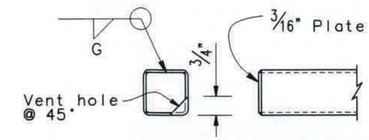

RAIL CAP DETAIL
SCALE 1:5

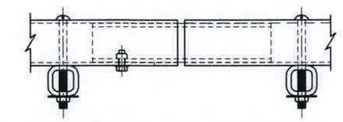

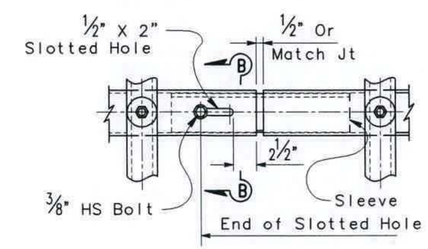

TUBE EXPANSION JOINT DETAILS
SCALE 1:5

VIEW B-B

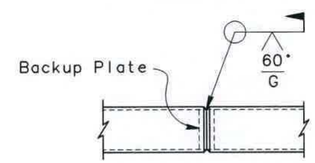

WELDED SPLICE DETAIL
SCALE 1:5

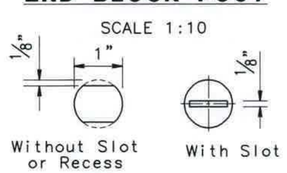

VIEW C-C
SCALE 1:1

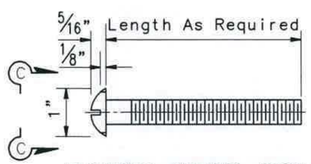

ROUND HEAD BOLT DETAIL
SCALE 1:1

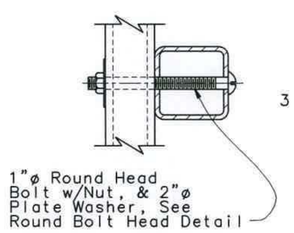

TUBE CONNECTION DETAIL
SCALE 1:2.5

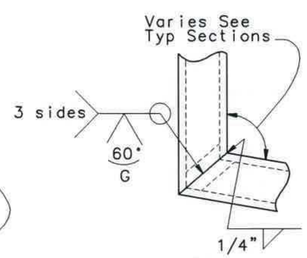

DETAIL A
SCALE 1:2.5

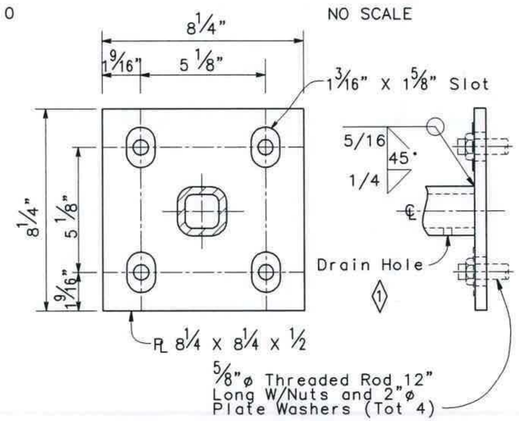

BASE PLATE DETAIL

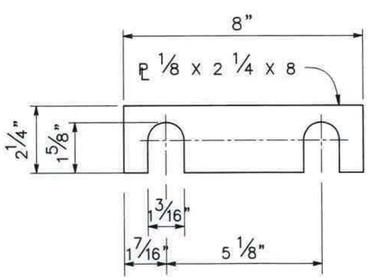

SHIM DETAILS
NO SCALE

NOTES:

1. Galvanize rail assembly after fabrication.
2. Post shall be normal to railing.
3. Rail tubes shall be shop bent or fabricated to fit horizontal curve when radius is less than 12 inches.
4. Tube splices shall be located in the tubes spanning deck or wall joints. Increase joint width in tubes to match expansion joint width and increase sleeve length correspondingly.
5. Top rail tube shall be continuous over not less than two posts except a short post spacing is permitted near deck or wall joints, electroliers, or other rail discontinuities as noted.
6. For details and reinforcement not shown see Standard Plan.
7. See project plans for limits of tubular hand railing.

STANDARD DRAWING

FILE NO. xs16-500e

APPROVED BY T SATTER — RESPONSIBLE TECHNICAL SPECIALIST
APPROVAL DATE 4-15-08

RELEASED BY ROBERTO LACALLE — RESPONSIBLE OFFICE CHIEF
RELEASE DATE 4-15-08

1 Added Drain Hole

STATE OF CALIFORNIA
DEPARTMENT OF TRANSPORTATION

DIVISION OF ENGINEERING SERVICES

BRIDGE NO. 12-0135
POST MILE 11.08

DEAD HORSE SLOUGH BRIDGE (WIDEN)
TUBULAR BICYCLE RAILING

DS OSD 2147A (ENGLISH STANDARD DRAWING "XS" BORDER REV. 01/11/08)

ORIGINAL SCALE IN INCHES FOR REDUCED PLANS 0 1 2 3

CU 03
EA 1E4901

DISREGARD PRINTS BEARING EARLIER REVISION DATES

REVISION DATES (PRELIMINARY STAGE ONLY) 07/28/10 09/14/10 09/27/10 10/18/10 11/14/11

SHEET 10 OF 17

USERNAME =>$USER

$REQUEST

DATE PLOTTED =>

DIST	COUNTY	ROUTE	POST MILES TOTAL PROJECT	SHEET NO.	TOTAL SHEETS
03	But	32	10.3/11.3	138	144

Po-Kang Chen 11/14/11
REGISTERED ENGINEER – STRUCTURAL

12/22/11
PLANS APPROVAL DATE

REGISTERED PROFESSIONAL ENGINEER PO-KANG CHEN No. S3112 Exp. 9/30/13 STRUCTURAL STATE OF CALIFORNIA

The State of California or its officers or agents shall not be responsible for the accuracy or completeness of electronic copies of this plan sheet.

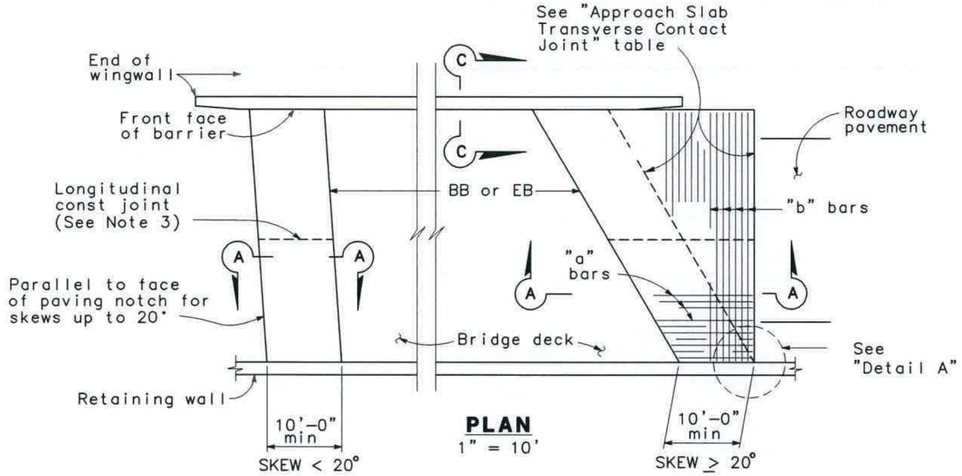

PLAN
1" = 10'

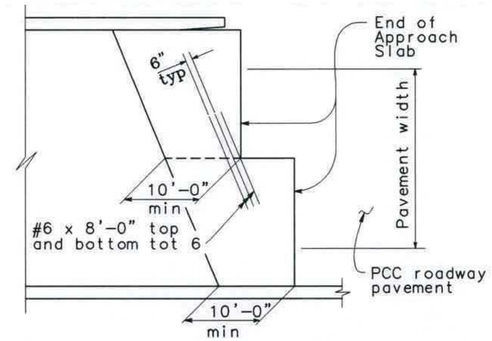

STRUCTURE APPROACH - END STAGGER DETAIL
No Scale

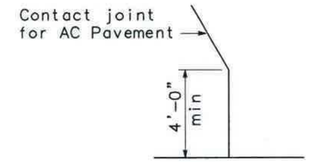

DETAIL A
No Scale

APPROACH SLAB TRANSVERSE CONTACT JOINT		
STRUCTURE SKEW	AC APPROACH PAVEMENT	PCC APPROACH PAVEMENT
< 20°	Parallel to face of paving notch	Parallel to face of paving notch
20° – 45°	Parallel to face of P N use (Detail A)	Stagger lines 24' to 36' apart
> 45°	Parallel to face of P N use (Detail A)	Stagger at each lane line

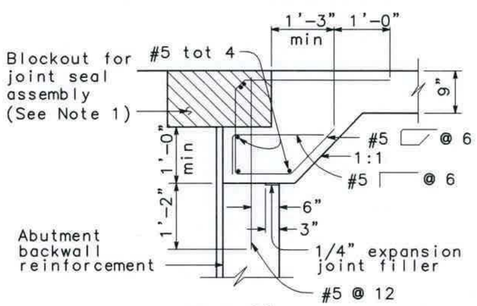

MR > 2"

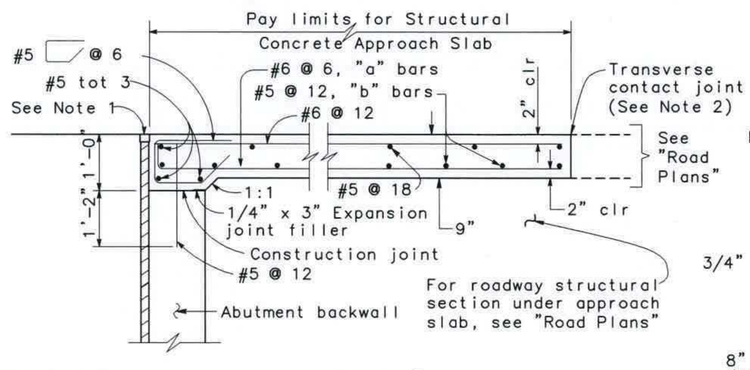

MR ≤ 2"

SEAT TYPE ABUTMENT
SECTION A-A
3/4" = 1'-0"

Note: Seat Type Abutment shown, for Diaphragm Type Abutment, see "Abutment Tie Details".

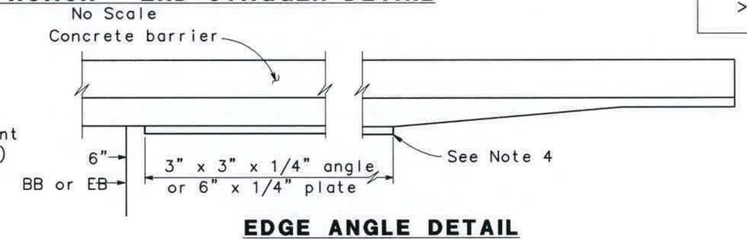

EDGE ANGLE DETAIL
1/2" = 1'-0"

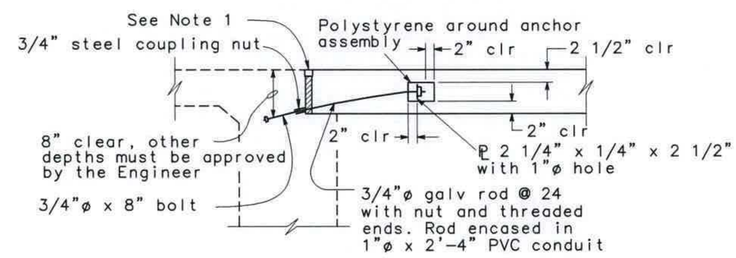

9" PAVING NOTCH

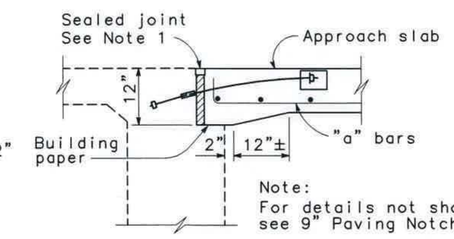

Note:
For details not shown, see 9" Paving Notch.

12" PAVING NOTCH ⟨1⟩

DIAPHRAGM TYPE ABUTMENT
ABUTMENT TIE DETAILS
3/4" = 1'-0"

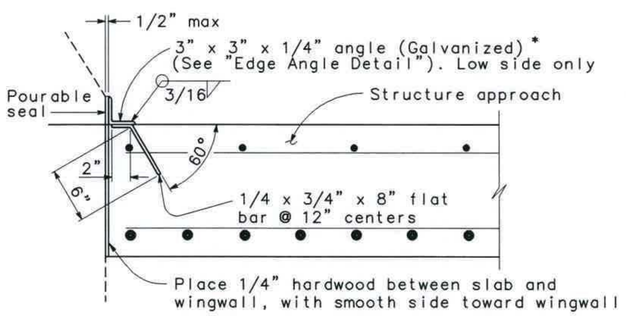

* (TO BE USED WITH TYPE 25 OR TYPE 27 CONCRETE BARRIER)

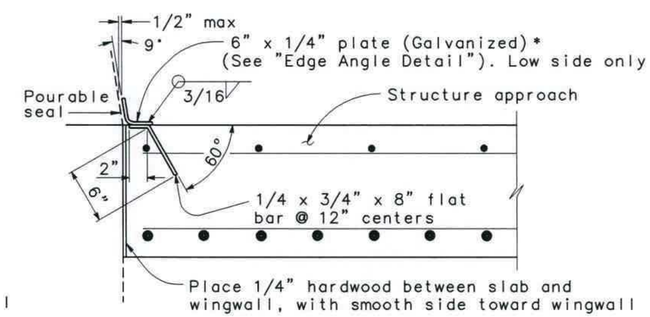

* (TO BE USED WITH TYPE 732 OR TYPE 736 CONCRETE BARRIER)

DETAIL B
1 1/2" = 1'-0"

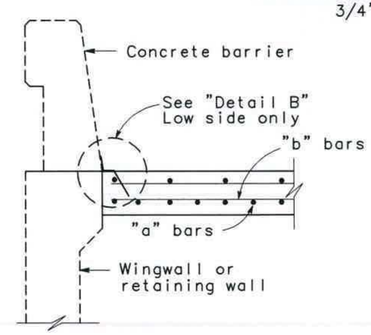

SECTION C-C ⟨2⟩
3/4" = 1'-0"

NOTES:

1. For details not noted or shown, see Structure Plans. Adjust bar reinforcement to clear a sawcut for sealed joint, when required.
2. For transverse contact joint with new PCC paving, refer to Standard Plan P10.
3. Longitudinal construction joints, when permitted by the Engineer, shall be located on lane lines.
4. End angle or plate at beginning of barrier transition, end of wing wall or end of structure approach as applicable.
5. At the contractor's option, approach slab transverse reinforcement may be placed parallel to paving notch. Spacing of transverse reinforcement is measured along ℄ roadway.
6. For drainage details, see Structure Plans.

STANDARD DRAWING

RELEASE DATE 3/14/05	DESIGN	BY M. TRAFFALIS	CHECKED E. THORKILDSEN	RELEASED BY
FILE NO. xs3-150e	DETAILS	BY R. YEE	CHECKED E. THORKILDSEN	OFFICE CHIEF
	SUBMITTED	BY M. HA	DRAWING DATE 8/92	

DS OSD 2147A (ENGLISH) (REV. X/XX/XX)

⟨1⟩ Modified Detail
⟨2⟩ Modified Section C–C

STATE OF CALIFORNIA
DEPARTMENT OF TRANSPORTATION

DIVISION OF ENGINEERING SERVICES

CU 03
EA 1E4901

BRIDGE NO. 12-0135
POST MILE 11.08

DEAD HORSE SLOUGH BRIDGE (WIDEN)
STRUCTURE APPROACH TYPE EQ(10)

ORIGINAL SCALE IN INCHES FOR REDUCED PLANS 0 1 2 3

DISREGARD PRINTS BEARING EARLIER REVISION DATES
REVISION DATES (PRELIMINARY STAGE ONLY) 06/28/10 07/28/10 09/18/10 10/18/10 11/14/11

SHEET 11 OF 17

USERNAME =>$USER
$REQUEST
DATE PLOTTED => $DATE
TIME PLOTTED => $TIME

DIST	COUNTY	ROUTE	POST MILES TOTAL PROJECT	SHEET NO.	TOTAL SHEETS
03	But	32	10.3/11.3	139	144

Po-Kang Chen 11/14/11
REGISTERED ENGINEER - STRUCTURAL
12/22/11
PLANS APPROVAL DATE
The State of California or its officers or agents shall not be responsible for the accuracy or completeness of electronic copies of this plan sheet.
REGISTERED PROFESSIONAL ENGINEER PO-KANG CHEN No. S3112 Exp. 9/30/13 STRUCTURAL STATE OF CALIFORNIA

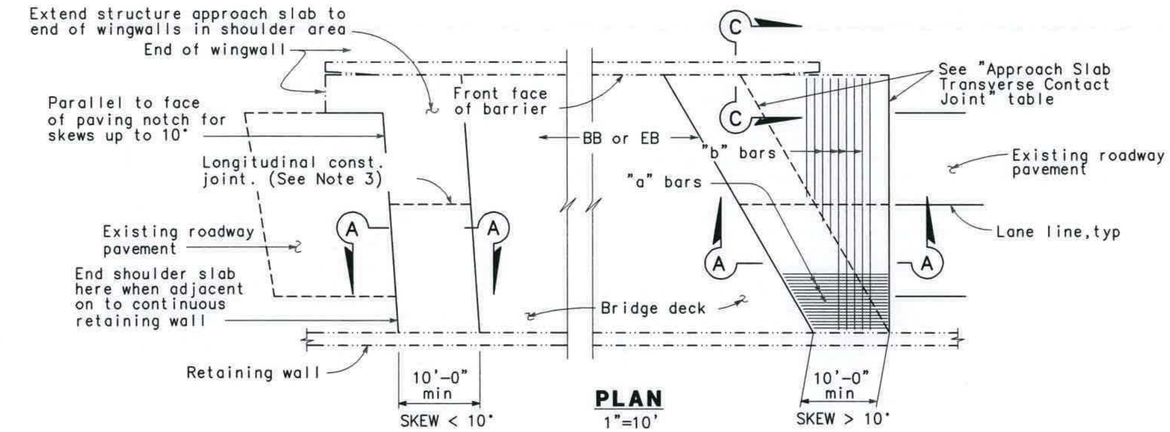

PLAN
1"=10'

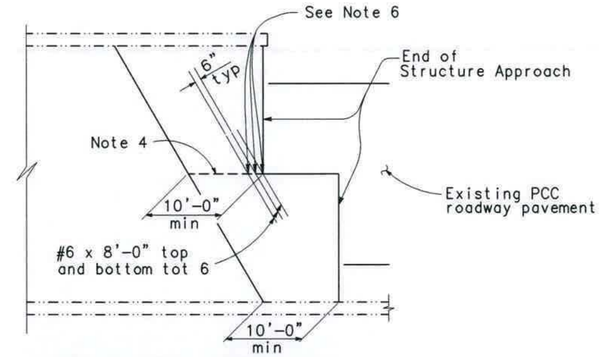

STRUCTURE APPROACH - END STAGGER DETAIL
No Scale

APPROACH SLAB TRANSVERSE CONTACT JOINT		
APPROACH SKEW	WITH AC ROADWAY PAVEMENT	WITH PCC ROADWAY PAVEMENT
< 10°	Parallel to face of paving notch	Parallel to face of paving notch
10° - 45°	Parallel to face of paving notch	Stagger lines 24' to 36' apart
> 45°	Parallel to face of paving notch	Stagger at each lane line

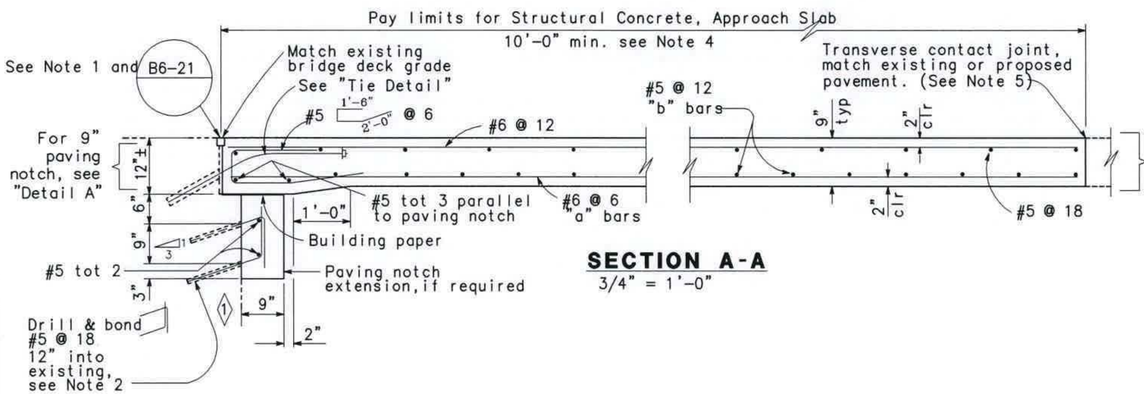

SECTION A-A
3/4" = 1'-0"

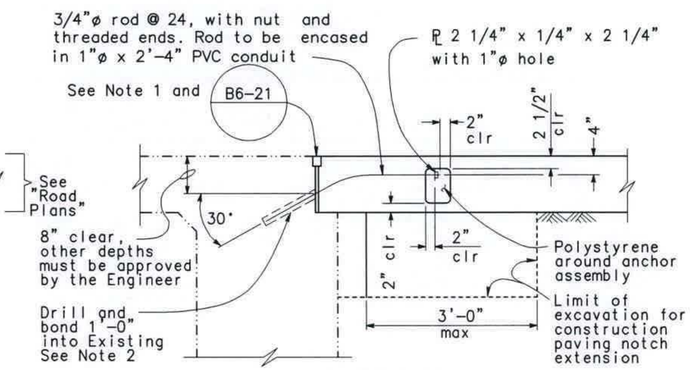

TIE DETAIL
3/4" = 1'-0"

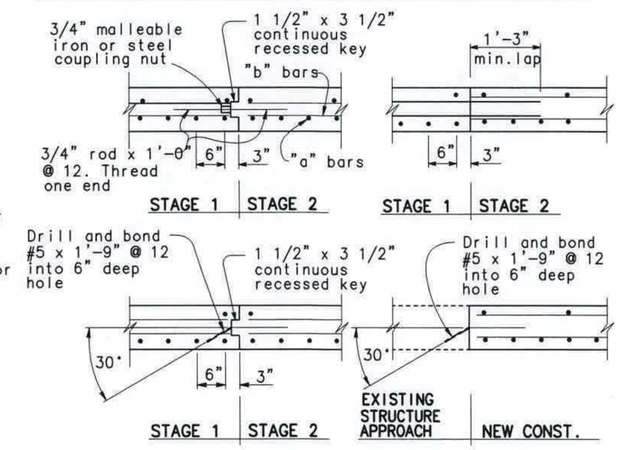

LONGITUDINAL CONSTRUCTION JOINT ALTERNATIVES
3/4" = 1'-0"

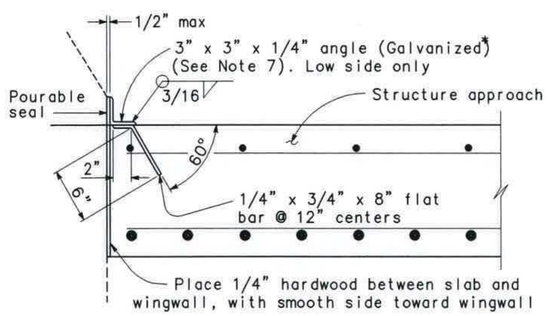

* **(TO BE USED WITH TYPE 25 OR TYPE 27 CONCRETE BARRIER)**

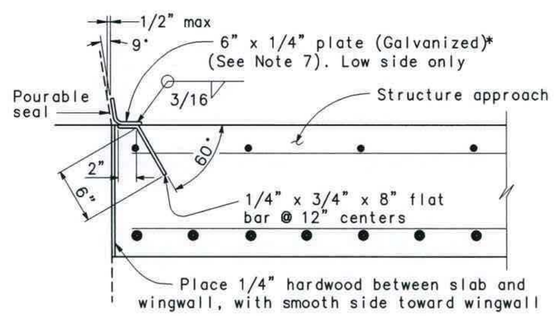

* **(TO BE USED WITH TYPE 732 OR TYPE 736 CONCRETE BARRIER)**

DETAIL B
1 1/2" = 1'-0"

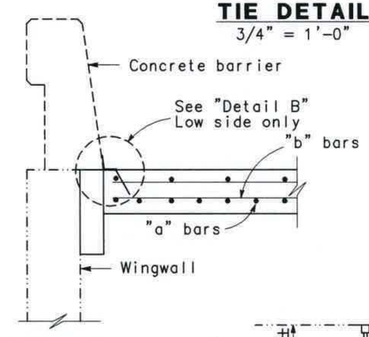

SECTION C-C
3/4" = 1'-0"

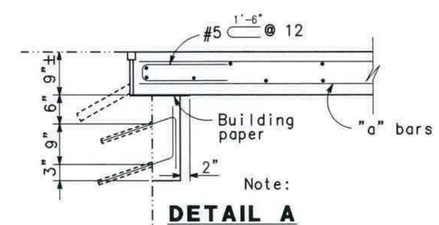

Note:

DETAIL A
3/4" = 1'-0"

Note: For details not shown, see "Section A-A".

NOTES:

1. For details not noted or shown, see Structure Plans. Adjust bar reinforcement to clear a sawcut for sealed joint, when required.
2. Space to avoid existing prestress anchorages and main reinforcement.
3. Longitudinal construction joints, when permitted by the Engineer, shall be located on lane lines.
4. Transverse contact joint shall be a minimum of 5'-0" from an existing or constructed weakened plane joint.
5. For transverse contact joint with new PCC paving, refer to Standard Plan P10.
6. Couplers are required for stage construction.
7. End angle or plate at beginning of barrier transition, end of wingwall or end of structure approach as applicable.

NOTE:

THE CONTRACTOR SHALL VERIFY ALL CONTROLLING FIELD DIMENSIONS BEFORE ORDERING OR FABRICATING ANY MATERIAL.

STANDARD DRAWING

RELEASE DATE 3/14/05	DESIGN	BY M. TRAFFALIS	CHECKED E. THORKILDSEN	RELEASED BY
FILE NO. xs3-170	DETAILS	BY R. YEE	CHECKED E. THORKILDSEN	
	SUBMITTED	BY M. HA	DRAWING DATE 8/92	OFFICE CHIEF

1 Modified Paving Notch Extension
2 Modified Section C-C

STATE OF CALIFORNIA
DEPARTMENT OF TRANSPORTATION

DIVISION OF ENGINEERING SERVICES

BRIDGE NO. 12-0135
POST MILE 11.08

DEAD HORSE SLOUGH BRIDGE (WIDEN)
STRUCTURE APPROACH TYPE R(10D)

DS OSD 2147A (ENGLISH) (REV. X/XX/XX)

ORIGINAL SCALE IN INCHES FOR REDUCED PLANS 0 1 2 3

CU 03
EA 1E4901

DISREGARD PRINTS BEARING EARLIER REVISION DATES

REVISION DATES (PRELIMINARY STAGE ONLY) 06/28/10 07/28/10 08/28/10 09/28/10 10/28/10 11/14/11

SHEET 12 OF 17

USERNAME => $USER

$REQUEST

TIME PLOTTED => $TIME

DATE PLOTTED => $DATE

DIST	COUNTY	ROUTE	POST MILES TOTAL PROJECT	SHEET No	TOTAL SHEETS
03	But	32	10.3/11.3	140	144

REGISTERED ENGINEERING GEOLOGIST — DATE 11/14/11

PLANS APPROVAL DATE 12/22/11

PROFESSIONAL GEOLOGIST William E. Nichols No. 2229 Exp. 1-31-12 CERTIFIED ENGINEERING GEOLOGIST STATE OF CALIFORNIA

The State of California or its officers or agents shall not be responsible for the accuracy or completeness of scanned copies of this plan sheet.

BLACKBURN CONSULTING
2491 BOATMAN AVENUE
WEST SACRAMENTO, CA 95691

MARK THOMAS & CO., INC.
7300 FOLSOM BLVD STE 203
SACRAMENTO, CA 95826

CITY OF CHICO
CAPITAL PROJECT SERVICES
411 MAIN STREET
CHICO, CA 95927

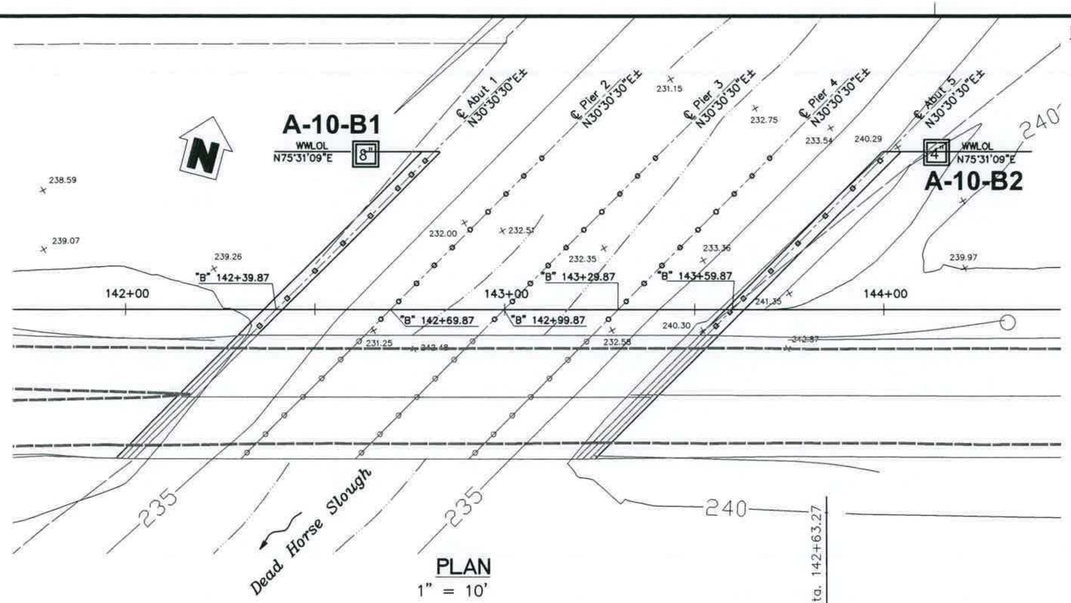

PLAN
1" = 10'

LEGEND:

- Indicates Driven Pile
- Indicates Existing Pile
- Indicates Existing Structure

NOTES:

1. Field classification of soils was in accordance with the Caltrans Soil & Rock Logging, Classification, and Presentation Manual (June 2007). See Log of Test Borings No. 2 and 3, "Soil Legend" and Log of Test Borings No. 4 "Rock Legend".
2. Standard Penetration tests were performed in accordance with ASTM D 1586-99 using a hammer operated with an automated drop system. Drill rods were 1 5/8-inch diameter "A"-rods; sampler was driven with brass liners.
3. "2.4 inch sampler": ID=2.4 inch, OD=2.9 inch. Driven in same manner as SPT ("1.4 inch") sampler.
4. If laboratory tests are not shown as being performed, the soil descriptions presented in the LOTB are based solely on the visual practices described in the before mentioned Manual.
5. The length of each sampled interval is shown graphically on the boring log.
6. Consistency of soils shown in ( ) where estimated.
7. Ground water surface (GWS) reflects the fluid level in the boring on the specified date. Ground water surface is subject to seasonal fluctuations and may occur at higher or lower elevations depending on the conditions at any particular time.
8. Electronic media for plan view provided by Mark Thomas & Company, Inc., 7-26-2010.
9. Boring elevations are approximate and based on "Foundation Plan", received 7-26-2010.
10. The "Log of Test Borings" drawing is included with plans in accordance with Section 2-1.03 of Caltrans "Standard Specifications".

BENCHMARK

P1434 (PID: KS1933) NGS cap on rod in monument well at east 8th & Linden.
Elev 210.91

TBM #34 Set mag nail in AC at northerly shoulder SR 32.
Elev 242.16

TBM #31 Set mag nail in AC at northerly shoulder SR 32.
Elev 246.28

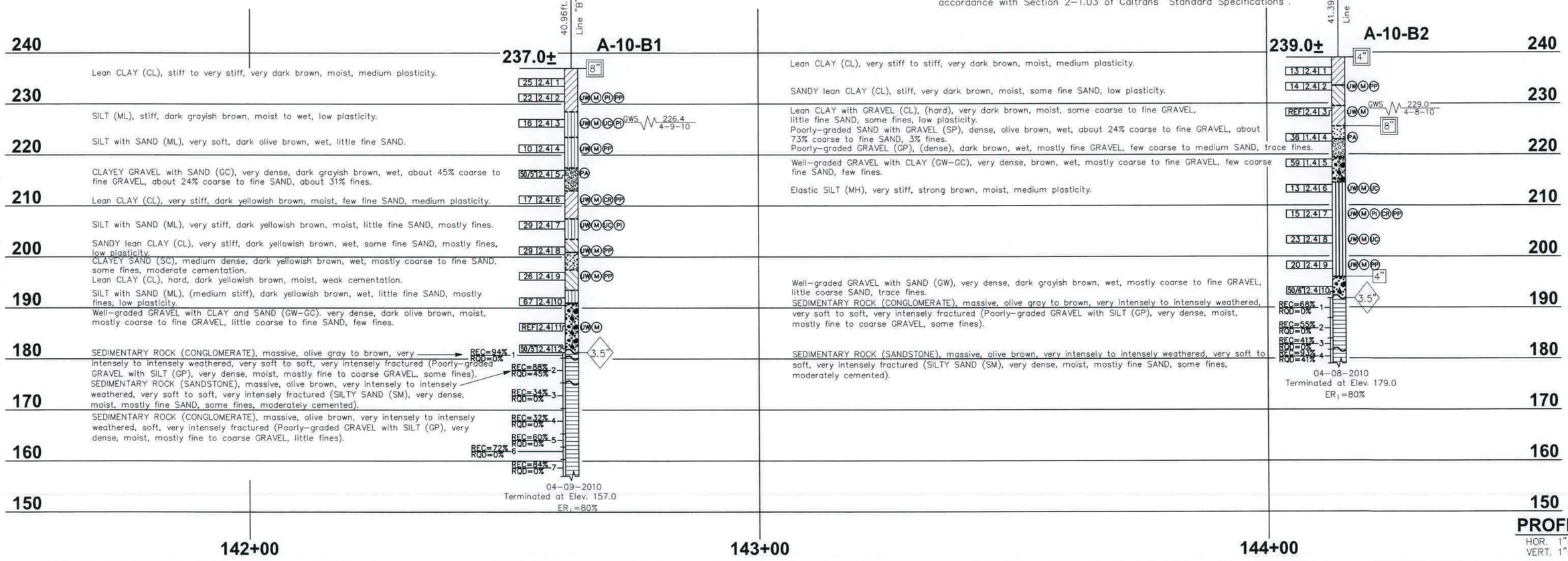

PROFILE

HOR. 1"=10'
VERT. 1"=10'

ENGINEERING SERVICES	GEOTECHNICAL SERVICES	PREPARED FOR THE STATE OF CALIFORNIA DEPARTMENT OF TRANSPORTATION	JULIE PASSALACQUA PROJECT ENGINEER	BRIDGE NO. 12-0135 POST MILES 11.08	DEAD HORSE SLOUGH BRIDGE (WIDEN)
FUNCTIONAL SUPERVISOR 11-21-11	DRAWN BY: M. ROBERTSON CHECKED BY: W. E. NICHOLS	FIELD INVESTIGATION BY: K. CHAPMAN BCI File No. 1202.1			LOG OF TEST BORINGS 1 OF 5

FOUNDATION PLAN SHEET (ENGLISH) (REV. 06-01-09)

ORIGINAL SCALE IN INCHES FOR REDUCED PLANS 0 1 2 3

CU 03
EA 1E4901

DISREGARD PRINTS BEARING EARLIER REVISION DATES — REVISION DATES (PRELIMINARY STAGE ONLY) 10/27/10 05/26/11 11/14/11

SHEET 13 OF 17

FILE => $REQUEST

12021 Dead Horse Slough Bridge (Widen) LOTB.dwg 11/14/2011

USERNAME => $USER DATE PLOTTED => $DATE TIME PLOTTED => $TIME

REFERENCE: CALTRANS SOIL & ROCK LOGGING, CLASSIFICATION, AND PRESENTATION MANUAL, (JUNE, 2007)

DIST	COUNTY	ROUTE	POST MILES TOTAL PROJECT	SHEET No	TOTAL SHEETS
03	But	32	10.3/11.3	141	144

REGISTERED ENGINEERING GEOLOGIST — DATE 11/14/11

PROFESSIONAL GEOLOGIST William E. Nichols No. 2229 Exp. 1-31-12 CERTIFIED ENGINEERING GEOLOGIST STATE OF CALIFORNIA

12/22/11
PLANS APPROVAL DATE

The State of California or its officers or agents shall not be responsible for the accuracy or completeness of scanned copies of this plan sheet.

BLACKBURN CONSULTING
2491 BOATMAN AVENUE
WEST SACRAMENTO, CA 95691

MARK THOMAS & CO., INC.
7300 FOLSOM BLVD STE 203
SACRAMENTO, CA 95826

CITY OF CHICO
CAPITAL PROJECT SERVICES
411 MAIN STREET
CHICO, CA 95927

CEMENTATION

Description	Criteria
Weak	Crumbles or breaks with handling or little finger pressure.
Moderate	Crumbles or breaks with considerable finger pressure.
Strong	Will not crumble or break with finger pressure.

CONSISTENCY OF COHESIVE SOILS

Description	Unconfined Compressive Strength (tsf)	Pocket Penetrometer Measurement (tsf)	Torvane Measurement (tsf)	Field Approximation
Very Soft	<0.25	<0.25	<0.12	Easily penetrated several inches by fist
Soft	0.25 to 0.50	0.25 to 0.50	0.12 to 0.25	Easily penetrated several inches by thumb
Medium Stiff	0.50 to 1.0	0.50 to 1.0	0.25 to 0.50	Penetrated several inches by thumb with moderate effort
Stiff	1 to 2	1 to 2	0.50 to 1.0	Readily indented by thumb but penetrated only with great effort
Very Stiff	2 to 4	2 to 4	1.0 to 2.0	Readily indented by thumbnail
Hard	> 4.0	> 4.0	> 2.0	Indented by thumbnail with difficulty

BOREHOLE IDENTIFICATION

Symbol	Hole Type	Description
Size	A	Auger Boring
Size	R P	Rotary drilled boring Rotary percussion boring (air)
Size	R	Rotary drilled diamond core
Size	HD HA	Hand driven (1-inch soil tube) Hand Auger
●	D	Dynamic Cone Penetration Boring
▲	CPT	Cone Penetration Test (ASTM D 5778)
⬚	O	Other

NOTE: Size in inches.

PLASTICITY OF FINE-GRAINED SOILS

Description	Criteria
Nonplastic	A 1/8-inch thread cannot be rolled at any water content.
Low	The thread can barely be rolled and the lump cannot be formed when drier than the plastic limit.
Medium	The thread is easy to roll and not much time is required to reach the plastic limit. The thread cannot be rerolled after reaching the plastic limit. The lump crumbles when drier than the plastic limit.
High	It takes considerable time rolling and kneading to reach the plastic limit. The thread can be rerolled several times after reaching the plastic limit. The lump can be formed without crumbling when drier than the plastic limit.

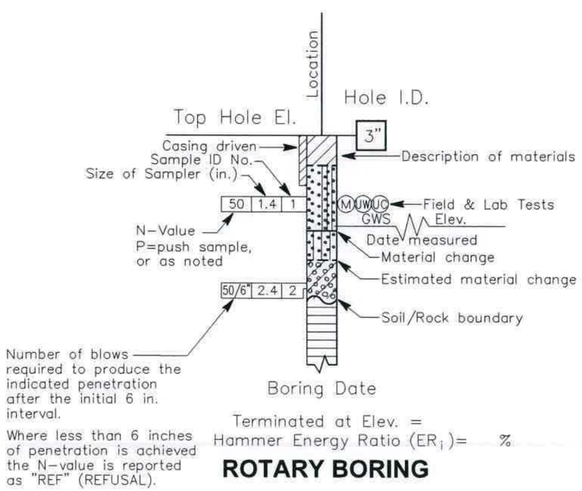

ROTARY BORING

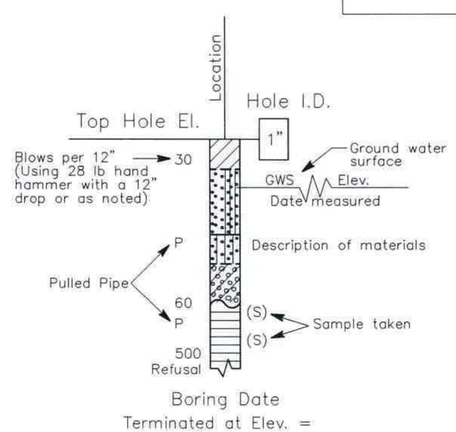

HAND BORING

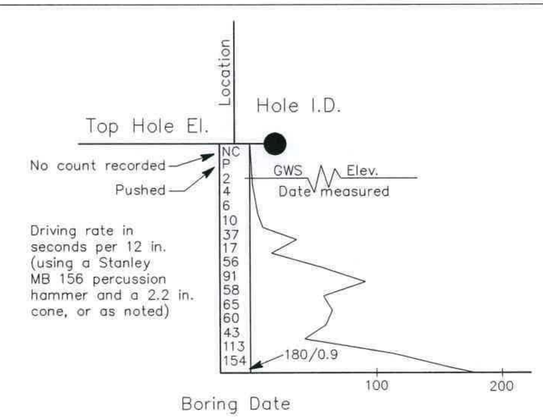

DYNAMIC CONE PENETRATION BORING

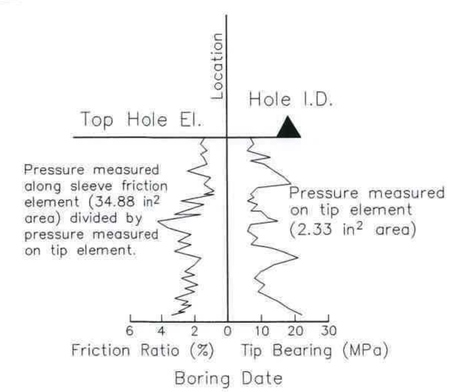

CONE PENETRATION TEST (CPT) SOUNDING

ENGINEERING SERVICES	GEOTECHNICAL SERVICES	PREPARED FOR THE STATE OF CALIFORNIA DEPARTMENT OF TRANSPORTATION	JULIE PASSALACQUA PROJECT ENGINEER	BRIDGE NO. 12-0135	SOIL LEGEND
FUNCTIONAL SUPERVISOR Eric Fredericksen 11-21-11	DRAWN BY: M. ROBERTSON CHECKED BY: W. E. NICHOLS	FIELD INVESTIGATION BY: K. CHAPMAN BCI File No. 1202.1		POST MILES 11.08	DEAD HORSE SLOUGH BRIDGE (WIDEN) LOG OF TEST BORINGS 2 OF 5
FOUNDATION PLAN SHEET (ENGLISH) (REV. 06-01-09)	ORIGINAL SCALE IN INCHES FOR REDUCED PLANS 0 1 2 3		CU 03 EA 1E4901	DISREGARD PRINTS BEARING EARLIER REVISION DATES	REVISION DATES (PRELIMINARY STAGE ONLY) 10/27/10 05/26/11 11/14/11 — SHEET 14 OF 17

FILE => $REQUEST

11/14/2011 1202.1 Dead Horse Slough Bridge (Widen) LOTB.dwg

DIST	COUNTY	ROUTE	POST MILES TOTAL PROJECT	SHEET No	TOTAL SHEETS
03	But	32	10.3/11.3	142	144

REGISTERED ENGINEERING GEOLOGIST 11/14/11 DATE

12/22/11
PLANS APPROVAL DATE

The State of California or its officers or agents shall not be responsible for the accuracy or completeness of scanned copies of this plan sheet.

PROFESSIONAL GEOLOGIST William E. Nichols No. 2229 Exp. 1-31-12 CERTIFIED ENGINEERING GEOLOGIST STATE OF CALIFORNIA

BLACKBURN CONSULTING
2491 BOATMAN AVENUE
WEST SACRAMENTO, CA 95691

MARK THOMAS & CO., INC.
7300 FOLSOM BLVD STE 203
SACRAMENTO, CA 95826

CITY OF CHICO
CAPITAL PROJECT SERVICES
411 MAIN STREET
CHICO, CA 95927

REFERENCE: CALTRANS SOIL & ROCK LOGGING, CLASSIFICATION, AND PRESENTATION MANUAL, (JUNE, 2007)

GROUP SYMBOLS AND NAMES

Graphic/Symbol	Group Names	Graphic/Symbol	Group Names
GW	Well-graded GRAVEL Well-graded GRAVEL with SAND	CL	Lean CLAY Lean CLAY with SAND Lean CLAY with GRAVEL SANDY lean CLAY SANDY lean CLAY with GRAVEL GRAVELLY lean CLAY GRAVELLY lean CLAY with SAND
GP	Poorly-graded GRAVEL Poorly-graded GRAVEL with SAND		
GW-GM	Well-graded GRAVEL with SILT Well-graded GRAVEL with SILT and SAND	CL-ML	SILTY CLAY SILTY CLAY with SAND SILTY CLAY with GRAVEL SANDY SILTY CLAY SANDY SILTY CLAY with GRAVEL GRAVELLY SILTY CLAY GRAVELLY SILTY CLAY with SAND
GW-GC	Well-graded GRAVEL with CLAY (or SILTY CLAY) Well-graded GRAVEL with CLAY and SAND (or SILTY CLAY and SAND)		
GP-GM	Poorly-graded GRAVEL with SILT Poorly-graded GRAVEL with SILT and SAND	ML	SILT SILT with SAND SILT with GRAVEL SANDY SILT SANDY SILT with GRAVEL GRAVELLY SILT GRAVELLY SILT with SAND
GP-GC	Poorly-graded GRAVEL with CLAY (or SILTY CLAY) Poorly-graded GRAVEL with CLAY and SAND (or SILTY CLAY and SAND)		
GM	SILTY GRAVEL SILTY GRAVEL with SAND	OL	ORGANIC lean Clay ORGANIC lean Clay with SAND ORGANIC lean Clay with GRAVEL SANDY ORGANIC lean CLAY SANDY ORGANIC lean CLAY with GRAVEL GRAVELLY ORGANIC lean CLAY GRAVELLY ORGANIC lean CLAY with SAND
GC	CLAYEY GRAVEL CLAYEY GRAVEL with SAND		
GC-GM	SILTY, CLAYEY GRAVEL SILTY, CLAYEY GRAVEL with SAND	OL	ORGANIC SILT ORGANIC SILT with SAND ORGANIC SILT with GRAVEL SANDY ORGANIC SILT SANDY ORGANIC SILT with GRAVEL GRAVELLY ORGANIC SILT GRAVELLY ORGANIC SILT with SAND
SW	Well-graded SAND Well-graded SAND with GRAVEL		
SP	Poorly-graded SAND Poorly-graded SAND with GRAVEL	CH	Fat CLAY Fat CLAY with SAND Fat CLAY with GRAVEL SANDY fat CLAY SANDY fat CLAY with GRAVEL GRAVELLY fat CLAY GRAVELLY fat CLAY with SAND
SW-SM	Well-graded SAND with SILT Well-graded SAND with SILT and GRAVEL		
SW-SC	Well-graded SAND with CLAY (or SILTY CLAY) Well-graded SAND with CLAY and GRAVEL (or SILTY CLAY and GRAVEL)	MH	Elastic SILT Elastic SILT with SAND Elastic SILT with GRAVEL SANDY elastic SILT SANDY elastic SILT with GRAVEL GRAVELLY elastic SILT GRAVELLY elastic SILT with SAND
SP-SM	Poorly-graded SAND with SILT Poorly-graded SAND with SILT and GRAVEL		
SP-SC	Poorly-graded SAND with CLAY (or SILTY CLAY) Poorly-graded SAND with CLAY and GRAVEL (or SILTY CLAY and GRAVEL)	OH	ORGANIC fat CLAY ORGANIC fat CLAY with SAND ORGANIC fat CLAY with GRAVEL SANDY ORGANIC fat CLAY SANDY ORGANIC fat CLAY with GRAVEL GRAVELLY ORGANIC fat CLAY GRAVELLY ORGANIC fat CLAY with SAND
SM	SILTY SAND SILTY SAND with GRAVEL		
SC	CLAYEY SAND CLAYEY SAND with GRAVEL	OH	ORGANIC elastic SILT ORGANIC elastic SILT with SAND ORGANIC elastic SILT with GRAVEL SANDY ORGANIC elastic SILT SANDY ORGANIC elastic SILT with GRAVEL GRAVELLY ORGANIC elastic SILT GRAVELLY ORGANIC elastic SILT with SAND
SC-SM	SILTY, CLAYEY SAND SILTY, CLAYEY SAND with GRAVEL		
PT	PEAT	OH/OL	ORGANIC SOIL ORGANIC SOIL with SAND ORGANIC SOIL with GRAVEL SANDY ORGANIC SOIL SANDY ORGANIC SOIL with GRAVEL GRAVELLY ORGANIC SOIL GRAVELLY ORGANIC SOIL with SAND
	COBBLES COBBLES and BOULDERS BOULDERS		

FIELD AND LABORATORY TESTING

- (C) Consolidation (ASTM D 2435)
- (CL) Collapse Potential (ASTM D 5333)
- (CP) Compaction Curve (CTM 216)
- (CR) Corrosivity Testing (CTM 643, CTM 422, CTM 417)
- (CU) Consolidated Undrained Triaxial (ASTM D 4767)
- (DS) Direct Shear (ASTM D 3080)
- (EI) Expansion Index (ASTM D 4829)
- (M) Moisture Content (ASTM D 2216)
- (OC) Organic Content-% (ASTM D 2974)
- (P) Permeability (CTM 220)
- (PA) Particle Size Analysis (ASTM D 422)
- (PI) Plasticity Index (AASHTO T 90) Liquid Limit (AASHTO T 89)
- (PL) Point Load Index (ASTM D 5731)
- (PM) Pressure Meter
- (PP) Pocket Penetrometer
- (R) R-Value (CTM 301)
- (SE) Sand Equivalent (CTM 217)
- (SG) Specific Gravity (AASHTO T 100)
- (SL) Shrinkage Limit (ASTM D 427)
- (SW) Swell Potential (ASTM D 4546)
- (TV) Pocket Torvane
- (UC) Unconfined Compression-Soil (ASTM D 2166) Unconfined Compression-Rock (ASTM D 2938)
- (UU) Unconsolidated Undrained Triaxial (ASTM D 2850)
- (UW) Unit Weight (ASTM D 2937)
- (VS) Vane Shear (AASHTO T 223)

APPARENT DENSITY OF COHESIONLESS SOILS

Description	SPT N_{60}-Value (Blows / 12 inches)
Very Loose	0 - 4
Loose	5 - 10
Medium Dense	11 - 30
Dense	31 - 50
Very Dense	> 50

MOISTURE

Description	Criteria
Dry	Absence of moisture, dusty, dry to the touch
Moist	Damp but no visible water
Wet	Visible free water, usually soil is below water table

PERCENT OR PROPORTION OF SOILS

Description	Criteria
Trace	Particles are present but estimated to be less than 5%
Few	5 to 10%
Little	15 to 25%
Some	30 to 45%
Mostly	50 to 100%

PARTICLE SIZE

Description		Size
Boulder		> 12"
Cobble		3" to 12"
Gravel	Coarse	3/4" to 3"
	Fine	No. 4 to 3/4"
Sand	Coarse	No. 10 to No. 4
	Medium	No. 40 to No. 10
	Fine	No. 200 to No. 40

ENGINEERING SERVICES

FUNCTIONAL SUPERVISOR: Cui Fudsilva 11-21-11

DRAWN BY: M. ROBERTSON

CHECKED BY: W. E. NICHOLS

GEOTECHNICAL SERVICES

FIELD INVESTIGATION BY: K. CHAPMAN

BCI File No. 1202.1

PREPARED FOR THE STATE OF CALIFORNIA DEPARTMENT OF TRANSPORTATION

JULIE PASSALACQUA
PROJECT ENGINEER

BRIDGE NO. 12-0135
POST MILES 11.08

SOIL LEGEND

DEAD HORSE SLOUGH BRIDGE (WIDEN)

LOG OF TEST BORINGS 3 OF 5

FOUNDATION PLAN SHEET (ENGLISH) (REV. 06-01-09)

ORIGINAL SCALE IN INCHES FOR REDUCED PLANS 0 1 2 3

CU 03
EA 1E4901

DISREGARD PRINTS BEARING EARLIER REVISION DATES

REVISION DATES (PRELIMINARY STAGE ONLY) 10/27/10 05/26/11 11/14/11

SHEET 15 OF 17

FILE => $REQUEST

11/14/2011 12202.1 Dead Horse Slough Bridge (Widen) LOTB.dwg

PLOT DATE => $DATE TIME PLOTTED => $TIME

REFERENCE: CALTRANS SOIL & ROCK LOGGING, CLASSIFICATION, AND PRESENTATION MANUAL, (JUNE, 2007)

DIST	COUNTY	ROUTE	POST MILES TOTAL PROJECT	SHEET No	TOTAL SHEETS
03	But	32	10.3/11.3	143	144

REGISTERED ENGINEERING GEOLOGIST — DATE 11/14/11

12/22/11
PLANS APPROVAL DATE

The State of California or its officers or agents shall not be responsible for the accuracy or completeness of scanned copies of this plan sheet.

PROFESSIONAL GEOLOGIST — William E. Nichols — No. 2229 — Exp. 1-31-12 — CERTIFIED ENGINEERING GEOLOGIST — STATE OF CALIFORNIA

BLACKBURN CONSULTING
2491 BOATMAN AVENUE
WEST SACRAMENTO, CA 95691

MARK THOMAS & CO., INC.
7300 FOLSOM BLVD STE 203
SACRAMENTO, CA 95826

CITY OF CHICO
CAPITAL PROJECT SERVICES
411 MAIN STREET
CHICO, CA 95927

PERCENT CORE RECOVERY (REC) & ROCK QUALITY DESIGNATION (RQD)

$$REC = \frac{\sum \text{Length of the recovered core pieces (inches)}}{\text{Total length of core run (inches)}} \times 100\%$$

$$RQD = \frac{\sum \text{Length of the intact core pieces} \geq 4''}{\text{Total length of core run (inches)}} \times 100\%$$

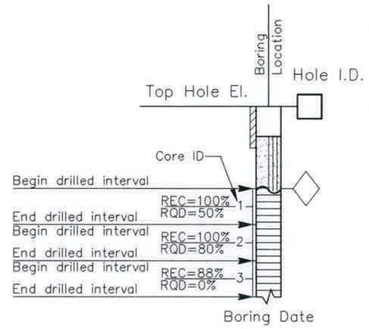

RELATIVE STRENGTH OF INTACT ROCK

Term	Uniaxial Compressive Strength (PSI)
Extremely Strong	> 30,000
Very Strong	14,500 – 30,000
Strong	7,000 – 14,500
Medium Strong	3,500 – 7,000
Weak	700 – 3,500
Very Weak	150 – 700
Extremely Weak	< 150

BEDDING SPACING

Description	Thickness / Spacing
Massive	Greater than 10 ft
Very thickly bedded	3 to 10 ft
Thickly bedded	1 to 3 ft
Moderately bedded	3-5/8" to 1 ft
Thinly bedded	1-1/4" to 3-5/8"
Very thinly bedded	3/8" to 1-1/4"
Laminated	Less than 3/8"

LEGEND OF ROCK MATERIALS

IGNEOUS ROCK

SEDIMENTARY ROCK

METAMORPHIC ROCK

ROCK HARDNESS

Description	Criteria
Extremely Hard	Specimen cannot be scratched with a pocket knife or sharp pick; can only be chipped with repeated heavy hammer blows.
Very Hard	Specimen cannot be scratched with a pocket knife or sharp pick. Breaks with repeated heavy hammer blows.
Hard	Specimen can be scratched with a pocket knife or sharp pick with difficulty (heavy pressure). Heavy hammer blows required to break specimen.
Moderately Hard	Specimen can be scratched with a pocket knife or sharp pick with light or moderate pressure. Core breaks with moderate hammer pressure.
Moderately Soft	Specimen can be grooved 1/16" deep with a pocket knife or sharp pick with moderate or heavy pressure. Breaks with light hammer blow or heavy manual pressure.
Soft	Specimen can be grooved or gouged easily by a pocket knife or sharp pick with light pressure, can be scratched with fingernail. Breaks with light to moderate manual pressure.
Very Soft	Specimen can be readily indented, grooved or gouged with fingernail, or carved with a pocket knife. Breaks with light manual pressure.

FRACTURE DENSITY

Description	Observed Fracture Density
Unfractured	No fractures.
Very slightly fractured	Lengths greater than 3 feet.
Slightly fractured	Lengths from 1 to 3 feet with few lengths less than 1 foot or greater than 3 feet.
Moderately fractured	Lengths mostly in 4" to 1 foot range with most lengths about 8"
Intensely fractured	Lenghts average from 1" to 4" with scattered fragmented intervals with lengths less than 4 in.
Very intensely fractured	Mostly chips and fragments with a few scattered short core lengths.

Combination descriptors (such as "Very intensely to intensely fractured") are used where equal distribution of both fracture density characteristics is present over a significant interval or exposure, or where characteristics are "in between" the descriptor definitions. Only two adjacent descriptors may be combined.

WEATHERING DESCRIPTORS FOR INTACT ROCK

Description	Diagnostic features					General Characteristics
	Chemical weathering–Discoloration and/or oxidation		Mechanical Weathering–Grain boundary conditions (disaggregation) primarily for granitics and some coarse–grained sediments	Texture and solutioning		
	Body of rock	Fracture Surfaces		Texture	Solutioning	
Fresh	No discoloration, not oxidized.	No discoloration or oxidation.	No separation, intact (tight).	No change.	No solutioning.	Hammer rings when crystalline rocks are struck.
Slightly Weathered	Discoloration or oxidation is limited to surface of, or short distance from, fractures; some feldspar crystals are dull.	Minor to complete discolorization or oxidation of most surfaces.	No visible separation, intact (tight).	Preserved.	Minor leaching of some soluble minerals may be noted.	Hammer rings when crystalline rocks are struck. Body of rock not weakened.
Moderately Weathered	Discoloration or oxidation extends from fractures usually throughout; Fe–Mg minerals are "rusty", feldspar crystals are "cloudy".	All fracture surfaces are discolored or oxidized.	Partial separation of boundaries visible.	Generally preserved.	Soluble minerals may be mostly leached.	Hammer does not ring when rock is struck. Body of rock is slightly weakened.
Intensely Weathered	Discoloration or oxidation throughout; all feldspars and Fe–Mg minerals are altered to clay to some extent; or chemical alteration produces in–situ disaggregation, see grain boundary conditions.	All fracture surfaces are discolored or oxidized, surfaces friable.	Partial separation, rock is friable; in semiarid conditions granitics are disaggregated.	Texture altered by chemical disintegration (hydration, argillation).	Leaching of soluble minerals may be complete.	Dull sound when struck with hammer, usually can be broken with moderate to heavy manual pressure or by light hammer blow without reference to planes of weakness such as incipient or hairline fractures, or veinlets. Rock is significantly weakened.
Decomposed	Discolored or oxidized throughout, but resistant minerals such as quartz may be unaltered; all feldspars and Fe–Mg minerals are completely altered to clay.		Complete separation of grain boundaries (disaggregated).	Resembles a soil, partial or complete remnant rock structure may be preserved; leaching of soluble minerals usually complete.		Can be granulated by hand. Resistant minerals such as quartz may be present as "stringers" or "dikes".

Combination descriptors (such as "slightly weathered to fresh") are used where equal distribution of both weathering characteristics is present over significant intervals or where characteristics present are "in between" the diagnostic features. However, combination descriptors should not be used where significant, identifiable zones can be delineated. Only two adjacent descriptors may be combined. "Very intensely weathered" is the combination descriptor for "intensely weathered to decomposed".

ROCK LEGEND

DEAD HORSE SLOUGH BRIDGE (WIDEN)

LOG OF TEST BORINGS 4 OF 5

ENGINEERING SERVICES

FUNCTIONAL SUPERVISOR: Eric Indelicato 11-21-11

DRAWN BY: M. ROBERTSON

CHECKED BY: W. E. NICHOLS

GEOTECHNICAL SERVICES

FIELD INVESTIGATION BY: K. CHAPMAN

BCI File No. 1202.1

PREPARED FOR THE STATE OF CALIFORNIA DEPARTMENT OF TRANSPORTATION

JULIE PASSALACQUA
PROJECT ENGINEER

BRIDGE NO. 12-0135

POST MILES 11.08

CU 03
EA 1E4901

FOUNDATION PLAN SHEET (ENGLISH) (REV. 06-01-09)

ORIGINAL SCALE IN INCHES FOR REDUCED PLANS 0 1 2 3

DISREGARD PRINTS BEARING EARLIER REVISION DATES

REVISION DATES (PRELIMINARY STAGE ONLY) 10/27/10 05/26/11 11/14/11

SHEET 16 OF 17

FILE => $REQUEST

12021 Dead Horse Slough Bridge (Widen) LOTB.dwg

11/14/2011

DATE PLOTTED => $DATE TIME PLOTTED => $TIME

FED. ROAD DIST. NO.	STATE	PROJ. NO.	FISCAL YEARS	SHEET NO.	TOTAL SHEETS
7	CAL.	S-7561		34	39

DIST.	COUNTY	ROUTE	PROJECT	SHEET	TOTAL SHEETS
III	Bu.	32	B	8	3

February 25, 1957

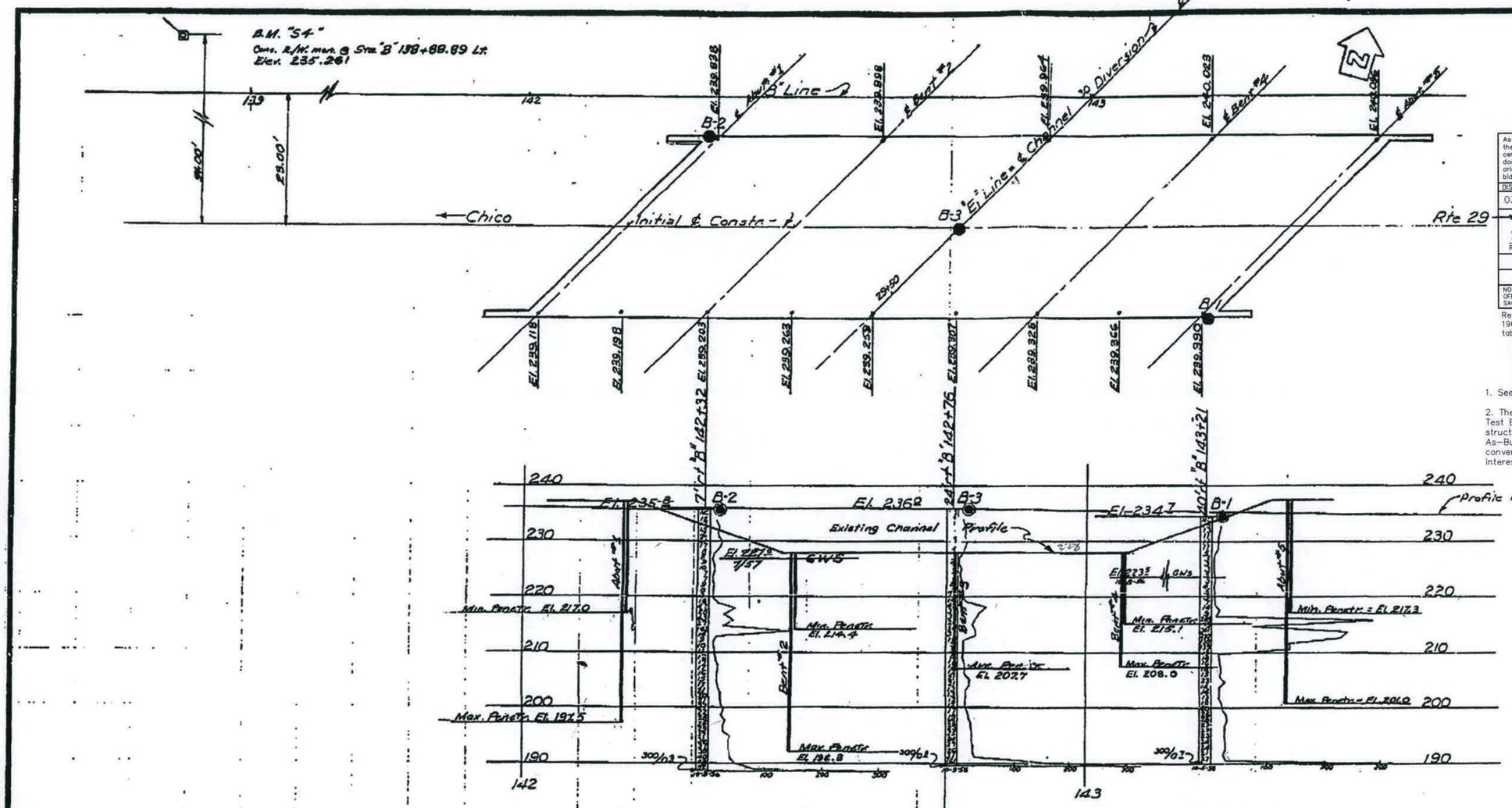

As-Built Log of Test Borings sheet is considered an informational document only. As such, the State of California registration seal with signature, license number and registration certificate expiration date confirm that this is a true and accurate copy of the original document. It does not attest to the accuracy or validity of the information contained in the original document. This drawing is available and presented only for the convenience of any bidder, contractor or other interested party.

DIST.	COUNTY	ROUTE	POST MILES–TOTAL PROJECT	SHEET NO.	TOTAL SHEETS
03	But	32	10.3/11.3	144	144

REGISTERED ENGINEERING GEOLOGIST — DATE 11/14/11

DEAD HORSE SLOUGH BRIDGE (WIDEN)

LOG OF TEST BORINGS 5 of 5

NOTE: A COPY OF THIS LOG OF TEST BORINGS IS AVAILABLE AT OFFICE OF STRUCTURE MAINTENANCE AND INVESTIGATIONS, SACRAMENTO, CALIFORNIA.

CU: 03
EA: 1E4901

BRIDGE NO. 12-0135

SHEET 17 OF 17

Revisions made to this Log of Test Borings from the original 1963 Log of Test Borings are the addition of the following table and notes.

Boring	Station	Offset from Line "B"
B-1	143+44.1	16.3 ft Rt
B-2	142+55.3	16.3 ft Lt
B-3	142+99.7	00.3 ft Rt

1. See Log of Test Borings 1 of 5 for stationing.

2. The table above are the locations for the As-Built Test Borings referenced to the proposed new structure location. This table is presented on the As-Built Log of Test Boring sheet for the convenience of any bidder, contractor or other interested party.

PROFESSIONAL GEOLOGIST — William E. Nichols — No. 2229 — Exp. 1-31-12 — STATE OF CALIFORNIA

BM B-139

Spike in crack of NE conc. Wing wall of Bridge on Forest Ave. 200'± lt "B" 138+60 Elev. 235.56

AS BUILT PLANS

Chico to Hog Springs
III-But-47-B
Contract 57-32C37-F
S-701(1)

CONTRACT 57-32C37-F
M. E. Ryan Sr.
R.E.
8 NOV 1967

BRIDGE DEPARTMENT

FIELD STUDY	W. Nichols	10-25
DRAWN	L. Durr	10-25
CHECKED	L. C. Hardt	12-96

Approval Recommended by: [signature]

Classification of Material Based on Standard Grade Size Limits

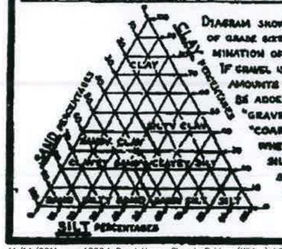

Diagram showing the basis for estimates of grade size distribution used in determination of class names.

If gravel is present in appreciable amounts the term "gravelly" may be added to the class name, viz. "gravelly sand." The terms "coarse," "medium" and "fine" when used to describe sand, silt and gravel, refer to standard grade size limits.

Legend of Earth Materials

- Gravel
- Sand
- Silt
- Clay
- Sandy Clay or Clayey Sand
- Sandy Silt or Silty Sand
- Silty Clay or Clayey Silt
- Peat and/or Organic Matter
- Fill Material
- Igneous Rock
- Sedimentary Rock
- Metamorphic Rock

Legend of Boring Operations

- Plan of any boring
- Penetrometer
- 2½" Core Penetrometer
- Sampler boring (dry)
- Rotary boring (wet)
- Auger boring (dry)
- Jet boring
- Core boring
- Test pit

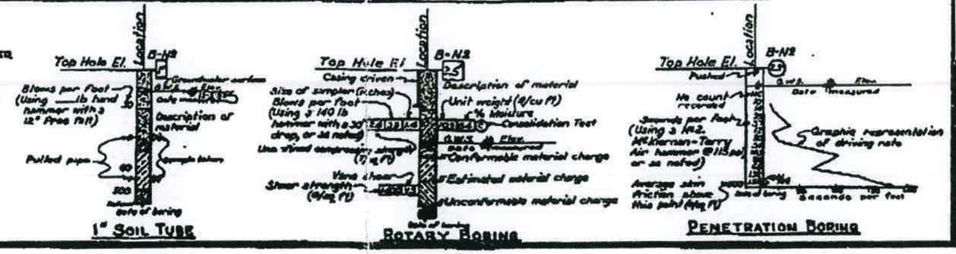

Notes

The contractor's attention is directed to Section 2, Article (c) of the Standard Specifications and to the Special Provisions accompanying this set of plans.

Classification of earth material as shown on this sheet is based upon field inspection and is not to be construed to imply mechanical analysis.

STATE OF CALIFORNIA
DEPARTMENT OF PUBLIC WORKS
DIVISION OF HIGHWAYS

DEAD HORSE SLOUGH

LOG OF TEST BORINGS

SCALE	BRIDGE	FILE	DRAWING
1" = 10'	12-135	E-72	B-5205-5

34

11/14/2011 1202.1 Dead Horse Slough Bridge (Widen) LOTB.dwg