Dist	COUNTY	ROUTE	POST MILES TOTAL PROJECT	SHEET No.	TOTAL SHEETS
03	But	32	10.1/10.5	1	126

INDEX OF PLANS

SHEET No.	DESCRIPTION
1	TITLE AND LOCATION MAP
2–10	TYPICAL SECTIONS
11	PROJECT CONTROL
12–13	LAYOUTS
14–15	LAYOUTS (DEMOLITION PLAN)
16	PROFILE AND SUPERELEVATION DIAGRAM
17–28	CONSTRUCTION DETAILS
29–31	EROSION CONTROL QUANTITIES
32–40	DRAINAGE PLANS, PROFILES, DETAILS AND QUANTITIES
41–42	UTILITY PLANS AND DETAILS
43	CONSTRUCTION AREA SIGNS
44–46	STAGE CONSTRUCTION PLANS
47–53	TRAFFIC HANDLING PLANS, DETAILS, AND QUANTITIES
54–55	DETOUR PLAN
56–60	PAVEMENT DELINEATION PLANS, DETAILS AND QUANTITIES
61–78	SIGN PLANS, DETAILS AND QUANTITIES
79–81	SUMMARY OF QUANTITIES
82–116	ELECTRICAL PLANS
117–126	LANDSCAPE PLANS

STATE OF CALIFORNIA

DEPARTMENT OF TRANSPORTATION

PROJECT PLANS FOR CONSTRUCTION ON

STATE HIGHWAY

IN BUTTE COUNTY
IN CHICO
ON STATE ROUTE 32
FROM 0.1 MILE WEST OF STATE ROUTE 99
TO 0.3 MILE EAST OF STATE ROUTE 99

TO BE SUPPLEMENTED BY 2010 STANDARD PLANS
AND CITY OF CHICO STANDARD PLANS (LATEST EDITION)

CITY PROJECT NAME: STATE ROUTE 32 WIDENING PROJECT (PHASE II)
BUDGET ACCOUNT NUMBER: MAJGC/15010-300-4150
FEDERAL PROJECT NUMBER: CML-5037(026)

LOCATION MAP

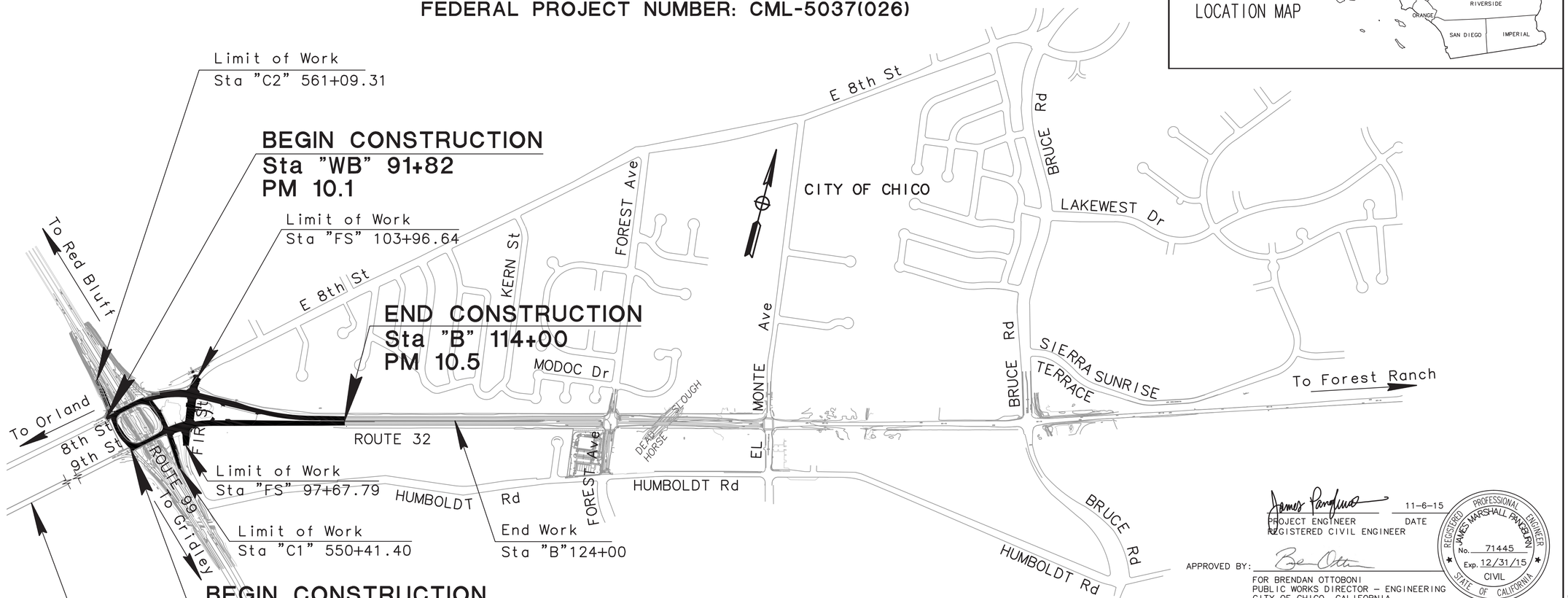

THE CONTRACTOR SHALL POSSESS THE CLASS (OR CLASSES) OF LICENSE AS SPECIFIED IN THE "NOTICE TO BIDDERS."

NO SCALE

James Pangburn 11-6-15
PROJECT ENGINEER DATE
REGISTERED CIVIL ENGINEER

REGISTERED PROFESSIONAL ENGINEER JAMES MARSHALL PANGBURN No. 71445 Exp. 12/31/15 CIVIL STATE OF CALIFORNIA

APPROVED BY: _____
FOR BRENDAN OTTOBONI
PUBLIC WORKS DIRECTOR – ENGINEERING
CITY OF CHICO, CALIFORNIA
DATE: 11-13-15

MARK THOMAS & COMPANY, INC.
7300 FOLSOM BLVD. SUITE 203
SACRAMENTO, CA 95826

CITY OF CHICO
CAPITAL PROJECT SERVICES
411 MAIN STREET
CHICO, CA 95928

CONTRACT No.	03-1E4914
PROJECT ID	0313000246

APPROVED AS TO IMPACT ON STATE FACILITIES AND CONFORMANCE WITH APPLICABLE STATE STANDARDS AND PRACTICES AND THAT TECHNICAL OVERSIGHT WAS PERFORMED.

CONSULTANT DESIGN ENGINEER	CALTRANS DESIGN OVERSIGHT APPROVAL	REGISTRATION No.	LICENSE Exp DATE	DATE SIGNED
JAMES MARSHALL PANGBURN	SCOTT W. MANN	72005	6/30/16	6/2015

LAST REVISION DATE PLOTTED => $DATE
00-00-00 TIME PLOTTED => $TIME

PATH: V:\Chico-55-0131-SR32 Widening\CADD\Phase 2 - SR 99 to East of Park and Ride\Drawing\sr32_T1 PLOT DATE: Nov 18, 2015-07:19:29am CAD USER: kfriedrich

BORDER LAST REVISED 7/2/2010 | CALTRANS WEB SITE IS: HTTP//WWW.DOT.CA.GOV/ | RELATIVE BORDER SCALE IS IN INCHES 0 1 2 3 | USERNAME => $USER DGN FILE => $REQUEST | UNIT 0000 | PROJECT NUMBER & PHASE 0313000246

Dist	COUNTY	ROUTE	POST MILES TOTAL PROJECT	SHEET No.	TOTAL SHEETS
03	But	32	10.1/10.5	2	126

11-6-15
REGISTERED CIVIL ENGINEER DATE

NOVEMBER 13, 2015
PLANS APPROVAL DATE

REGISTERED PROFESSIONAL ENGINEER
JAMES MARSHALL PANGBURN
No. 71445
Exp. 12/31/15
CIVIL
STATE OF CALIFORNIA

THE STATE OF CALIFORNIA OR ITS OFFICERS OR AGENTS SHALL NOT BE RESPONSIBLE FOR THE ACCURACY OR COMPLETENESS OF SCANNED COPIES OF THIS PLAN SHEET.

MARK THOMAS & CO., INC.
7300 FOLSOM BLVD STE 203
SACRAMENTO, CA 95826

CITY OF CHICO
CAPITAL PROJECT SERVICES
411 MAIN STREET
CHICO, CA 95927

NOTES:

1. DIMENSIONS OF THE PAVEMENT STRUCTURES (STRUCTURAL SECTIONS) ARE SUBJECT TO TOLERANCES SPECIFIED IN THE STANDARD SPECIFICATIONS.
2. FOR EXACT CURB/DIKE TYPE AND LIMITS, SEE LAYOUT AND CONSTRUCTION DETAIL SHEETS.
3. SUPER ELEVATION AS SHOWN OR AS DIRECTED BY THE ENGINEER.
4. PLACE HMA DIKE ON MINIMUM OF 0.15' THICK HOT MIX ASPHALT.
5. PROFILE GRADE IS AT TOP OF DENSE GRADED HOT MIX ASPHALT.
6. SLOPE ROUNDING AS SHOWN OR AS DIRECTED BY THE ENGINEER. OMIT SLOPE ROUNDING ON SLOPES FLATTER THAN 4:1.
7. FOR DRAINAGE BEYOND BACK OF CURB, SEE DRAINAGE PLANS.
8. SEE LAYOUT SHEETS AND CONSTRUCTION DETAILS FOR EXACT LIMITS OF HMA-A OVERLAY, AND HMA-O OVERLAY.

DESIGN DESIGNATION:

STATE ROUTE 32
2020 ADT = 27,200
2030 ADT = 33,400
TI (10 YEARS) = 9.5
TI (20 YEARS) = 10.5
R-VALUE = 19
D = 55%
T = 5%
V = 50 MPH
ESAL = 3,652,400
DHV = 3,170

LEGEND:

OBLITERATE SURFACING
LANDSCAPING (SEE LANDSCAPE PLANS)

STRUCTURAL SECTIONS:

1
0.10' HMA-O
0.55' HMA-A
1.60' CLASS 2 AB

2
0.35' MINOR CONCRETE (SIDEWALK)
0.50' CLASS 2 AB

3
0.50' CLASS 2 AB

4
1.50' HMA-A

5
0.15' HMA-O
0.65' HMA-A
1.80' CLASS 2 AB

6
0.35' MINOR CONCRETE (STAMPED CONCRETE)
0.50' CLASS 2 AB

7
1.25' HMA-A

8
0.55' HMA-A
1.60' CLASS 2 AB

9
0.10' HMA-O
0.80' HMA-A

10
0.65' HMA-A
1.95' CLASS 2 AB

11
0.10' HMA-O
0.65' HMA-A
1.95' CLASS 2 AB

EXISTING STRUCTURAL SECTION:

A
0.25' AC
0.50' AB
0.67' AS

B
0.15' RHMA
0.65' HMA
1.80' AB

C
0.25' AC
1.00' AB

D
0.25' AC
0.67' AB
0.92' AS

NON-STANDARD ABBREVIATIONS:

BOW	BACK OF WALK
BOC	BACK OF CURB
C&G	CURB AND GUTTER
CG&SW	CURB, GUTTER & SIDEWALK
C.O.C.	CITY OF CHICO
CFIPR	COLD FOAM IN-PLACE RECYCLING
FOW	FACE OF WALK
GB	GRADE BREAK
LG	LIP OF GUTTER
HMA-A	HOT MIX ASPHALT (TYPE A)
HMA-O	HOT MIX ASPHALT - OPEN GRADED (OPEN GRADED FRICTION COURSE)
PSE	PUBLIC SERVICE EASEMENT
Saw	SAWCUT
SBTG	STEEL-BACKED TIMBER GUARDRAIL

NON-STANDARD SYMBOLS:

XX — DETAIL
XX — SHEET NUMBER

TYPICAL CROSS SECTIONS
NO SCALE

X-1

REVISED BY | DATE REVISED
E. WEEKS | J. PANGBURN
CALCULATED-DESIGNED BY | CHECKED BY
CONSULTANT FUNCTIONAL SUPERVISOR: JAMES MARSHALL PANGBURN
STATE OF CALIFORNIA - DEPARTMENT OF TRANSPORTATION
Caltrans

LAST REVISION 00-00-00 | DATE PLOTTED => $DATE | TIME PLOTTED => $TIME

BORDER LAST REVISED 7/2/2010 | USERNAME => $USER | DGN FILE => $REQUEST | RELATIVE BORDER SCALE IS IN INCHES 0 1 2 3 | UNIT 0000 | PROJECT NUMBER & PHASE 0313000246

PATH: V:\Chico-55-0131-SR32 widening\CADD\Phase 2 - SR 99 to East of Park and Ride\Drawing\sr32_X1-X5 PLOT DATE: Nov 18, 2015-07:21:21am CAD USER: kfriedrich

NOTES:

1. SEE SHEET X–1 FOR ADDITIONAL NOTES.

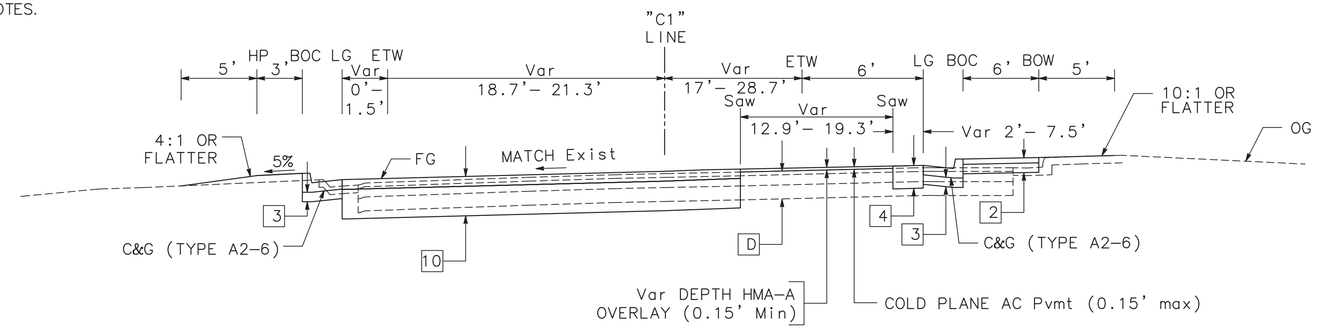

NB OFF RAMP (COUPLET)

"C1" 556+75.00 TO "C1" 557+24.77

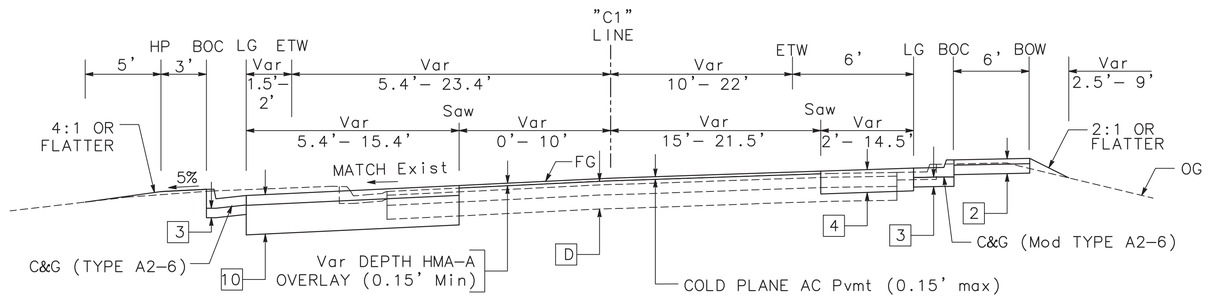

NB OFF RAMP (COUPLET)

"C1" 554+02.64 TO "C1" 556+75.00

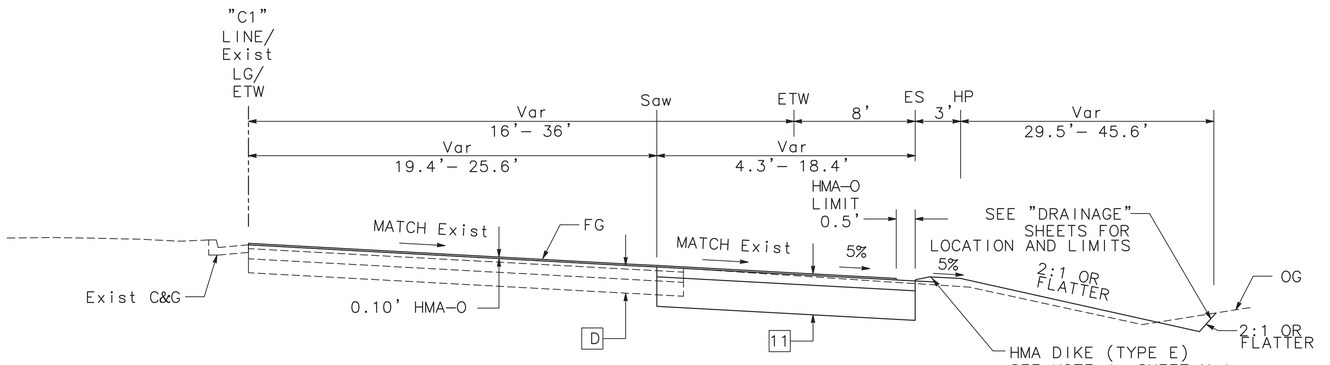

NB OFF RAMP

"C1" 550+41.40 TO "C1" 554+02.64

TYPICAL CROSS SECTIONS

NO SCALE

X-2

Dist	COUNTY	ROUTE	POST MILES TOTAL PROJECT	SHEET No.	TOTAL SHEETS
03	But	32	10.1/10.5	3	126

11–6–15
REGISTERED CIVIL ENGINEER DATE

JAMES MARSHALL PANGBURN No. 71445 Exp. 12/31/15 CIVIL — REGISTERED PROFESSIONAL ENGINEER — STATE OF CALIFORNIA

NOVEMBER 13, 2015
PLANS APPROVAL DATE

THE STATE OF CALIFORNIA OR ITS OFFICERS OR AGENTS SHALL NOT BE RESPONSIBLE FOR THE ACCURACY OR COMPLETENESS OF SCANNED COPIES OF THIS PLAN SHEET.

MARK THOMAS & CO., INC.
7300 FOLSOM BLVD STE 203
SACRAMENTO, CA 95826

CITY OF CHICO
CAPITAL PROJECT SERVICES
411 MAIN STREET
CHICO, CA 95927

REVISED BY	DATE REVISED

CALCULATED–DESIGNED BY: E. WEEKS
CHECKED BY: J. PANGBURN

CONSULTANT FUNCTIONAL SUPERVISOR: JAMES MARSHALL PANGBURN

STATE OF CALIFORNIA – DEPARTMENT OF TRANSPORTATION
Caltrans

LAST REVISION | DATE PLOTTED => $DATE
00–00–00 | TIME PLOTTED => $TIME

PATH: V:\Chico-55-0131-SR32 Widening\CADD\Phase 2 - SR 99 to East of Park and Ride\Drawing\sr32_X1-X5 PLOT DATE: Nov 18, 2015-07:2156am CAD USER: kfriedrich

BORDER LAST REVISED 7/2/2010
USERNAME => $USER
DGN FILE => $REQUEST
RELATIVE BORDER SCALE IS IN INCHES 0 1 2 3
UNIT 0000
PROJECT NUMBER & PHASE 0313000246

NOTES:

1. SEE SHEET X-1 FOR ADDITIONAL NOTES.

Dist	COUNTY	ROUTE	POST MILES TOTAL PROJECT	SHEET No.	TOTAL SHEETS
03	But	32	10.1/10.5	4	126

11-6-15
REGISTERED CIVIL ENGINEER DATE

NOVEMBER 13, 2015
PLANS APPROVAL DATE

REGISTERED PROFESSIONAL ENGINEER
JAMES MARSHALL PANGBURN
No. 71445
Exp. 12/31/15
CIVIL
STATE OF CALIFORNIA

THE STATE OF CALIFORNIA OR ITS OFFICERS OR AGENTS SHALL NOT BE RESPONSIBLE FOR THE ACCURACY OR COMPLETENESS OF SCANNED COPIES OF THIS PLAN SHEET.

MARK THOMAS & CO., INC.
7300 FOLSOM BLVD STE 203
SACRAMENTO, CA 95826

CITY OF CHICO
CAPITAL PROJECT SERVICES
411 MAIN STREET
CHICO, CA 95927

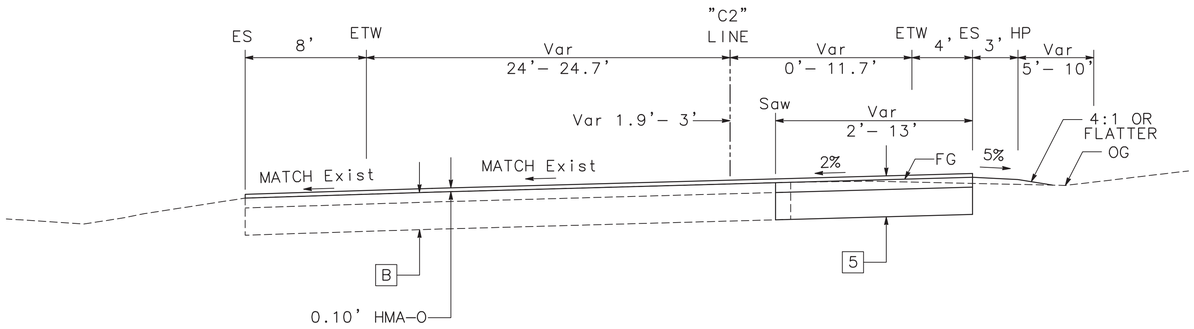

SB OFF RAMP

"C2" 557+51.21 TO "C2" 561+09.31

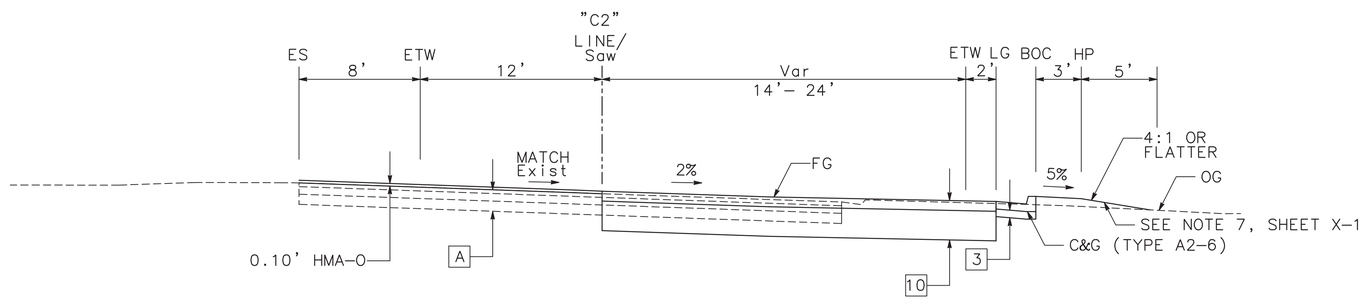

SB OFF RAMP (COUPLET)

"C2" 554+08.67 TO "C2" 557+51.21

TYPICAL CROSS SECTIONS

NO SCALE

X-3

STATE OF CALIFORNIA - DEPARTMENT OF TRANSPORTATION
Caltrans

CONSULTANT FUNCTIONAL SUPERVISOR: JAMES MARSHALL PANGBURN
CALCULATED-DESIGNED BY: E. WEEKS
CHECKED BY: J. PANGBURN
REVISED BY
DATE REVISED

LAST REVISION 00-00-00
DATE PLOTTED => $DATE
TIME PLOTTED => $TIME

PATH: V:\Chico-55-0131-SR32 Widening\CADD\Phase 2 - SR 99 to East of Park and Ride\Drawing\sr32_X1-X5 PLOT DATE: Nov 18, 2015-07:22:27am CAD USER: kfriedrich

BORDER LAST REVISED 7/2/2010
USERNAME => $USER
DGN FILE => $REQUEST
RELATIVE BORDER SCALE IS IN INCHES 0 1 2 3
UNIT 0000
PROJECT NUMBER & PHASE 0313000246

NOTES:

1. SEE SHEET X-1 FOR ADDITIONAL NOTES.

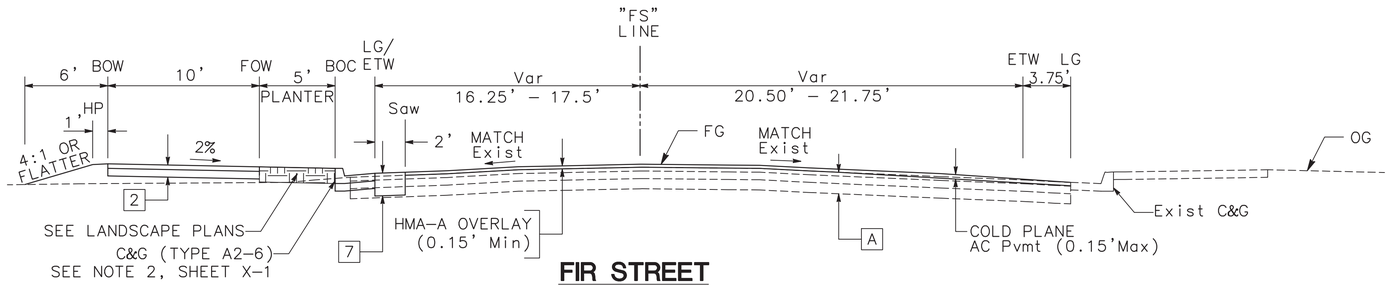

FIR STREET

"FS"102+13.42 TO "FS"104+10.44

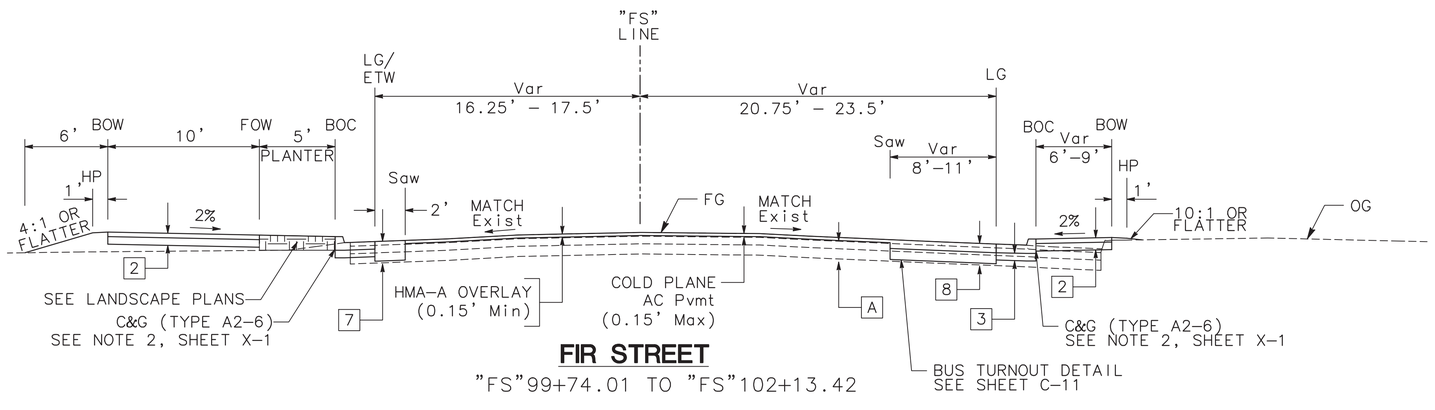

FIR STREET

"FS"99+74.01 TO "FS"102+13.42

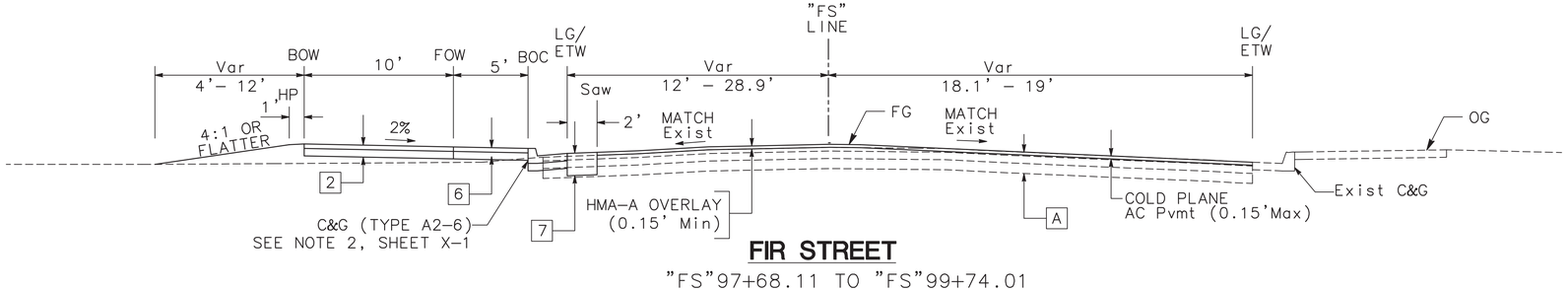

FIR STREET

"FS"97+68.11 TO "FS"99+74.01

TYPICAL CROSS SECTIONS

NO SCALE

X-4

Dist	COUNTY	ROUTE	POST MILES TOTAL PROJECT	SHEET No.	TOTAL SHEETS
03	But	32	10.1/10.5	5	126

11-6-15
REGISTERED CIVIL ENGINEER DATE

JAMES MARSHALL PANGBURN No. 71445 Exp. 12/31/15 CIVIL — REGISTERED PROFESSIONAL ENGINEER — STATE OF CALIFORNIA

NOVEMBER 13, 2015
PLANS APPROVAL DATE

THE STATE OF CALIFORNIA OR ITS OFFICERS OR AGENTS SHALL NOT BE RESPONSIBLE FOR THE ACCURACY OR COMPLETENESS OF SCANNED COPIES OF THIS PLAN SHEET.

MARK THOMAS & CO., INC.
7300 FOLSOM BLVD STE 203
SACRAMENTO, CA 95826

CITY OF CHICO
CAPITAL PROJECT SERVICES
411 MAIN STREET
CHICO, CA 95927

REVISED BY	DATE REVISED

CALCULATED-DESIGNED BY: E. WEEKS
CHECKED BY: J. PANGBURN
CONSULTANT FUNCTIONAL SUPERVISOR: JAMES MARSHALL PANGBURN
STATE OF CALIFORNIA - DEPARTMENT OF TRANSPORTATION
Caltrans

LAST REVISION: DATE PLOTTED => $DATE
00-00-00 TIME PLOTTED => $TIME

PATH: V:\Chico-55-0131-SR32 Widening\CADD\Phase 2 - SR 99 to East of Park and Ride\Drawing\sr32_X1-X5 PLOT DATE: Nov 18, 2015-07:22:57am CAD USER: kfriedrich

NOTES:

1. SEE SHEET X-1 FOR ADDITIONAL NOTES.

Dist	COUNTY	ROUTE	POST MILES TOTAL PROJECT	SHEET No.	TOTAL SHEETS
03	But	32	10.1/10.5	6	126

11-6-15
REGISTERED CIVIL ENGINEER DATE

REGISTERED PROFESSIONAL ENGINEER
JAMES MARSHALL PANGBURN
No. 71445
Exp. 12/31/15
CIVIL
STATE OF CALIFORNIA

NOVEMBER 13, 2015
PLANS APPROVAL DATE

THE STATE OF CALIFORNIA OR ITS OFFICERS OR AGENTS SHALL NOT BE RESPONSIBLE FOR THE ACCURACY OR COMPLETENESS OF SCANNED COPIES OF THIS PLAN SHEET.

MARK THOMAS & CO., INC.
7300 FOLSOM BLVD STE 203
SACRAMENTO, CA 95826

CITY OF CHICO
CAPITAL PROJECT SERVICES
411 MAIN STREET
CHICO, CA 95927

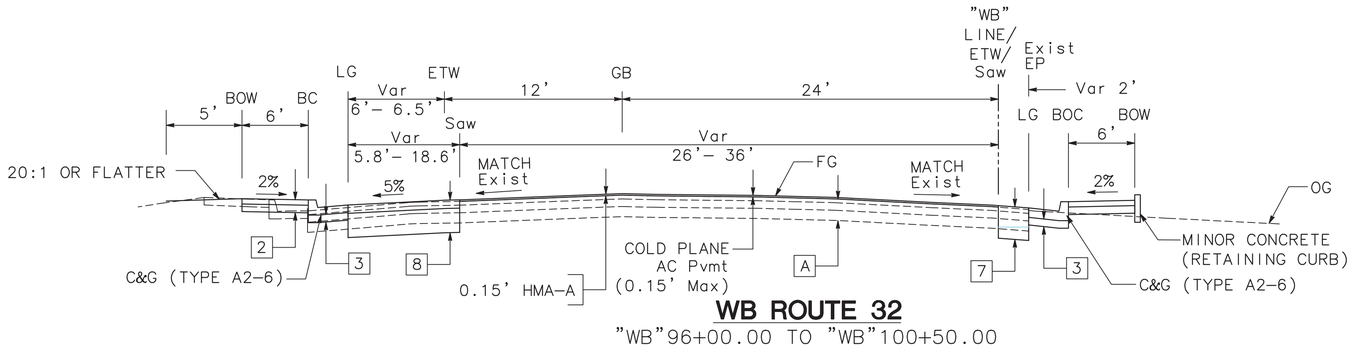

WB ROUTE 32
"WB"96+00.00 TO "WB"100+50.00

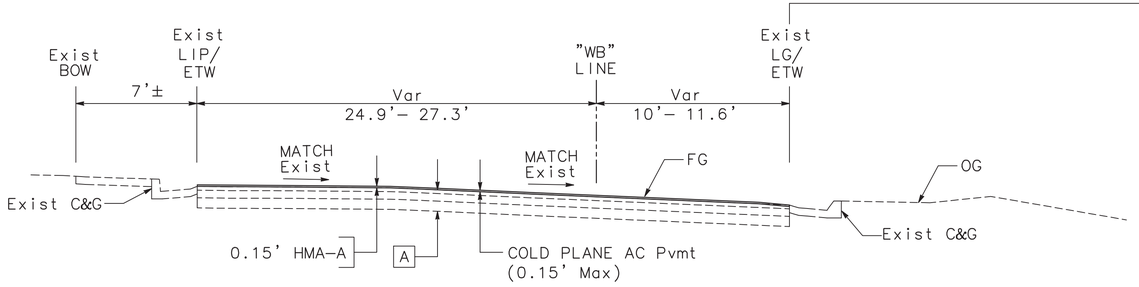

WB ROUTE 32
"WB"91+82.91 TO "WB"96+00.00

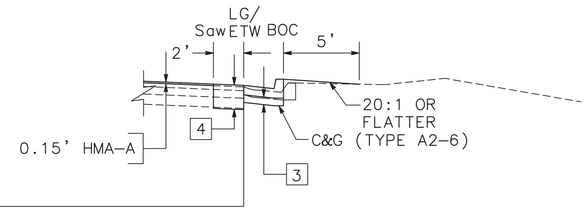

WB ROUTE 32
"WB"92+40.50 Rt TO "WB" 93+49.07 Rt
"WB"94+64.11 Rt TO "WB" 95+82.33 Rt

TYPICAL CROSS SECTIONS
NO SCALE

X-5

STATE OF CALIFORNIA - DEPARTMENT OF TRANSPORTATION
Caltrans
CONSULTANT FUNCTIONAL SUPERVISOR: JAMES MARSHALL PANGBURN
CALCULATED-DESIGNED BY: E. WEEKS
CHECKED BY: J. PANGBURN
REVISED BY
DATE REVISED

NOTES:

1. SEE SHEET X–1 FOR ADDITIONAL NOTES.

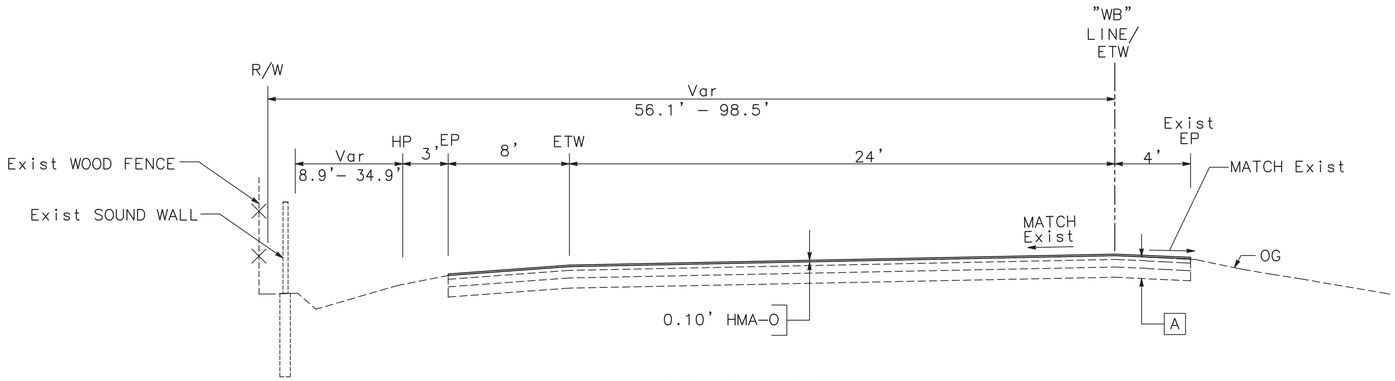

WB ROUTE 32

"WB"106+50.00 TO "WB"112+00.00

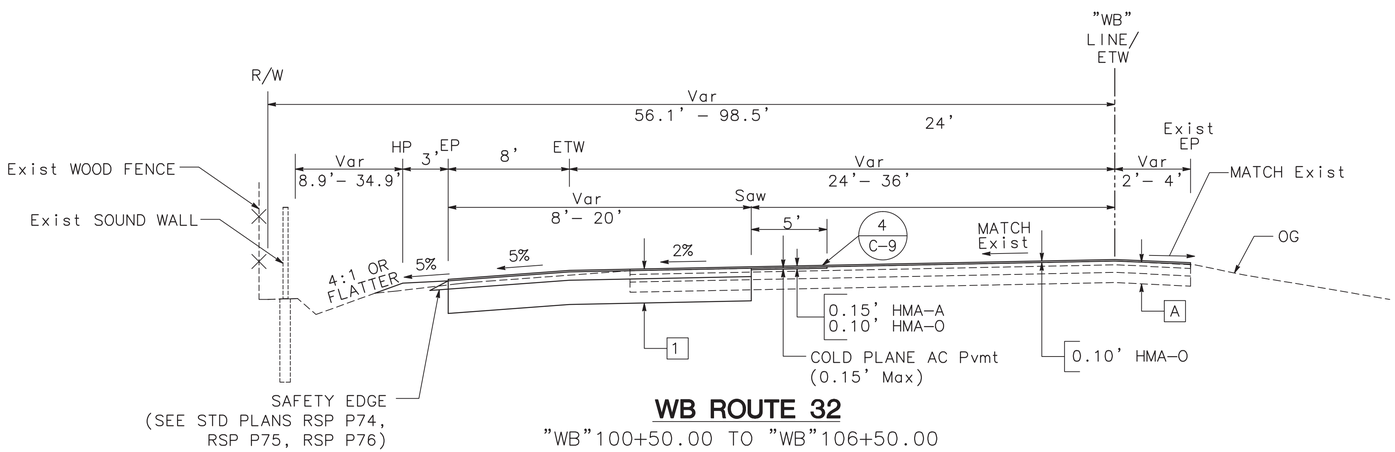

WB ROUTE 32

"WB"100+50.00 TO "WB"106+50.00

TYPICAL CROSS SECTIONS

NO SCALE

X-6

Dist	COUNTY	ROUTE	POST MILES TOTAL PROJECT	SHEET No.	TOTAL SHEETS
03	But	32	10.1/10.5	7	126

11–6–15
REGISTERED CIVIL ENGINEER DATE

JAMES MARSHALL PANGBURN No. 71445 Exp. 12/31/15 CIVIL — REGISTERED PROFESSIONAL ENGINEER — STATE OF CALIFORNIA

NOVEMBER 13, 2015
PLANS APPROVAL DATE

THE STATE OF CALIFORNIA OR ITS OFFICERS OR AGENTS SHALL NOT BE RESPONSIBLE FOR THE ACCURACY OR COMPLETENESS OF SCANNED COPIES OF THIS PLAN SHEET.

MARK THOMAS & CO., INC.
7300 FOLSOM BLVD STE 203
SACRAMENTO, CA 95826

CITY OF CHICO
CAPITAL PROJECT SERVICES
411 MAIN STREET
CHICO, CA 95927

REVISED BY | DATE REVISED
E. WEEKS | J. PANGBURN
CALCULATED–DESIGNED BY | CHECKED BY
CONSULTANT FUNCTIONAL SUPERVISOR
JAMES MARSHALL PANGBURN
STATE OF CALIFORNIA – DEPARTMENT OF TRANSPORTATION
Caltrans

LAST REVISION 00–00–00 | DATE PLOTTED => $DATE | TIME PLOTTED => $TIME

PATH: V:\Chico-55-0131-SR32 widening\CADD\Phase 2 - SR 99 to East of Park and Ride\Drawing\sr32_X1-X5 PLOT DATE: Nov 18, 2015-07:32:46am CAD USER: kfriedrich

NOTES:

1. SEE LAYOUT SHEETS FOR LIMITS OF OBLITERATE SURFACING.
2. SEE SHEET X-1 FOR ADDITIONAL NOTES.

Dist	COUNTY	ROUTE	POST MILES TOTAL PROJECT	SHEET No.	TOTAL SHEETS
03	But	32	10.1/10.5	8	126

11-6-15
REGISTERED CIVIL ENGINEER DATE

NOVEMBER 13, 2015
PLANS APPROVAL DATE

JAMES MARSHALL PANGBURN
No. 71445
Exp. 12/31/15
CIVIL
REGISTERED PROFESSIONAL ENGINEER
STATE OF CALIFORNIA

THE STATE OF CALIFORNIA OR ITS OFFICERS OR AGENTS SHALL NOT BE RESPONSIBLE FOR THE ACCURACY OR COMPLETENESS OF SCANNED COPIES OF THIS PLAN SHEET.

MARK THOMAS & CO., INC.
7300 FOLSOM BLVD STE 203
SACRAMENTO, CA 95826

CITY OF CHICO
CAPITAL PROJECT SERVICES
411 MAIN STREET
CHICO, CA 95927

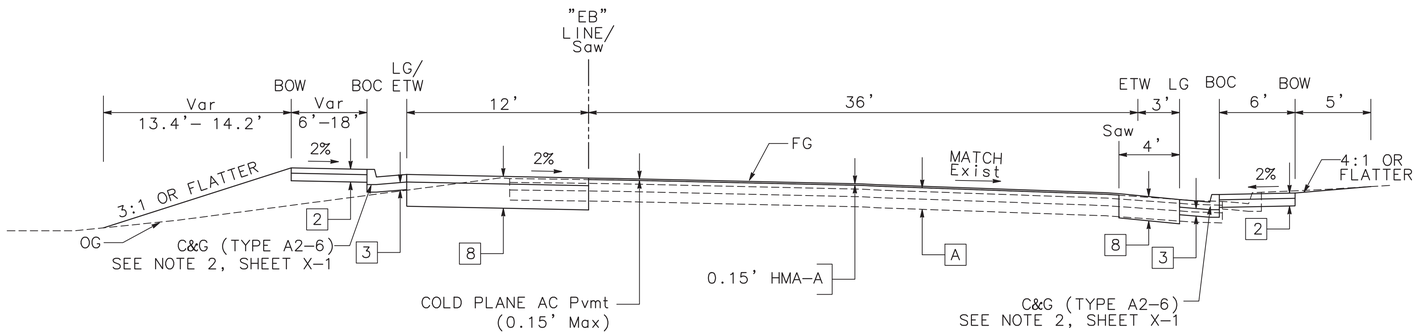

EB ROUTE 32

"EB"97+66.38 TO "EB"100+42.00

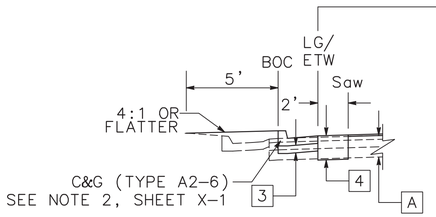

EB ROUTE 32

"EB"94+10.23 Lt TO "EB"95+35.71 Lt
"EB"96+57.45 Lt TO "EB"97+66.38 Lt

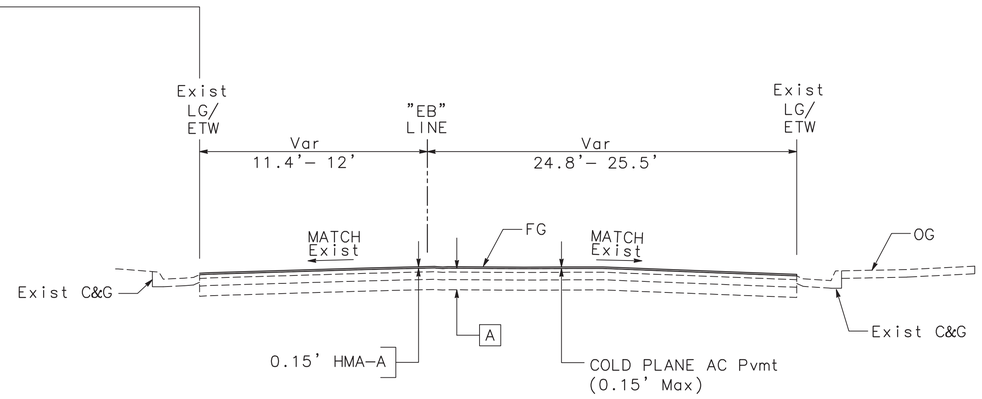

EB ROUTE 32

"EB"94+10.23 TO "EB"97+66.38

TYPICAL CROSS SECTIONS

NO SCALE

X-7

STATE OF CALIFORNIA - DEPARTMENT OF TRANSPORTATION
CONSULTANT FUNCTIONAL SUPERVISOR: JAMES MARSHALL PANGBURN
CALCULATED-DESIGNED BY: E. WEEKS
CHECKED BY: J. PANGBURN
REVISED BY
DATE REVISED

LAST REVISION 00-00-00
DATE PLOTTED => $DATE
TIME PLOTTED => $TIME

PATH: V:\Chico-55-0131-SR32 Widening\CADD\Phase 2 - SR 99 to East of Park and Ride\Drawing\sr32_X1-X5 PLOT DATE: Nov 18, 2015-07:33:18am CAD USER: kfriedrich

BORDER LAST REVISED 7/2/2010
USERNAME => $USER
DGN FILE => $REQUEST
RELATIVE BORDER SCALE IS IN INCHES 0 1 2 3
UNIT 0000
PROJECT NUMBER & PHASE 0313000246

NOTES:

1. SEE SHEET X-1 FOR ADDITIONAL NOTES.
2. SEE LAYOUT SHEETS FOR LIMITS OF OBLITERATE SURFACING.

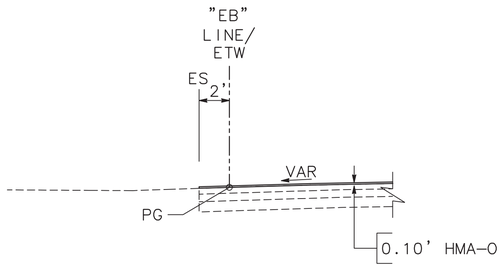

EB ROUTE 32
"EB"114+00.00 Lt TO
"EB"116+72.00 Lt

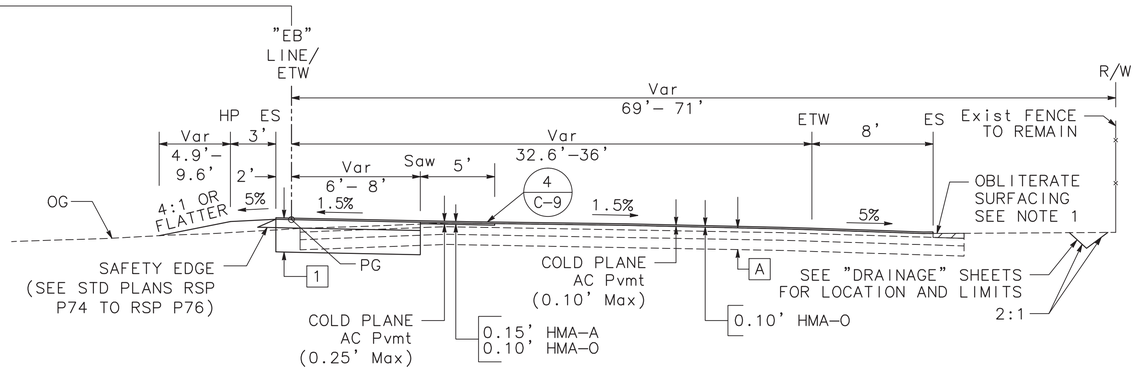

EB ROUTE 32
"EB"112+00.00 TO "B"116+72.00

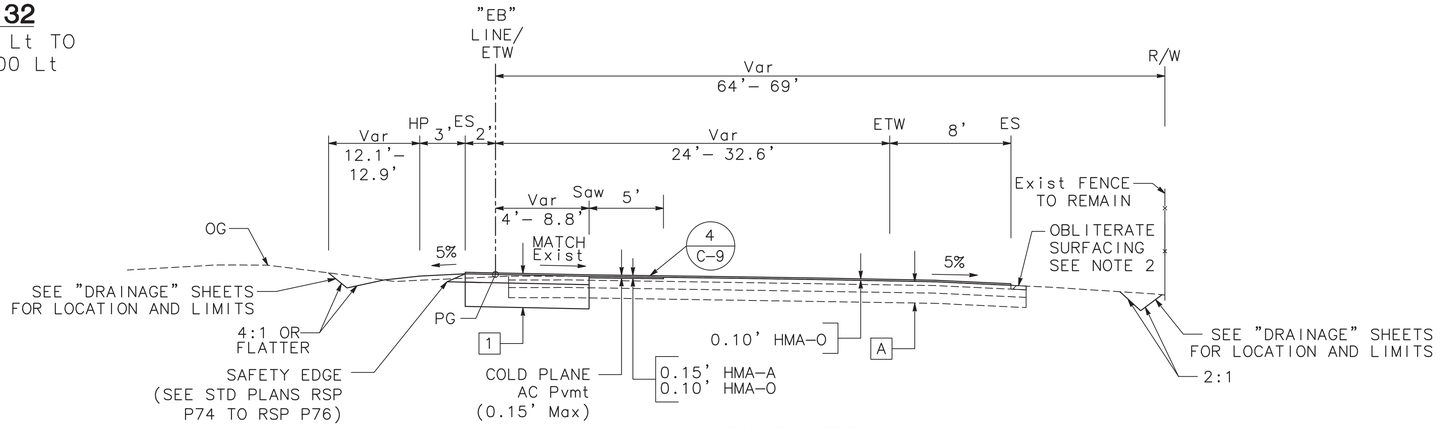

EB ROUTE 32
"EB"106+00.00 TO "EB"112+00.00

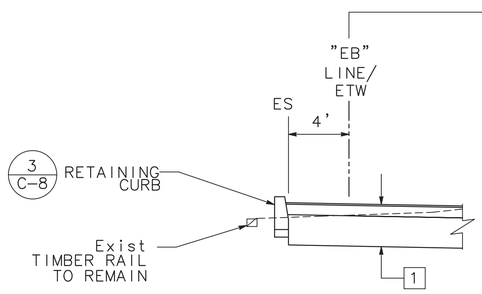

EB ROUTE 32
"EB"103+57.35 Lt TO
"EB"106+00.00 Lt

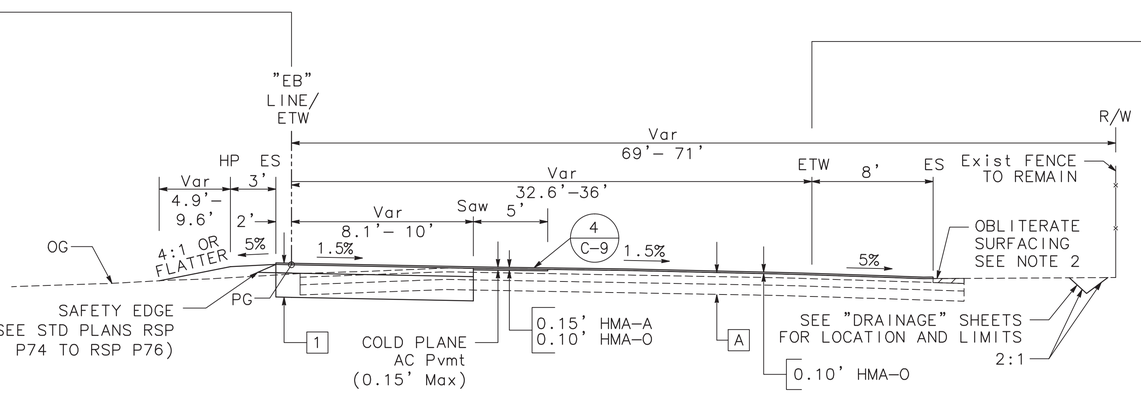

EB ROUTE 32
"EB"100+42.00 TO "EB"106+00.00

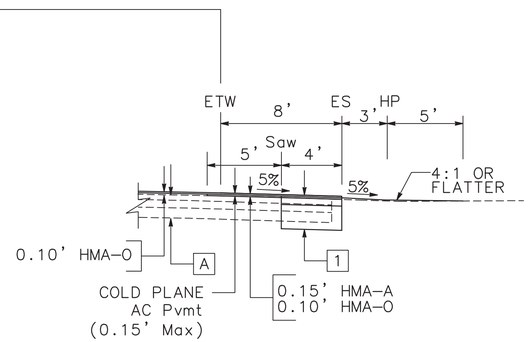

EB ROUTE 32
"EB"101+50.00 Rt TO "EB"106+00.00 Rt

TYPICAL CROSS SECTIONS

NO SCALE

X-8

Dist	COUNTY	ROUTE	POST MILES TOTAL PROJECT	SHEET No.	TOTAL SHEETS
03	But	32	10.1/10.5	9	126

11-6-15
REGISTERED CIVIL ENGINEER DATE

NOVEMBER 13, 2015
PLANS APPROVAL DATE

REGISTERED PROFESSIONAL ENGINEER
JAMES MARSHALL PANGBURN
No. 71445
Exp. 12/31/15
CIVIL
STATE OF CALIFORNIA

THE STATE OF CALIFORNIA OR ITS OFFICERS OR AGENTS SHALL NOT BE RESPONSIBLE FOR THE ACCURACY OR COMPLETENESS OF SCANNED COPIES OF THIS PLAN SHEET.

MARK THOMAS & CO., INC.
7300 FOLSOM BLVD STE 203
SACRAMENTO, CA 95826

CITY OF CHICO
CAPITAL PROJECT SERVICES
411 MAIN STREET
CHICO, CA 95927

REVISED BY	DATE REVISED

CALCULATED-DESIGNED BY: E. WEEKS
CHECKED BY: J. PANGBURN
CONSULTANT FUNCTIONAL SUPERVISOR: JAMES MARSHALL PANGBURN

STATE OF CALIFORNIA - DEPARTMENT OF TRANSPORTATION
Caltrans

LAST REVISION 00-00-00
DATE PLOTTED => $DATE
TIME PLOTTED => $TIME

BORDER LAST REVISED 7/2/2010
USERNAME => $USER
DGN FILE => $REQUEST
RELATIVE BORDER SCALE IS IN INCHES 0 1 2 3
UNIT 0000
PROJECT NUMBER & PHASE 0313000246

PATH: V:\Chico-55-0131-SR32 Widening\CADD\Phase 2 - SR 99 to East of Park and Ride\Drawings\sr32_X1-X5 PLOT DATE: Nov 18, 2015-07:33:46am CAD USER: kfriedrich

NOTES:

1. SEE SHEET X-1 FOR ADDITIONAL NOTES.
2. SEE LAYOUT SHEETS FOR LIMITS OF OBLITERATE SURFACING.

LEGEND (THIS SHEET ONLY)

EMBANKMENT

OBLITERATE SURFACING

ROADWAY EXCAVATION

REMOVE CONCRETE

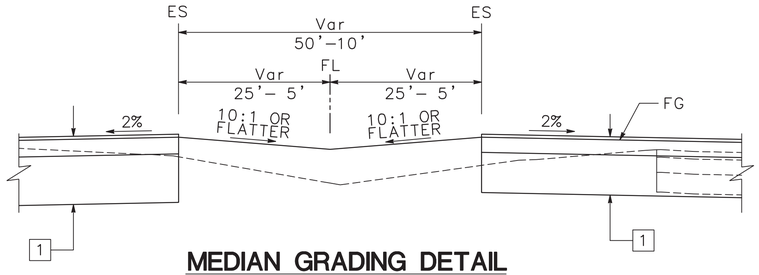

MEDIAN GRADING DETAIL

"B"109+00 TO "B"112+00.00

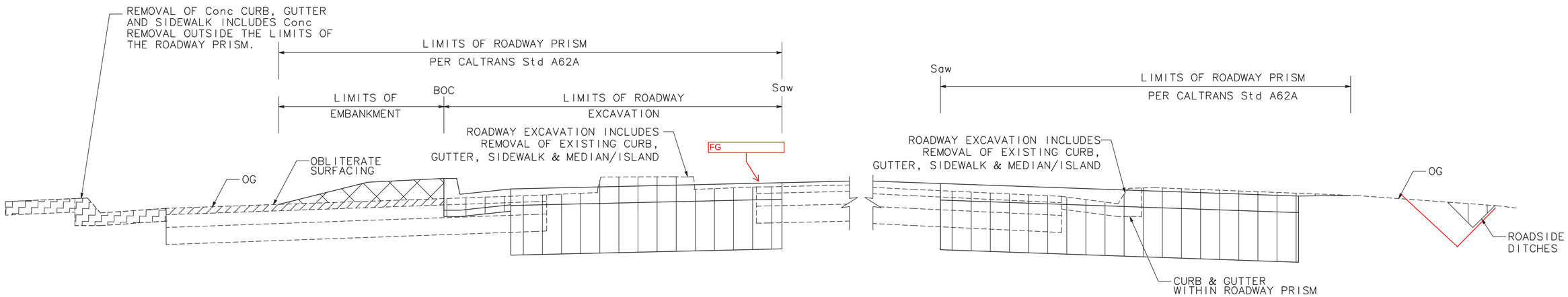

ROADWAY DEMOLITION PAYMENT DETAIL

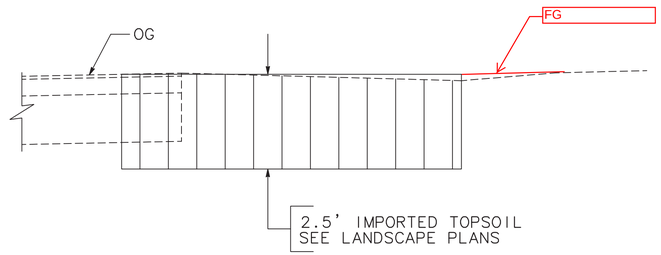

TOP SOIL PAYMENT DETAIL

TYPICAL CROSS SECTIONS

NO SCALE

X-9

Dist	COUNTY	ROUTE	POST MILES TOTAL PROJECT	SHEET No.	TOTAL SHEETS
03	But	32	10.1/10.5	10	126

11-6-15
REGISTERED CIVIL ENGINEER DATE

JAMES MARSHALL PANGBURN No. 71445 Exp. 12/31/15 CIVIL — REGISTERED PROFESSIONAL ENGINEER — STATE OF CALIFORNIA

NOVEMBER 13, 2015
PLANS APPROVAL DATE

THE STATE OF CALIFORNIA OR ITS OFFICERS OR AGENTS SHALL NOT BE RESPONSIBLE FOR THE ACCURACY OR COMPLETENESS OF SCANNED COPIES OF THIS PLAN SHEET.

MARK THOMAS & CO., INC.
7300 FOLSOM BLVD STE 203
SACRAMENTO, CA 95826

CITY OF CHICO
CAPITAL PROJECT SERVICES
411 MAIN STREET
CHICO, CA 95927

REVISED BY | DATE REVISED

CALCULATED-DESIGNED BY: E. WEEKS
CHECKED BY: J. PANGBURN

CONSULTANT FUNCTIONAL SUPERVISOR: JAMES MARSHALL PANGBURN

STATE OF CALIFORNIA - DEPARTMENT OF TRANSPORTATION

LAST REVISION: 00-00-00
DATE PLOTTED => $DATE
TIME PLOTTED => $TIME

PATH: V:\Chico-55-0131-SR32 Widening\CADD\Phase 2 - SR 99 to East of Park and Ride\Drawing\sr32_X1-X5 PLOT DATE: Nov 18, 2015-12:24:57pm CAD USER: kfriedrich

BORDER LAST REVISED 7/2/2010 | USERNAME => $USER | DGN FILE => $REQUEST | RELATIVE BORDER SCALE IS IN INCHES 0 1 2 3 | UNIT 0000 | PROJECT NUMBER & PHASE 0313000246

CONSTRUCTION SURVEY CONTROL DATA

No.	POINT #	NORTHING	EASTING	ELEVATION		APPROX. LOCATION
1	306	2394005.444	6612347.937	218.07		"EB" 93+43.84 7.26' Lt
2	45	2394071.451	6612612.194	236.92		"C" 552+83.70 1.01' Rt
3	44	2394299.759	6612690.013	221.62	PANEL	"EB" 97+94.88 4.54' Lt
4	2	2394559.944	6612466.745	221.09	PANEL	"WB" 96+36.14 31.03' Lt
5	100	2394849.061	6612817.452	222.76	100d NAIL	"FS" 104+16.38 29.29' Lt
6	46	2394679.003	6612882.376	222.43	PANEL	"WB" 100+56.49 36.65' Lt
7	43	2394417.654	6612864.782	222.95	PANEL	"EB" 100+04.24 11.53' Lt
8	1	2394085.704	6613073.497	220.47	PANEL	"B" 100+76.03 376.54' Rt
9	42	2394526.532	6613225.231	222.65	PANEL	"EB" 103+79.37 8.57' Lt
10	41	2394678.740	6613309.075	223.73	PANEL	"WB" 104+82.60 29.88' Lt
11	40	2394699.823	6613712.040	224.64	PANEL	"WB" 108+90.13 30.00' Lt
12	39	2394802.262	6614161.163	227.37	PANEL	"WB" 113+53.99 33.16' Lt
13	38	2394892.438	6614607.890	229.02	PANEL	"B" 118+09.67 16.58' Lt
14	36	2395092.766	6615483.081	234.20	PANEL	"B" 127+07.16 8.31' Rt
15	35	2395331.635	6616371.263	238.78	PANEL	"B" 136+26.85 0.88' Lt
16	2008	2395290.569	6616499.501	236.51	–	"F1" 9+19.88 64.34' Lt
17	2007	2395250.183	6616539.036	237.40	–	"F1" 8+75.03 29.96' Lt
18	108	2395425.580	6616578.949	240.34	SURVEY SPIKE	"F2" 10+44.44 32.00' Rt
19	34	2395439.082	6616810.209	242.16	PANEL	"B" 140+78.72 4.85' Rt
20	32	2395672.334	6617677.141	244.03	PANEL	"B" 149+76.44 4.21' Lt
21	30	2395895.321	6618549.110	249.09	PANEL	"B" 158+76.46 2.07' Lt
22	8	2395406.853	6618614.258	247.44	PANEL	"B" 158+17.40 487.17' Rt

DATUM

BEARINGS, DISTANCES AND COORDINATES SHOWN ARE CCS83 ZONE 2 EPOCH 1991.35. DISTANCES ARE IN US SURVEY FEET. AN AVERAGE COMBINED FACTOR OF 0.99997 WAS USED FOR THIS PROJECT. TO OBTAIN GROUND DISTANCE DIVIDE BY THE COMBINED GRID FACTOR.

ELEVATIONS ARE NAVD88, BASED ON NGS POINT "Y" (PID KS1931) HAVING AN ELEVATION OF 239.81 FEET.

ALL ELEVATIONS ARE DERIVED FROM GPS OBSERVATIONS AND AN ACCURATE GEOID MODEL, AS DETAILED IN THE REPORT ON FILE WITH CALTRANS. THE FOLLOWING BENCHMARKS WERE HELD TO DETERMINE NAVD 88 ELEVATIONS:

- KS1931–Y, A FIRST ORDER, CLASS II VERTICAL POSITION, LOCATED ON STATE ROUTE 99 NORTHWESTERLY OF THIS NETWORK AND IS OUTSIDE THE MAPPING LIMITS. A NAVD 88 ELEVATION OF 239.81 WAS HELD FOR THIS BENCHMARK.
- KS1933–P 1434, A FIRST ORDER, CLASS II VERTICAL POSITION, LOCATED WEST OF THIS NETWORK AND IS OUTSIDE THE MAPPING LIMITS. A NAVD 88 ELEVATION OF 210.80 FEET WAS HELD FOR THIS BENCHMARK.

ALL COORDINATES AND ELEVATIONS MUST BE VERIFIED PRIOR TO USE.

NOTES

1. FOR COMPLETE PROJECT CONTROL AND MONUMENTATION DATA, SEE THE SURVEY RECORDS ON FILE IN THE DISTRICT OFFICE.
2. CONTRACTOR SHALL COMPLY WITH BUSINESS AND PROFESSIONS CODE SECTION 8771(b) REGARDING REFERENCING, PRESERVING AND RECONSTRUCTING MONUMENTS, WHETHER OR NOT MONUMENTS ARE SHOWN IN THESE PLANS.
3. IF MONUMENT IS DAMAGED BY CONTRACTOR'S OPERATIONS, CONTRACTOR SHALL REPLACE AT CONTRACTOR'S COST.
4. "EB" AND "WB" LINES STATION 114+00 EQUAL "B" LINE STATION 114+00.
5. "B" LINE STATION 143+50 EQUALS "B1" LINE STATION 143+50.

LEGEND

CONTROL POINT

No CONTROL POINT NUMBER

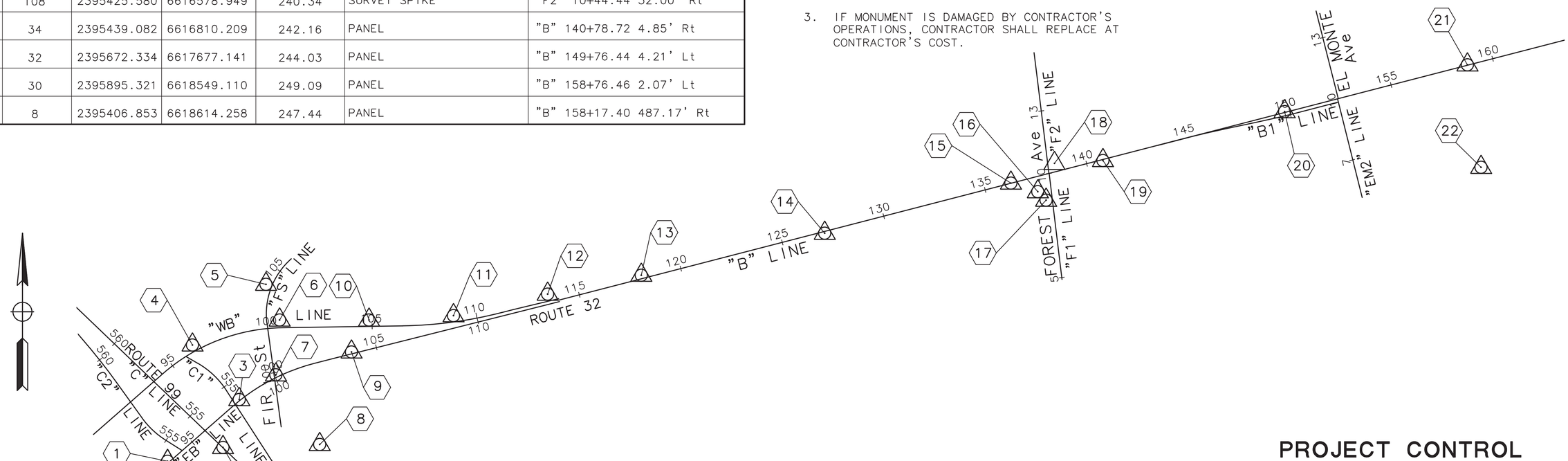

PROJECT CONTROL

NO SCALE

PC-1

Dist	COUNTY	ROUTE	POST MILES TOTAL PROJECT	SHEET No.	TOTAL SHEETS
03	But	32	10.1/10.5	11	126

11-6-15
REGISTERED CIVIL ENGINEER DATE

NOVEMBER 13, 2015
PLANS APPROVAL DATE

REGISTERED PROFESSIONAL ENGINEER — JAMES MARSHALL PANGBURN — No. 71445 — Exp. 12/31/15 — CIVIL — STATE OF CALIFORNIA

THE STATE OF CALIFORNIA OR ITS OFFICERS OR AGENTS SHALL NOT BE RESPONSIBLE FOR THE ACCURACY OR COMPLETENESS OF SCANNED COPIES OF THIS PLAN SHEET.

MARK THOMAS & CO., INC.
7300 FOLSOM BLVD STE 203
SACRAMENTO, CA 95826

CITY OF CHICO
CAPITAL PROJECT SERVICES
411 MAIN STREET
CHICO, CA 95927

REVISED BY	DATE REVISED
E. WEEKS	J. PANGBURN

CALCULATED–DESIGNED BY
CHECKED BY

CONSULTANT FUNCTIONAL SUPERVISOR: JAMES MARSHALL PANGBURN

STATE OF CALIFORNIA – DEPARTMENT OF TRANSPORTATION
Caltrans

LAST REVISION: DATE PLOTTED => $DATE; TIME PLOTTED => $TIME
00-00-00

PATH: V:\Chico-55-0131-SR32 Widening\CADD\Phase 2 - SR 99 to East of Park and Ride\Drawing\sr32_PC1 PLOT DATE: Nov 18, 2015-07:35:54am CAD USER: kfriedrich

BORDER LAST REVISED 7/2/2010 | USERNAME => $USER; DGN FILE => $REQUEST | RELATIVE BORDER SCALE IS IN INCHES 0 1 2 3 | UNIT 0000 | PROJECT NUMBER & PHASE 0313000246

NOTES:

1. FOR COMPLETE RIGHT OF WAY AND ACCURATE ACCESS DATA, SEE RIGHT OF WAY RECORD MAPS AT DISTRICT OFFICE.
2. ALL CURVE CALLOUTS TO CURB AND GUTTER ARE AT FLOWLINE UNLESS OTHERWISE NOTED.
3. FOR CURB RETURN, CURB RAMP, AND SAWCUT LOCATIONS AND DETAILS, SEE CONSTRUCTION DETAIL SHEETS.
4. CONTRACTOR SHALL COMPLY WITH BUSINESS AND PROFESSIONAL CODE SECTION 8771(b) REGARDING REFERENCING, PRESERVING, AND RECONSTRUCTING MONUMENTS, WHETHER OR NOT MONUMENTS ARE SHOWN IN THESE PLANS.
5. IF MONUMENT IS DAMAGED BY CONTRACTORS OPERATIONS, CONTRACTOR SHALL REPLACE AT CONTRACTOR'S COST.
6. SEE SHEETS C–12 FOR LIMITS OF PAVEMENT REHABILITATION.
7. SEE SHEETS L–3 TO L–4 FOR DEMOLITION INCLUDING COLD PLANE AC PAVEMENT.

ABBREVIATIONS

AP	ANGLE POINT
AFTS	ALTERNATIVE FLARED TERMINAL SYSTEM
C.O.C.	CITY OF CHICO
C&G	CURB AND GUTTER
HMA OD	HOT MIX ASPHALT OVERSIDE DRAIN
OD	OVERSIDE DRAIN
Saw	SAWCUT
SBTG	STEEL–BACKED TIMBER GUARDRAIL
Rem	REMOVE
CG&SW	CURB, GUTTER & SIDEWALK

LEGEND

- HMA OVERLAY LIMITS
- NEW STRUCTURAL SECTION
- COLD PLANE AC Pvmt (0.15' Max)
- MINOR Conc (STAMPED CONCRETE)
- Temp FENCE (TYPE ESA)
- X / X–X — Const DETAIL REFERENCE
- EXISTING SURVEY MONUMENT TO REMAIN

Dist	COUNTY	ROUTE	POST MILES TOTAL PROJECT	SHEET No.	TOTAL SHEETS
03	But	32	10.1/10.5	12	126

11–6–15
REGISTERED CIVIL ENGINEER DATE

NOVEMBER 13, 2015
PLANS APPROVAL DATE

JAMES MARSHALL PANGBURN No. 71445 Exp. 12/31/15 CIVIL — REGISTERED PROFESSIONAL ENGINEER — STATE OF CALIFORNIA

THE STATE OF CALIFORNIA OR ITS OFFICERS OR AGENTS SHALL NOT BE RESPONSIBLE FOR THE ACCURACY OR COMPLETENESS OF SCANNED COPIES OF THIS PLAN SHEET.

MARK THOMAS & CO., INC.
7300 FOLSOM BLVD STE 203
SACRAMENTO, CA 95826

CITY OF CHICO
CAPITAL PROJECT SERVICES
411 MAIN STREET
CHICO, CA 95927

CURVE TABLE				
CURVE	R	△	Tan	L
①	400.00	21°55'46"	77.50	153.10
②	3000.00	05°10'35"	135.61	271.03
③	1000.00	05°43'46"	50.04	100.00
④	400.00	27°18'05"	97.15	190.60
⑤	888.00	40°20'01"	326.14	625.11
⑥	350.00	56°27'27"	187.90	344.88
⑦	952.00	26°43'01"	226.07	443.92
⑧	908.00	09°19'09"	74.00	147.68

LAYOUT

SCALE:1" = 50'

L-1

THIS PLAN ACCURATE FOR LAYOUT ONLY

STATE OF CALIFORNIA – DEPARTMENT OF TRANSPORTATION — Caltrans®
CONSULTANT FUNCTIONAL SUPERVISOR: JAMES MARSHALL PANGBURN
CALCULATED–DESIGNED BY: E. WEEKS — CHECKED BY: J. PANGBURN
REVISED BY — DATE REVISED

PATH: V:\Chico-55-0131-SR32 Widening\CADD\Phase 2 - SR 99 to East\Plans\Roadway\Layout\Layout.dgn
PLOT DATE: Nov 18, 2015–07:37:47am
CAD USER: kfriedrich

LAST REVISION DATE PLOTTED => $DATE
00–00–00 TIME PLOTTED => $TIME

BORDER LAST REVISED 7/2/2010
USERNAME => $USER
DGN FILE => $REQUEST
RELATIVE BORDER SCALE IS IN INCHES 0 1 2 3
UNIT 0000
PROJECT NUMBER & PHASE 0313000246

Dist	COUNTY	ROUTE	POST MILES TOTAL PROJECT	SHEET No.	TOTAL SHEETS
03	But	32	10.1/10.5	13	126

11-6-15
REGISTERED CIVIL ENGINEER DATE

NOVEMBER 13, 2015
PLANS APPROVAL DATE

REGISTERED PROFESSIONAL ENGINEER
JAMES MARSHALL PANGBURN
No. 71445
Exp. 12/31/15
CIVIL
STATE OF CALIFORNIA

THE STATE OF CALIFORNIA OR ITS OFFICERS OR AGENTS SHALL NOT BE RESPONSIBLE FOR THE ACCURACY OR COMPLETENESS OF SCANNED COPIES OF THIS PLAN SHEET.

MARK THOMAS & CO., INC.
7300 FOLSOM BLVD STE 203
SACRAMENTO, CA 95826

CITY OF CHICO
CAPITAL PROJECT SERVICES
411 MAIN STREET
CHICO, CA 95927

NOTES:

1. FOR COMPLETE RIGHT OF WAY AND ACCURATE ACCESS DATA, SEE RIGHT OF WAY RECORD MAPS AT DISTRICT OFFICE.
2. FOR ADDITIONAL NOTES, LEGEND, AND ABBREVIATIONS, SEE SHEET L-1.

CURVE TABLE

CURVE	R	△	Tan	L
9	2012.00	13°37'00"	240.21	478.16
10	1920.00	14°36'30"	246.10	489.53

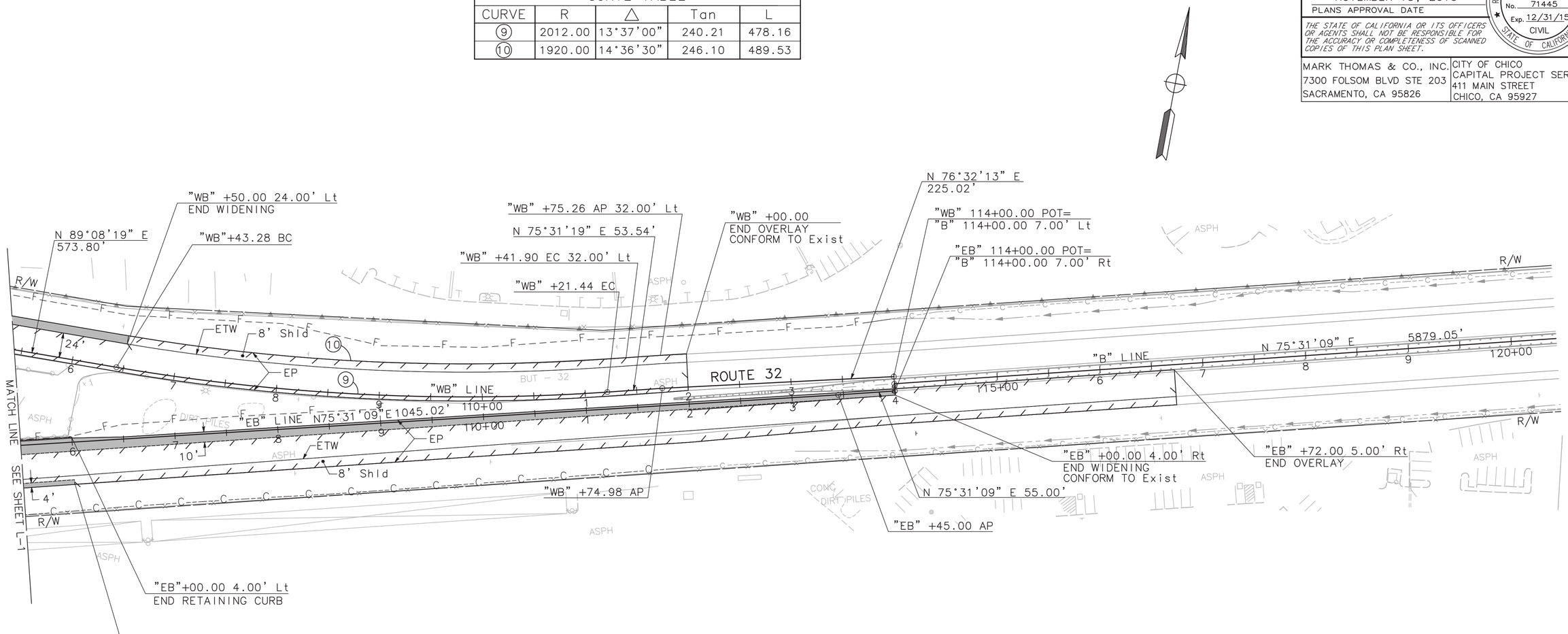

LAYOUT

SCALE: 1" = 50'

L-2

THIS PLAN ACCURATE FOR LAYOUT ONLY

STATE OF CALIFORNIA - DEPARTMENT OF TRANSPORTATION
Caltrans

CONSULTANT FUNCTIONAL SUPERVISOR: JAMES MARSHALL PANGBURN
CALCULATED-DESIGNED BY: E. WEEKS
CHECKED BY: J. PANGBURN
REVISED BY
DATE REVISED

PATH: V:\Chico-55-0131-SR32 Widening\CADD\Phase 2 - SR 99 to East Fork Mansfield Drawing\
PLOT DATE: Nov 18, 2015-07:38:26am
CAD USER: kfriedrich

LAST REVISION 00-00-00
DATE PLOTTED => $DATE
TIME PLOTTED => $TIME

BORDER LAST REVISED 7/2/2010
USERNAME => $USER
DGN FILE => $REQUEST
RELATIVE BORDER SCALE IS IN INCHES 0 1 2 3
UNIT 0000
PROJECT NUMBER & PHASE 0313000246

Dist	COUNTY	ROUTE	POST MILES TOTAL PROJECT	SHEET No.	TOTAL SHEETS
03	But	32	10.1/10.5	14	126

REGISTERED CIVIL ENGINEER — 11-6-15

PLANS APPROVAL DATE — NOVEMBER 13, 2015

JAMES MARSHALL PANGBURN No. 71445 Exp. 12/31/15 CIVIL — REGISTERED PROFESSIONAL ENGINEER — STATE OF CALIFORNIA

THE STATE OF CALIFORNIA OR ITS OFFICERS OR AGENTS SHALL NOT BE RESPONSIBLE FOR THE ACCURACY OR COMPLETENESS OF SCANNED COPIES OF THIS PLAN SHEET.

MARK THOMAS & CO., INC.
7300 FOLSOM BLVD STE 203
SACRAMENTO, CA 95826

CITY OF CHICO
CAPITAL PROJECT SERVICES
411 MAIN STREET
CHICO, CA 95927

NOTES:

1. FOR SAWCUT LOCATION INFORMATION NOT SHOWN, SEE CONSTRUCTION DETAIL SHEETS.
2. SEE SHEET X-7 FOR DEMOLITION PAYMENT LIMITS.

ABBREVIATIONS

AP	ANGLE POINT
C.O.C.	CITY OF CHICO
C&G	CURB AND GUTTER
HMA-O	HOT MIX ASPHALT, OGFC
HMA-A	HOT MIX ASPHALT, TYPE A
OGFC	OPEN GRADED FRICTION COURSE
Saw	SAWCUT
Rem	REMOVE
C&SW	CURB & SIDEWALK

LEGEND

- NEW STRUCTURAL SECTION
- COLD PLANE AC Pvmt (0.15' Max)
- OBLITERATE SURFACING
- REMOVE CONCRETE
- COLD PLANE Exist RHMA-O (0.10' Max) COLD PLANE AC Pvmt (0.15' Max)
- COLD PLANE Exist RHMA-O (0.10' Max)

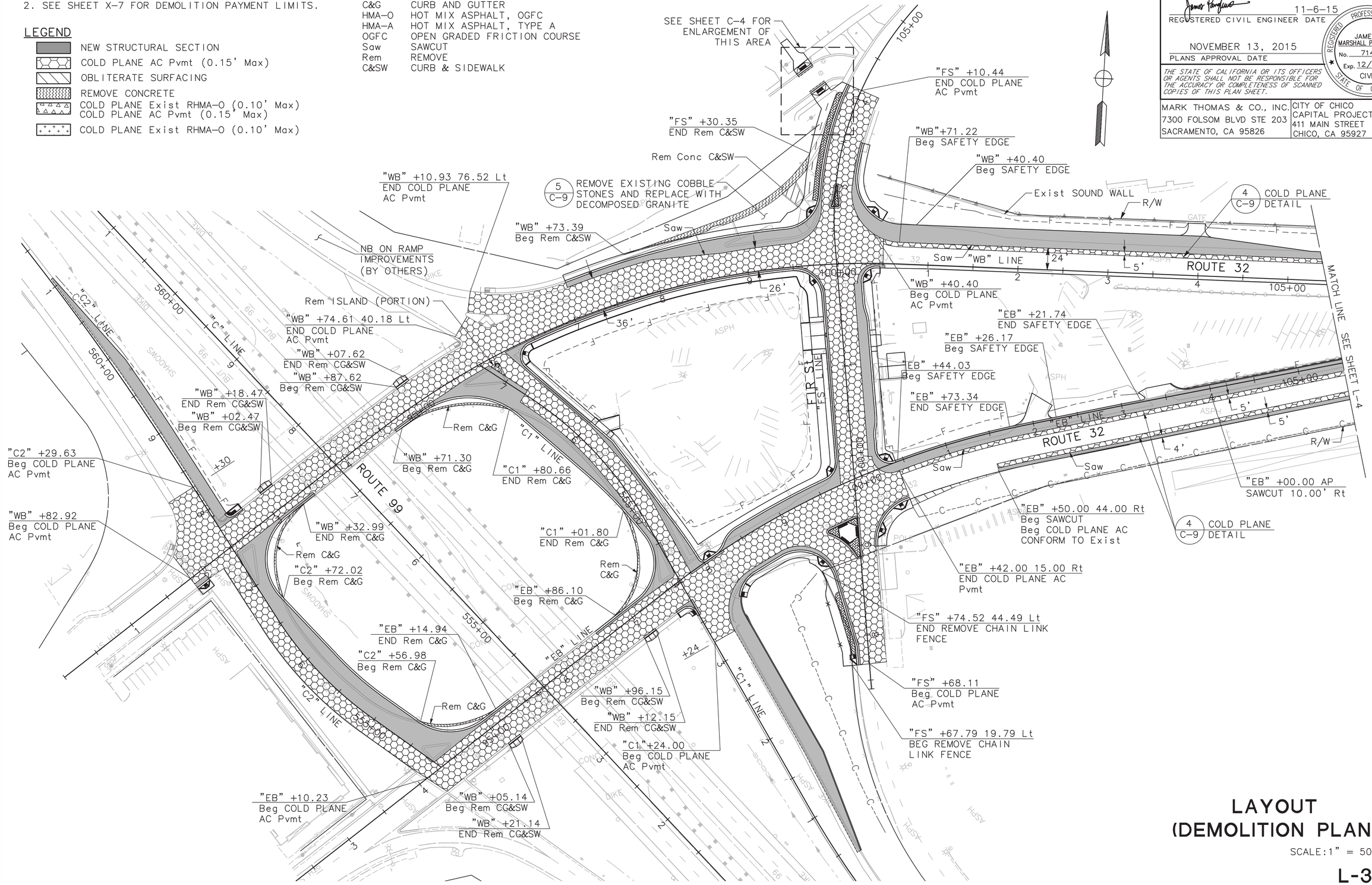

LAYOUT (DEMOLITION PLAN)

SCALE:1" = 50'

L-3

THIS PLAN ACCURATE FOR LAYOUT ONLY

STATE OF CALIFORNIA – DEPARTMENT OF TRANSPORTATION — Caltrans

CONSULTANT FUNCTIONAL SUPERVISOR: JAMES MARSHALL PANGBURN

CALCULATED-DESIGNED BY: E. WEEKS — CHECKED BY: J. PANGBURN

REVISED BY — DATE REVISED

PATH: V:\Chico-55-0131-SR32 Widening\CADD\Phase 2 - SR 99 to East\Final Design\Roadway\Sheet\0-Drawing\ PLOT DATE: Nov 18, 2015-07:40:15am CAD USER: kfriedrich

LAST REVISION 00-00-00 — DATE PLOTTED => $DATE — TIME PLOTTED => $TIME

BORDER LAST REVISED 7/2/2010 | USERNAME => $USER | DGN FILE => $REQUEST | RELATIVE BORDER SCALE IS IN INCHES 0 1 2 3 | UNIT 0000 | PROJECT NUMBER & PHASE 0313000246

Dist	COUNTY	ROUTE	POST MILES TOTAL PROJECT	SHEET No.	TOTAL SHEETS
03	But	32	10.1/10.5	15	126

11-6-15
REGISTERED CIVIL ENGINEER DATE

NOVEMBER 13, 2015
PLANS APPROVAL DATE

REGISTERED PROFESSIONAL ENGINEER
JAMES MARSHALL PANGBURN
No. 71445
Exp. 12/31/15
CIVIL
STATE OF CALIFORNIA

THE STATE OF CALIFORNIA OR ITS OFFICERS OR AGENTS SHALL NOT BE RESPONSIBLE FOR THE ACCURACY OR COMPLETENESS OF SCANNED COPIES OF THIS PLAN SHEET.

MARK THOMAS & CO., INC.
7300 FOLSOM BLVD STE 203
SACRAMENTO, CA 95826

CITY OF CHICO
CAPITAL PROJECT SERVICES
411 MAIN STREET
CHICO, CA 95927

NOTES:

1. FOR ADDITIONAL NOTES, LEGEND, AND ABBREVIATIONS, SEE SHEET L-3.

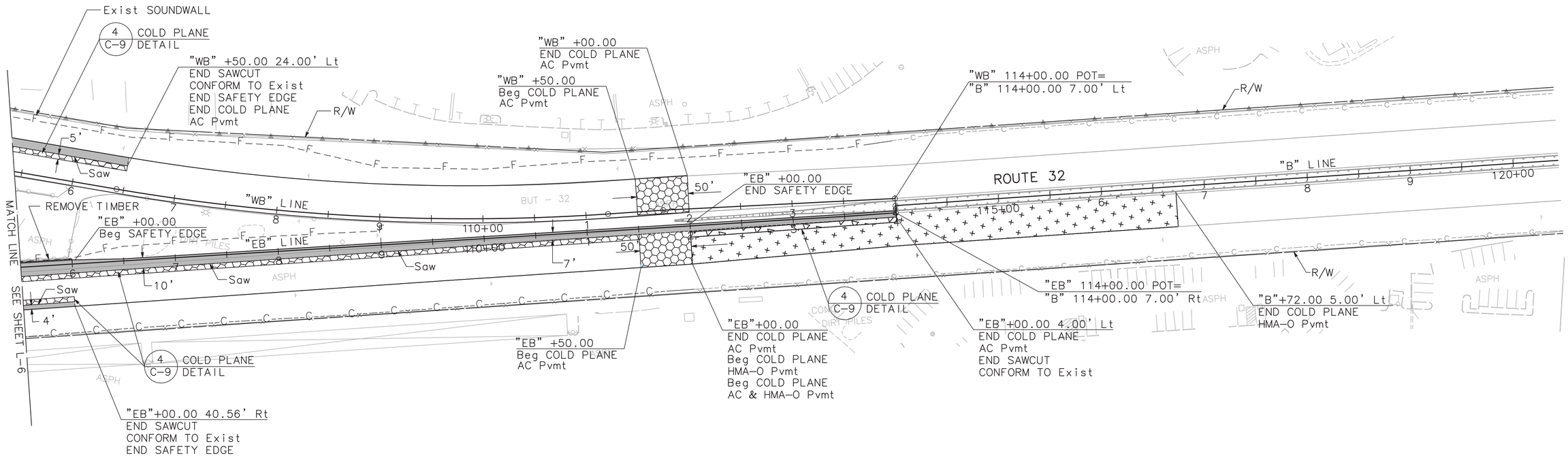

LAYOUT (DEMOLITION PLAN)

SCALE: 1" = 50'

L-4

THIS PLAN ACCURATE FOR LAYOUT ONLY

STATE OF CALIFORNIA - DEPARTMENT OF TRANSPORTATION
Caltrans

CONSULTANT FUNCTIONAL SUPERVISOR: JAMES MARSHALL PANGBURN
CALCULATED-DESIGNED BY: E. WEEKS
CHECKED BY: J. PANGBURN
REVISED BY
DATE REVISED

PATH: V:\Chico-55-0131-SR32 Widening\CADD\Phase 2 - SR 99 to East Fork Mansfield Drawing\ PLOT DATE: Nov 18, 2015-07:41:01am CAD USER: kfriedrich

LAST REVISION 00-00-00
DATE PLOTTED => $DATE
TIME PLOTTED => $TIME

BORDER LAST REVISED 7/2/2010
USERNAME => $USER
DGN FILE => $REQUEST
RELATIVE BORDER SCALE IS IN INCHES 0 1 2 3
UNIT 0000
PROJECT NUMBER & PHASE 0313000246

Dist	COUNTY	ROUTE	POST MILES TOTAL PROJECT	SHEET No.	TOTAL SHEETS
03	But	32	10.1/10.5	16	126

11-6-15
REGISTERED CIVIL ENGINEER DATE

NOVEMBER 13, 2015
PLANS APPROVAL DATE

JAMES MARSHALL PANGBURN
No. 71445
Exp. 12/31/15
CIVIL
REGISTERED PROFESSIONAL ENGINEER
STATE OF CALIFORNIA

THE STATE OF CALIFORNIA OR ITS OFFICERS OR AGENTS SHALL NOT BE RESPONSIBLE FOR THE ACCURACY OR COMPLETENESS OF SCANNED COPIES OF THIS PLAN SHEET.

MARK THOMAS & CO., INC.
7300 FOLSOM BLVD STE 203
SACRAMENTO, CA 95826

CITY OF CHICO
CAPITAL PROJECT SERVICES
411 MAIN STREET
CHICO, CA 95927

NOTE:

1. ELEVATIONS BASED ON NAVD 88.

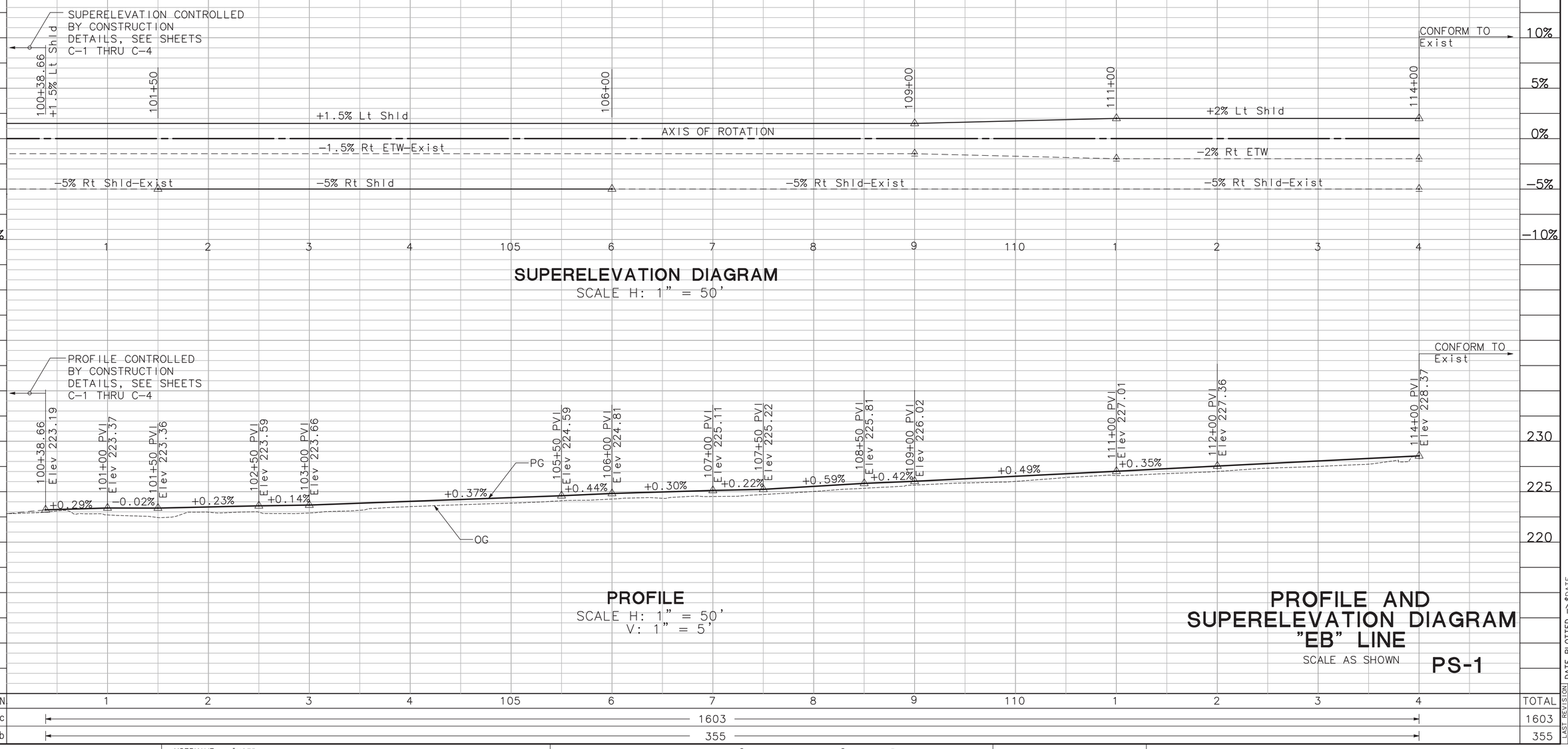

SUPERELEVATION DIAGRAM
SCALE H: 1" = 50'

PROFILE
SCALE H: 1" = 50'
V: 1" = 5'

STATION	1	2	3	4	105	6	7	8	9	110	1	2	3	4	TOTAL
CY Exc															1603
CY Emb															355

PROFILE AND SUPERELEVATION DIAGRAM "EB" LINE
SCALE AS SHOWN

PS-1

STATE OF CALIFORNIA - DEPARTMENT OF TRANSPORTATION
CONSULTANT FUNCTIONAL SUPERVISOR: JAMES MARSHALL PANGBURN
CALCULATED-DESIGNED BY: E. WEEKS
CHECKED BY: J. PANGBURN
REVISED BY
DATE REVISED
LAST REVISION DATE PLOTTED => $DATE
TIME PLOTTED => $TIME
00-00-00

PATH: V:\Chico-55-0131-SR32 Widening\CADD\Phase 2 - SR 99 to East of Park and Ride\Drawing\sr32_PS1 PLOT DATE: Nov 18, 2015-07:42:52am CAD USER: kfriedrich

BORDER LAST REVISED 7/2/2010
USERNAME => $USER
DGN FILE => $REQUEST
RELATIVE BORDER SCALE IS IN INCHES 0 1 2 3
UNIT 0000
PROJECT NUMBER & PHASE 0313000246

NOTE: SAWCUT ELEVATIONS ARE AT TOP OF DENSE GRADED ASPHALT CONCRETE

NON-STANDARD ABBREVIATIONS:

CR	CURB RAMP
HMA OD	HOT MIX ASPHALT OVERSIDE DRAIN
OD	OVERSIDE DRAIN

Dist	COUNTY	ROUTE	POST MILES TOTAL PROJECT	SHEET No.	TOTAL SHEETS
03	But	32	10.1/10.5	17	126

11-6-15
REGISTERED CIVIL ENGINEER DATE

NOVEMBER 13, 2015
PLANS APPROVAL DATE

JAMES MARSHALL PANGBURN No. 71445 Exp. 12/31/15 CIVIL — REGISTERED PROFESSIONAL ENGINEER — STATE OF CALIFORNIA

THE STATE OF CALIFORNIA OR ITS OFFICERS OR AGENTS SHALL NOT BE RESPONSIBLE FOR THE ACCURACY OR COMPLETENESS OF SCANNED COPIES OF THIS PLAN SHEET.

MARK THOMAS & CO., INC.
7300 FOLSOM BLVD STE 203
SACRAMENTO, CA 95826

CITY OF CHICO
CAPITAL PROJECT SERVICES
411 MAIN STREET
CHICO, CA 95927

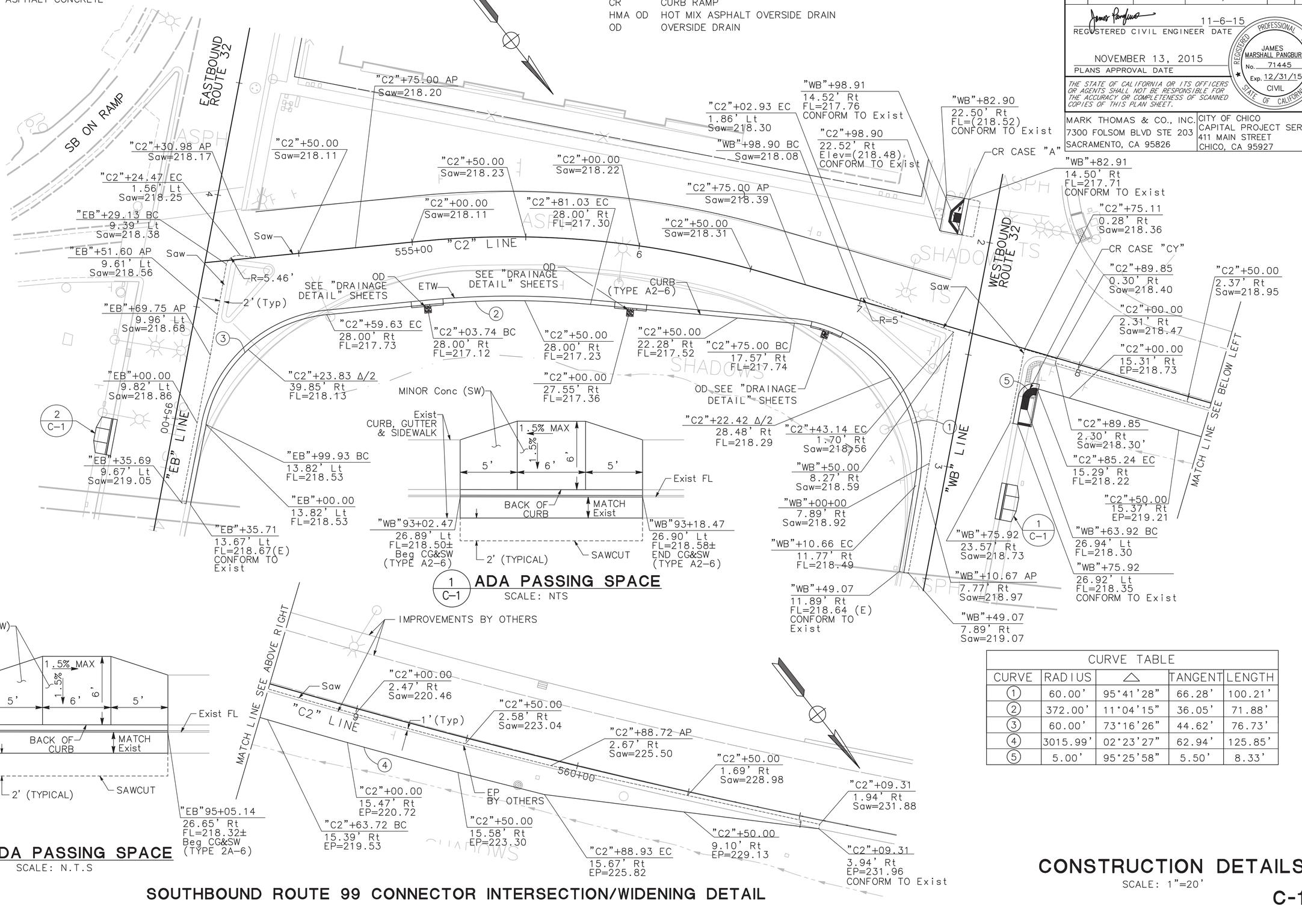

CURVE TABLE				
CURVE	RADIUS	△	TANGENT	LENGTH
①	60.00'	95°41'28"	66.28'	100.21'
②	372.00'	11°04'15"	36.05'	71.88'
③	60.00'	73°16'26"	44.62'	76.73'
④	3015.99'	02°23'27"	62.94'	125.85'
⑤	5.00'	95°25'58"	5.50'	8.33'

SOUTHBOUND ROUTE 99 CONNECTOR INTERSECTION/WIDENING DETAIL

CONSTRUCTION DETAILS

SCALE: 1"=20'

C-1

STATE OF CALIFORNIA – DEPARTMENT OF TRANSPORTATION
CONSULTANT FUNCTIONAL SUPERVISOR: JAMES MARSHALL PANGBURN
CALCULATED-DESIGNED BY: E. WEEKS
CHECKED BY: J. PANGBURN
REVISED BY
DATE REVISED

LAST REVISION DATE PLOTTED => $DATE
TIME PLOTTED => $TIME
00-00-00

PATH: V:\Chico-55-0131-SR32 Widening\CADD\Phase 2 - SR 99 to East of Park and Ride\Drawing\sr32_C1-C7 PLOT DATE: Nov 18, 2015-07:44:51am CAD USER: kfriedrich

BORDER LAST REVISED 7/2/2010
USERNAME => $USER
DGN FILE => $REQUEST
RELATIVE BORDER SCALE IS IN INCHES 0 1 2 3
UNIT 0000
PROJECT NUMBER & PHASE 0313000246

Dist	COUNTY	ROUTE	POST MILES TOTAL PROJECT	SHEET No.	TOTAL SHEETS
03	But	32	10.1/10.5	18	126

REGISTERED CIVIL ENGINEER — 11-6-15

PLANS APPROVAL DATE — NOVEMBER 13, 2015

JAMES MARSHALL PANGBURN No. 71445 Exp. 12/31/15 CIVIL — REGISTERED PROFESSIONAL ENGINEER — STATE OF CALIFORNIA

THE STATE OF CALIFORNIA OR ITS OFFICERS OR AGENTS SHALL NOT BE RESPONSIBLE FOR THE ACCURACY OR COMPLETENESS OF SCANNED COPIES OF THIS PLAN SHEET.

MARK THOMAS & CO., INC.
7300 FOLSOM BLVD STE 203
SACRAMENTO, CA 95826

CITY OF CHICO
CAPITAL PROJECT SERVICES
411 MAIN STREET
CHICO, CA 95927

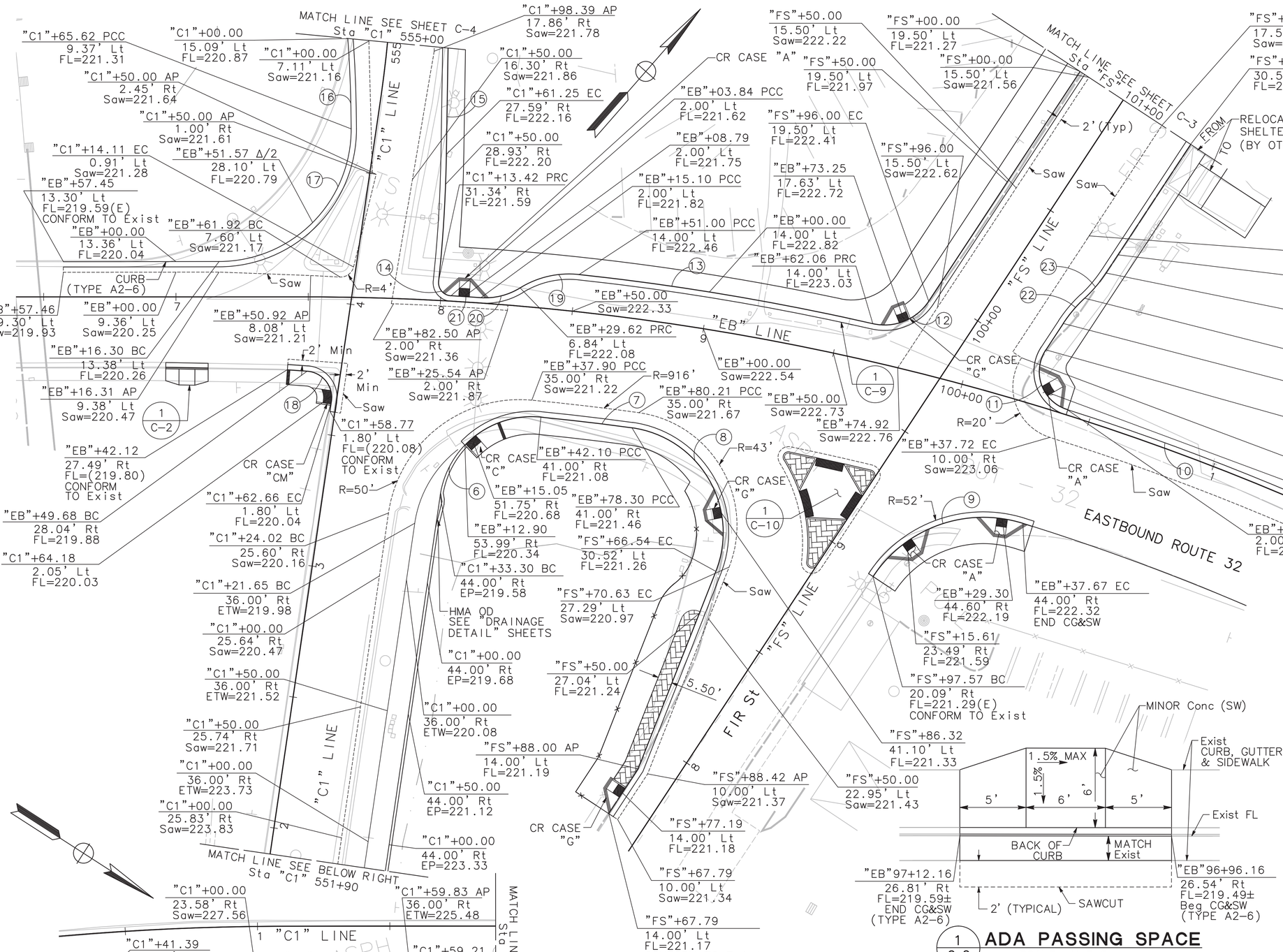

CURVE TABLE				
CURVE	RADIUS	△	TANGENT	LENGTH
⑥	35.00'	87°17'50"	33.39'	53.33'
⑦	911.00'	02°10'42"	17.32'	34.63'
⑧	40.00'	103°41'39"	50.92'	72.39'
⑨	50.00'	73°54'37"	37.62'	64.50'
⑩	954.00'	09°15'33"	77.25'	154.17'
⑪	15.00'	105°47'52"	19.83'	27.70'
⑫	20.00'	69°28'09"	13.87'	24.25'
⑬	966.00'	06°41'02"	56.41'	112.69'
⑭	5.00'	92°45'10"	5.25'	8.09'
⑮	532.00'	05°10'18"	24.03'	48.02'
⑯	496.00'	11°00'17"	47.78'	95.27'
⑰	50.00'	90°04'06"	50.06'	78.60
⑱	10.00'	94°08'06"	10.75'	16.43'
⑲	35.00'	37°57'50"	12.04'	23.19'
⑳	25.00'	35°48'11"	8.08'	15.62'
㉑	954.00'	01°02'12"	8.63'	17.26'
㉒	52.00'	13°47'43"	6.29'	12.52'
㉓	52.00'	13°47'43"	6.29'	12.52'
㉔	20.00'	31°24'49"	5.62'	10.97'
㉕	20.00'	30°24'41"	5.44'	10.62'

NORTHBOUND ROUTE 99 CONNECTOR & FIR INTERSECTION/WIDENING DETAIL

CONSTRUCTION DETAILS

SCALE: 1"=20'

C-2

STATE OF CALIFORNIA – DEPARTMENT OF TRANSPORTATION
CONSULTANT FUNCTIONAL SUPERVISOR: JAMES MARSHALL PANGBURN
CALCULATED–DESIGNED BY: E. WEEKS
CHECKED BY: J. PANGBURN
REVISED BY
DATE REVISED

PATH: V:\Chico-55-0131-SR32 Widening\CADD\Phase 2 - SR 99 to East of Park and Ride\Drawing\sr32_C1-C7 PLOT DATE: Nov 18, 2015-07:45:41am CAD USER: kfriedrich

LAST REVISION DATE PLOTTED => $DATE
00-00-00 TIME PLOTTED => $TIME

BORDER LAST REVISED 7/2/2010 | USERNAME => $USER | DGN FILE => $REQUEST | RELATIVE BORDER SCALE IS IN INCHES 0 1 2 3 | UNIT 0000 | PROJECT NUMBER & PHASE 0313000246

Dist	COUNTY	ROUTE	POST MILES TOTAL PROJECT	SHEET No.	TOTAL SHEETS
03	But	32	10.1/10.5	19	126

11-6-15
REGISTERED CIVIL ENGINEER DATE

NOVEMBER 13, 2015
PLANS APPROVAL DATE

JAMES MARSHALL PANGBURN No. 71445 Exp. 12/31/15 CIVIL — REGISTERED PROFESSIONAL ENGINEER — STATE OF CALIFORNIA

THE STATE OF CALIFORNIA OR ITS OFFICERS OR AGENTS SHALL NOT BE RESPONSIBLE FOR THE ACCURACY OR COMPLETENESS OF SCANNED COPIES OF THIS PLAN SHEET.

MARK THOMAS & CO., INC.
7300 FOLSOM BLVD STE 203
SACRAMENTO, CA 95826

CITY OF CHICO
CAPITAL PROJECT SERVICES
411 MAIN STREET
CHICO, CA 95927

CURVE TABLE				
CURVE	RADIUS	△	TANGENT	LENGTH
(27)	15.00'	95°40'02"	16.56'	25.05'
(28)	30.00'	90°50'40"	30.45'	47.57'
(29)	40.00'	80°11'01"	33.67'	55.98'
(30)	50.00'	96°49'40"	56.34'	84.50'
(31)	327.25'	05°41'59"	16.29'	32.55'
(32)	368.25'	17°30'00"	56.68'	112.48'
(33)	902.00'	15°45'19"	124.80'	248.03'
(34)	225.00'	01°23'51"	2.74'	5.49'
(35)	52.00'	13°47'43"	6.29'	12.52'
(36)	52.00'	13°47'43"	6.29'	12.52'
(37)	861.33'	06°55'04"	52.09'	104.06'
(38)	745.00'	07°39'10"	49.83'	99.51'
(39)	884.00'	05°38'18"	43.53'	86.99'

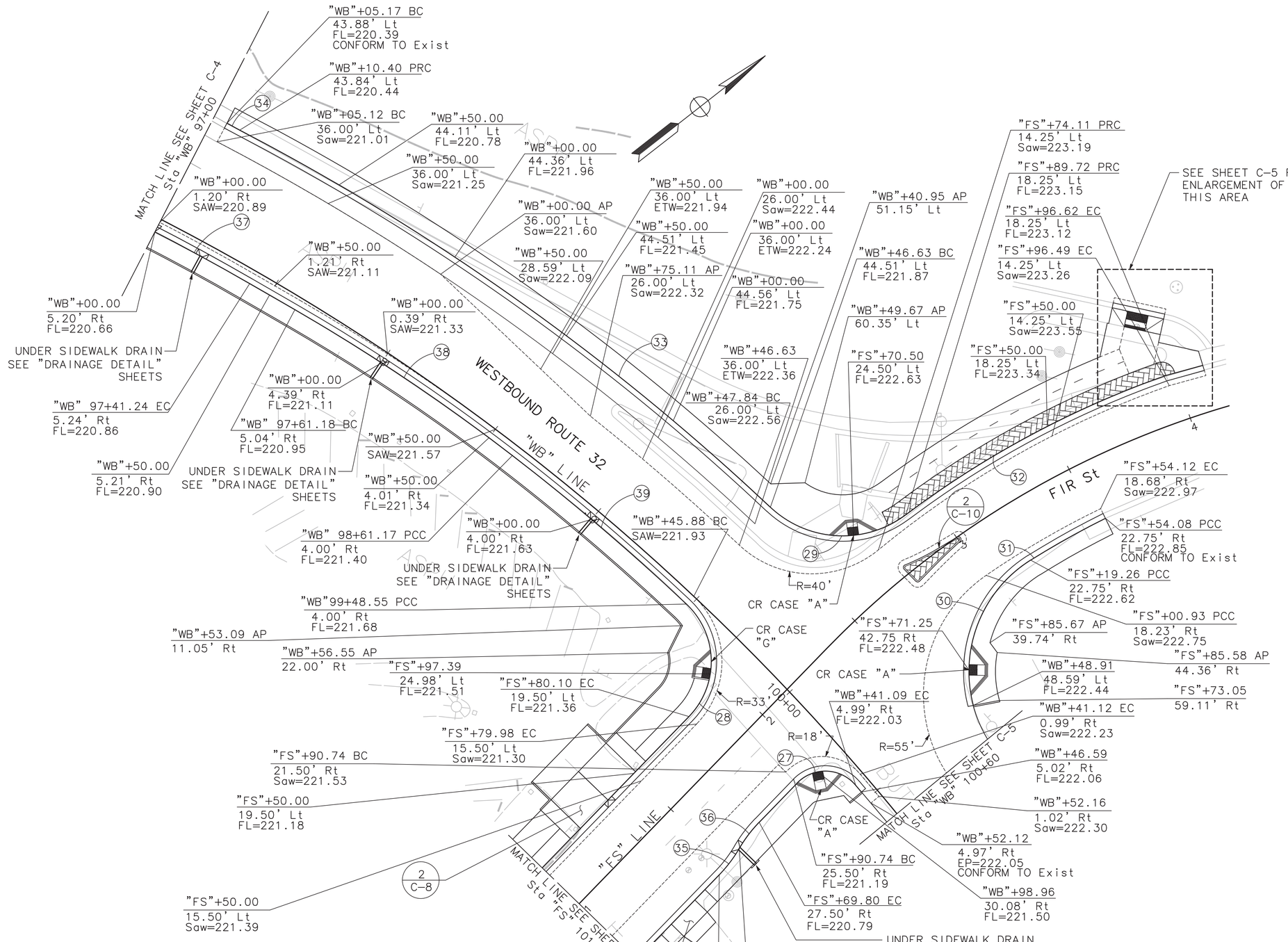

CONSTRUCTION DETAILS

SCALE: 1"=20'

C-3

NORTHBOUND ROUTE 99 CONNECTOR & FIR INTERSECTION/WIDENING DETAIL

STATE OF CALIFORNIA – DEPARTMENT OF TRANSPORTATION — Caltrans®
CONSULTANT FUNCTIONAL SUPERVISOR: JAMES MARSHALL PANGBURN
CALCULATED–DESIGNED BY: E. WEEKS
CHECKED BY: J. PANGBURN
REVISED BY | DATE REVISED

LAST REVISION DATE PLOTTED => $DATE
00-00-00 TIME PLOTTED => $TIME

PATH: V:\Chico-55-0131-SR32 widening\CADD\Phase 2 - SR 99 to East of Park and Ride\Drawing\sr32_C1-C7 PLOT DATE: Nov 18, 2015-07:46:19am CAD USER: kfriedrich

BORDER LAST REVISED 7/2/2010 | USERNAME => $USER | DGN FILE => $REQUEST | RELATIVE BORDER SCALE IS IN INCHES 0 1 2 3 | UNIT 0000 | PROJECT NUMBER & PHASE 0313000246

Dist	COUNTY	ROUTE	POST MILES TOTAL PROJECT	SHEET No.	TOTAL SHEETS
03	But	32	10.1/10.5	20	126

11-6-15
REGISTERED CIVIL ENGINEER DATE

NOVEMBER 13, 2015
PLANS APPROVAL DATE

REGISTERED PROFESSIONAL ENGINEER
JAMES MARSHALL PANGBURN
No. 71445
Exp. 12/31/15
CIVIL
STATE OF CALIFORNIA

THE STATE OF CALIFORNIA OR ITS OFFICERS OR AGENTS SHALL NOT BE RESPONSIBLE FOR THE ACCURACY OR COMPLETENESS OF SCANNED COPIES OF THIS PLAN SHEET.

MARK THOMAS & CO., INC.
7300 FOLSOM BLVD STE 203
SACRAMENTO, CA 95826

CITY OF CHICO
CAPITAL PROJECT SERVICES
411 MAIN STREET
CHICO, CA 95927

CURVE TABLE				
CURVE	RADIUS	△	TANGENT	LENGTH
(24)	496.00'	11°00'17"	47.78'	95.27'
(25)	86.00	75°22'26"	66.44'	113.13'
(26)	15.00'	113°58'03"	23.08'	29.84'

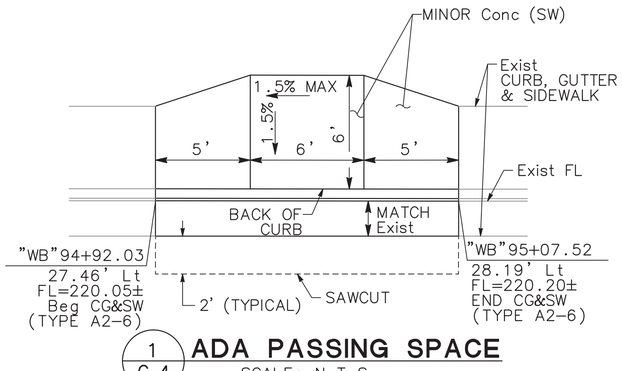

1 / C-4 **ADA PASSING SPACE**
SCALE: N.T.S

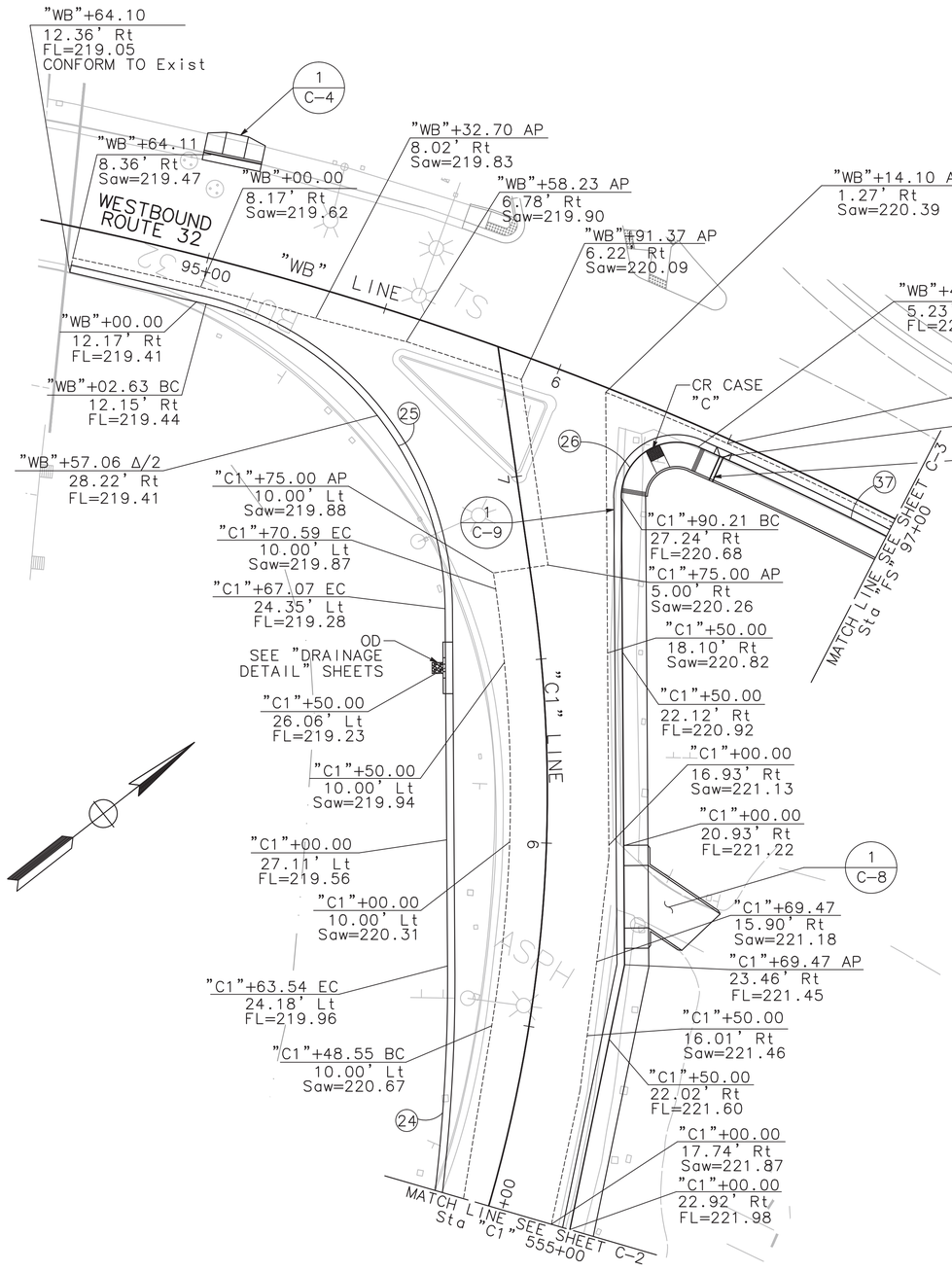

CONSTRUCTION DETAILS

SCALE: 1"=20'

C-4

NORTHBOUND ROUTE 99 CONNECTOR & FIR INTERSECTION/WIDENING DETAIL

STATE OF CALIFORNIA - DEPARTMENT OF TRANSPORTATION
Caltrans

CONSULTANT FUNCTIONAL SUPERVISOR	CALCULATED-DESIGNED BY	CHECKED BY	REVISED BY	DATE REVISED
JAMES MARSHALL PANGBURN	E. WEEKS	J. PANGBURN		

LAST REVISION DATE PLOTTED => $DATE
00-00-00 TIME PLOTTED => $TIME

BORDER LAST REVISED 7/2/2010 | USERNAME => $USER | DGN FILE => $REQUEST | RELATIVE BORDER SCALE IS IN INCHES 0 1 2 3 | UNIT 0000 | PROJECT NUMBER & PHASE 0313000246

PATH: V:\Chico-55-0131-SR32 Widening\CADD\Phase 2 - SR 99 to East of Park and Ride\Drawing\sr32_C1-C7 PLOT DATE: Nov 18, 2015-07:47:11am CAD USER: kfriedrich

NOTE: ALL CALLOUTS REFERENCE "FS" LINE UNLESS OTHERWISE NOTED.

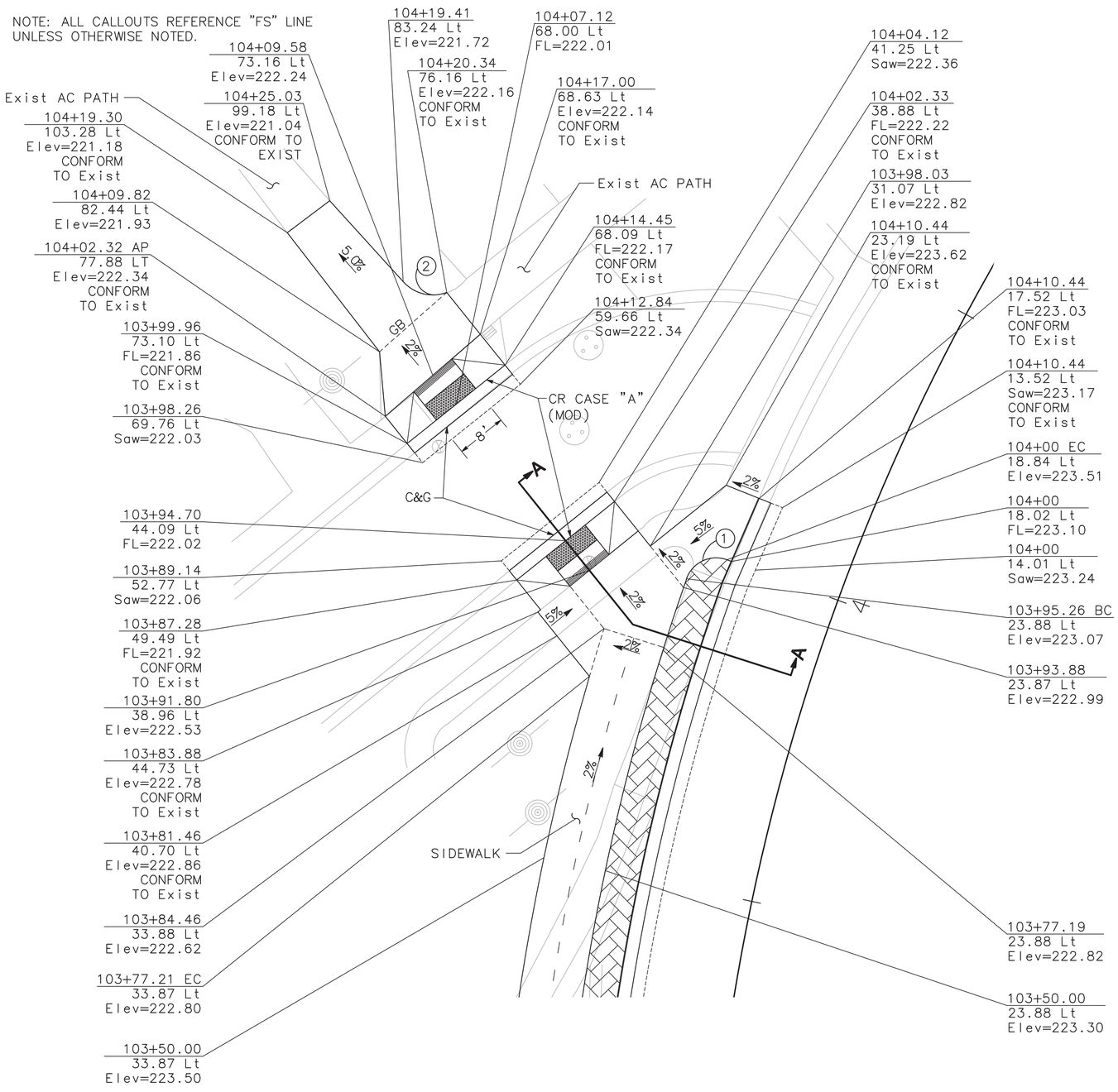

FIR STREET BIKE PATH DETAIL

CURVE TABLE				
CURVE	RADIUS	△	TANGENT	LENGTH
1	5.00	90°46'36"	5.07	7.92
2	6.25	70°06'14"	4.38	7.64

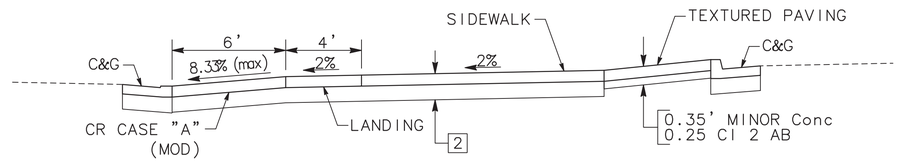

SECTION A-A
NO SCALE

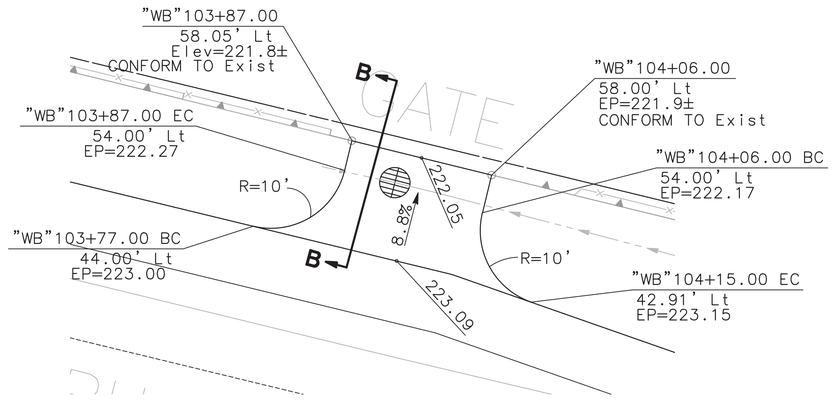

2 / C-5 DRIVEWAY DETAIL
"EB"103+74
SCALE: 1"=10'

SECTION B-B

CONSTRUCTION DETAILS
SCALE: 1"=20'

C-5

Dist	COUNTY	ROUTE	POST MILES TOTAL PROJECT	SHEET No.	TOTAL SHEETS
03	But	32	10.1/10.5	21	126

11-6-15
REGISTERED CIVIL ENGINEER DATE

NOVEMBER 13, 2015
PLANS APPROVAL DATE

REGISTERED PROFESSIONAL ENGINEER
JAMES MARSHALL PANGBURN
No. 71445
Exp. 12/31/15
CIVIL
STATE OF CALIFORNIA

THE STATE OF CALIFORNIA OR ITS OFFICERS OR AGENTS SHALL NOT BE RESPONSIBLE FOR THE ACCURACY OR COMPLETENESS OF SCANNED COPIES OF THIS PLAN SHEET.

MARK THOMAS & CO., INC.
7300 FOLSOM BLVD STE 203
SACRAMENTO, CA 95826

CITY OF CHICO
CAPITAL PROJECT SERVICES
411 MAIN STREET
CHICO, CA 95927

REVISED BY | DATE REVISED
E. WEEKS | J. PANGBURN
CALCULATED-DESIGNED BY | CHECKED BY
CONSULTANT FUNCTIONAL SUPERVISOR: JAMES MARSHALL PANGBURN
STATE OF CALIFORNIA - DEPARTMENT OF TRANSPORTATION
Caltrans

LAST REVISION | DATE PLOTTED => $DATE
00-00-00 | TIME PLOTTED => $TIME

PATH: V:\Chico-55-0131-SR32 Widening\CADD\Phase 2 - SR 99 to East of Park and Ride\Drawing\sr32_C1-C7 PLOT DATE: Nov 18, 2015-07:47:57am CAD USER: kfriedrich

BORDER LAST REVISED 7/2/2010
USERNAME => $USER
DGN FILE => $REQUEST
RELATIVE BORDER SCALE IS IN INCHES 0 1 2 3
UNIT 0000
PROJECT NUMBER & PHASE 0313000246

Dist	COUNTY	ROUTE	POST MILES TOTAL PROJECT	SHEET No.	TOTAL SHEETS
03	But	32	10.1/10.5	22	126

11-6-15
REGISTERED CIVIL ENGINEER DATE

NOVEMBER 13, 2015
PLANS APPROVAL DATE

REGISTERED PROFESSIONAL ENGINEER
JAMES MARSHALL PANGBURN
No. 71445
Exp. 12/31/15
CIVIL
STATE OF CALIFORNIA

THE STATE OF CALIFORNIA OR ITS OFFICERS OR AGENTS SHALL NOT BE RESPONSIBLE FOR THE ACCURACY OR COMPLETENESS OF SCANNED COPIES OF THIS PLAN SHEET.

MARK THOMAS & CO., INC.
7300 FOLSOM BLVD STE 203
SACRAMENTO, CA 95826

CITY OF CHICO
CAPITAL PROJECT SERVICES
411 MAIN STREET
CHICO, CA 95927

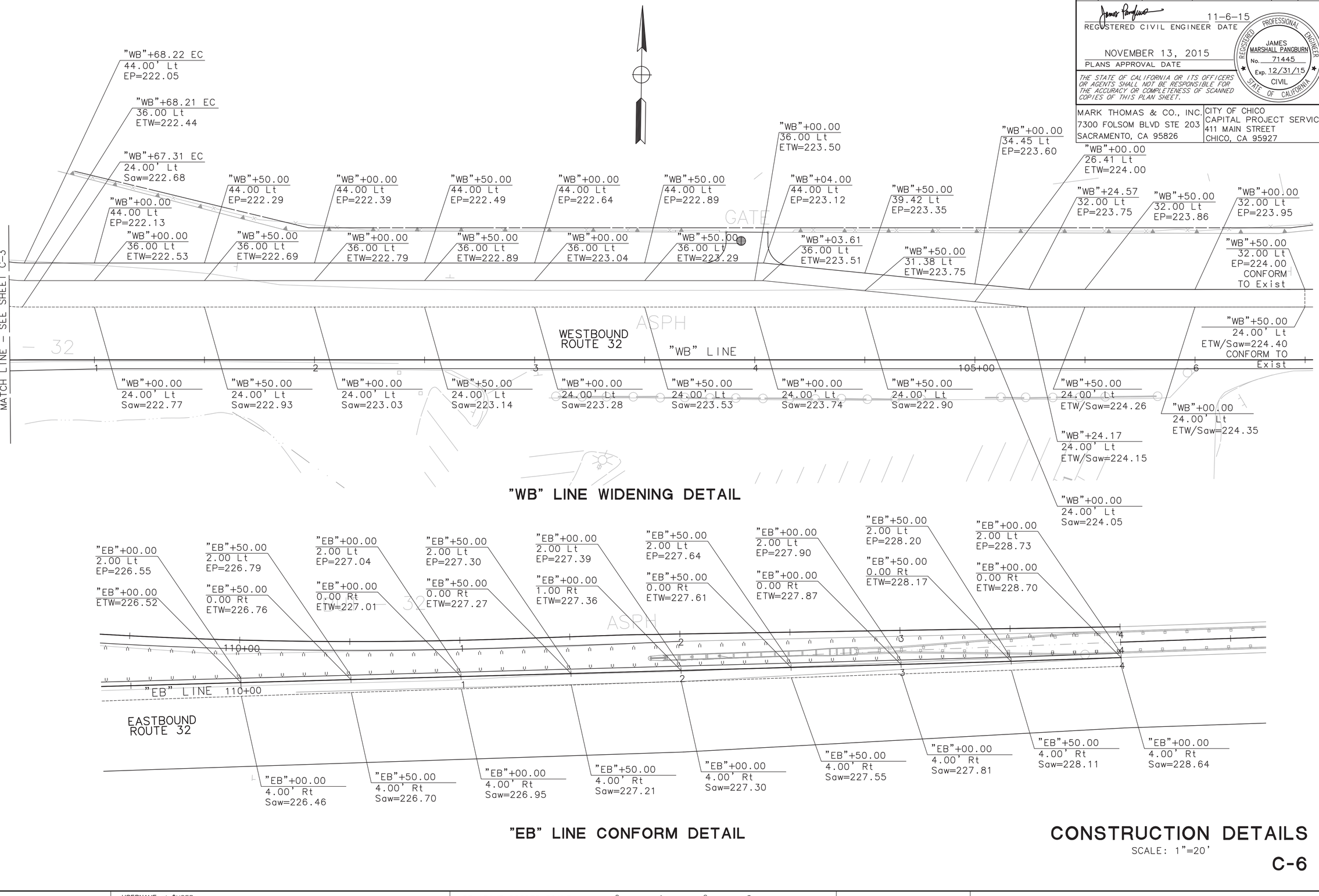

"WB" LINE WIDENING DETAIL

"EB" LINE CONFORM DETAIL

CONSTRUCTION DETAILS

SCALE: 1"=20'

C-6

STATE OF CALIFORNIA - DEPARTMENT OF TRANSPORTATION
CONSULTANT FUNCTIONAL SUPERVISOR: JAMES MARSHALL PANGBURN
CALCULATED-DESIGNED BY: E. WEEKS
CHECKED BY: J. PANGBURN
REVISED BY
DATE REVISED

LAST REVISION DATE PLOTTED => $DATE
00-00-00 TIME PLOTTED => $TIME

PATH: V:\Chico-55-0131-SR32 Widening\CADD\Phase 2 - SR 99 to East of Park and Ride\Drawings\sr32_C1-C7 PLOT DATE: Nov 18, 2015-07:48:51am CAD USER: kfriedrich

BORDER LAST REVISED 7/2/2010
USERNAME => $USER
DGN FILE => $REQUEST
RELATIVE BORDER SCALE IS IN INCHES 0 1 2 3
UNIT 0000
PROJECT NUMBER & PHASE 0313000246

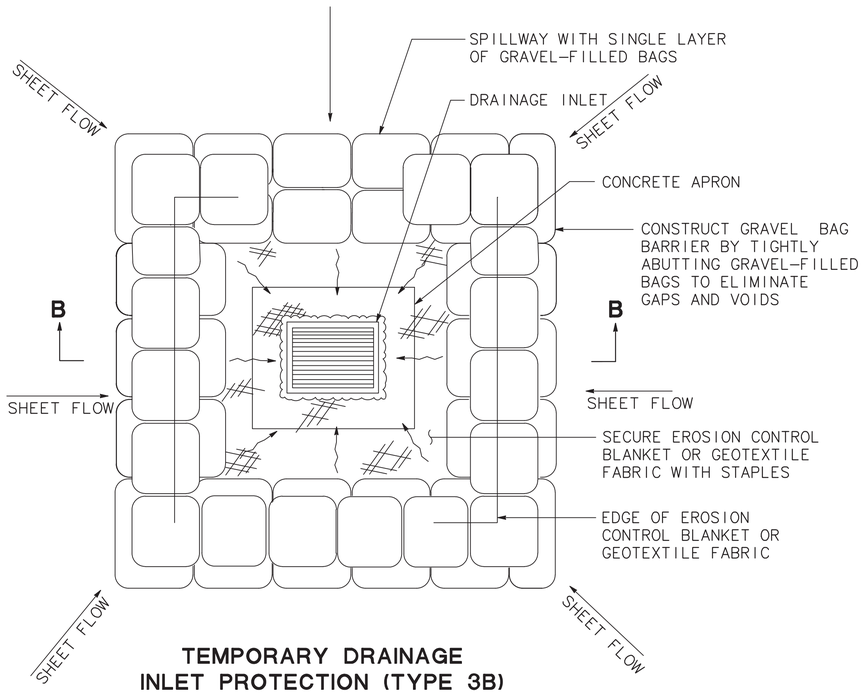

TEMPORARY DRAINAGE INLET PROTECTION (TYPE 3B) (GRAVEL BAG BARRIER)

NO SCALE

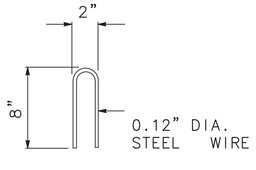

STAPLE DETAIL

NO SCALE

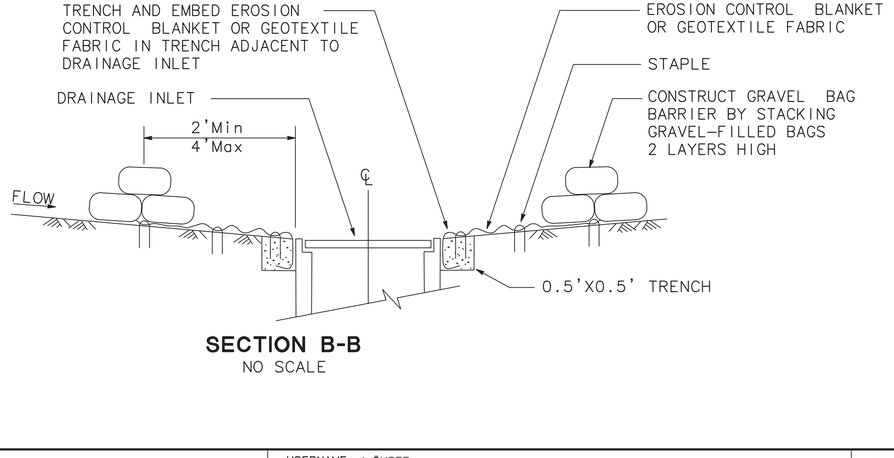

SECTION B-B

NO SCALE

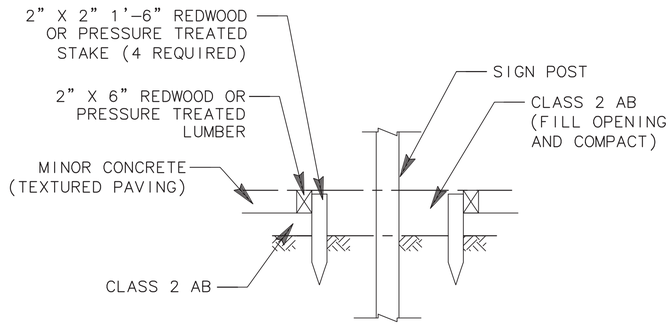

SECTION

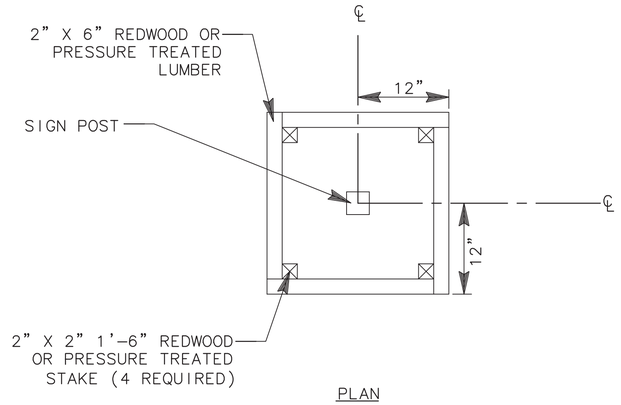

PLAN

OPENING FOR SIGN POST IN MINOR CONCRETE (TEXTURED PAVING)

NO SCALE

Dist	COUNTY	ROUTE	POST MILES TOTAL PROJECT	SHEET No.	TOTAL SHEETS
03	But	32	10.1/10.5	23	126

11-6-15
REGISTERED CIVIL ENGINEER DATE

NOVEMBER 13, 2015
PLANS APPROVAL DATE

REGISTERED PROFESSIONAL ENGINEER — JAMES MARSHALL PANGBURN — No. 71445 — Exp. 12/31/15 — CIVIL — STATE OF CALIFORNIA

THE STATE OF CALIFORNIA OR ITS OFFICERS OR AGENTS SHALL NOT BE RESPONSIBLE FOR THE ACCURACY OR COMPLETENESS OF SCANNED COPIES OF THIS PLAN SHEET.

MARK THOMAS & CO., INC.
7300 FOLSOM BLVD STE 203
SACRAMENTO, CA 95826

CITY OF CHICO
CAPITAL PROJECT SERVICES
411 MAIN STREET
CHICO, CA 95927

CONSTRUCTION DETAILS

NO SCALE

C-7

REVISED BY | DATE REVISED
E. WEEKS | J. PANGBURN
CALCULATED–DESIGNED BY | CHECKED BY
CONSULTANT FUNCTIONAL SUPERVISOR: JAMES MARSHALL PANGBURN
STATE OF CALIFORNIA – DEPARTMENT OF TRANSPORTATION — Caltrans

LAST REVISION 00-00-00 | DATE PLOTTED => $DATE | TIME PLOTTED => $TIME

PATH: V:\Chico-55-0131-SR32 Widening\CADD\Phase 2 - SR 99 to East of Park and Ride\Drawing\sr32_C1-C7 PLOT DATE: Nov 18, 2015-07:49:25am CAD USER: kfriedrich

BORDER LAST REVISED 7/2/2010 | USERNAME => $USER | DGN FILE => $REQUEST | RELATIVE BORDER SCALE IS IN INCHES 0 1 2 3 | UNIT 0000 | PROJECT NUMBER & PHASE 0313000246

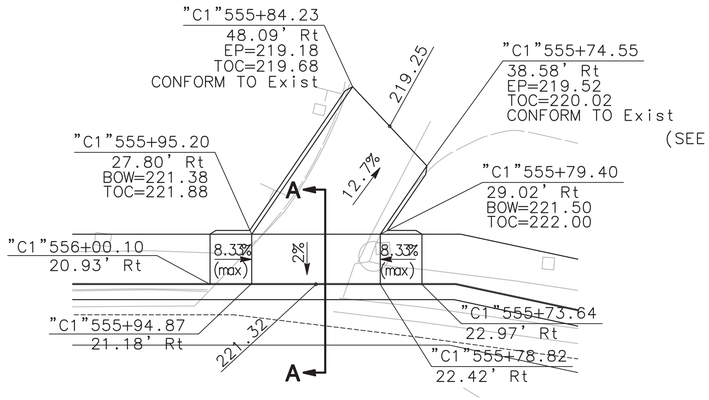

1 C-8 **DRIVEWAY DETAIL**
"C1"555+90
SCALE: 1"=10'

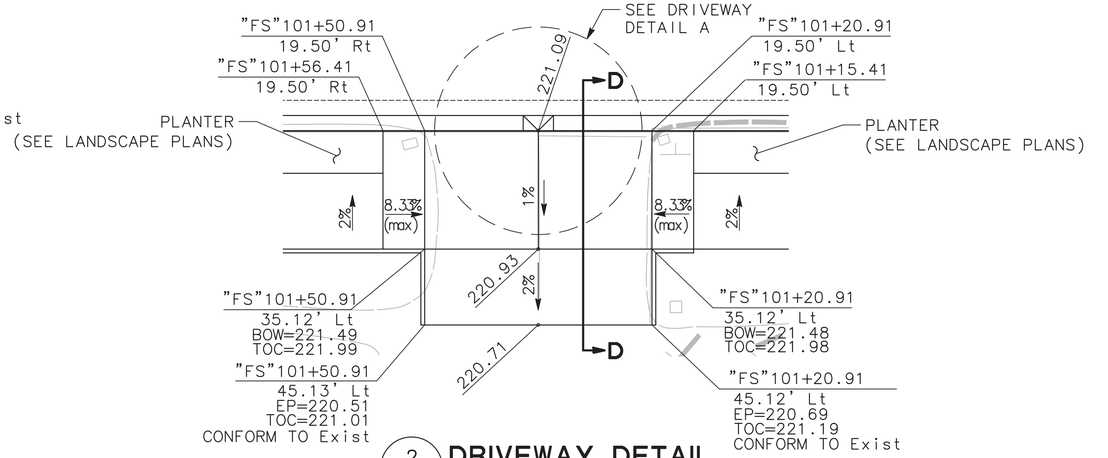

2 C-8 **DRIVEWAY DETAIL**
"FS"101+35
SCALE: 1"=10'

Dist	COUNTY	ROUTE	POST MILES TOTAL PROJECT	SHEET No.	TOTAL SHEETS
03	But	32	10.1/10.5	24	126

11-6-15
REGISTERED CIVIL ENGINEER DATE

JAMES MARSHALL PANGBURN No. 71445 Exp. 12/31/15 CIVIL — REGISTERED PROFESSIONAL ENGINEER — STATE OF CALIFORNIA

NOVEMBER 13, 2015
PLANS APPROVAL DATE

THE STATE OF CALIFORNIA OR ITS OFFICERS OR AGENTS SHALL NOT BE RESPONSIBLE FOR THE ACCURACY OR COMPLETENESS OF SCANNED COPIES OF THIS PLAN SHEET.

MARK THOMAS & CO., INC.
7300 FOLSOM BLVD STE 203
SACRAMENTO, CA 95826

CITY OF CHICO
CAPITAL PROJECT SERVICES
411 MAIN STREET
CHICO, CA 95927

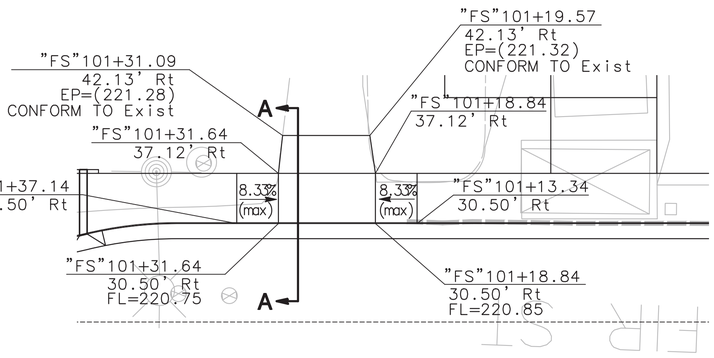

3 C-8 **DRIVEWAY DETAIL**
"FS"101+25
SCALE: 1"=10'

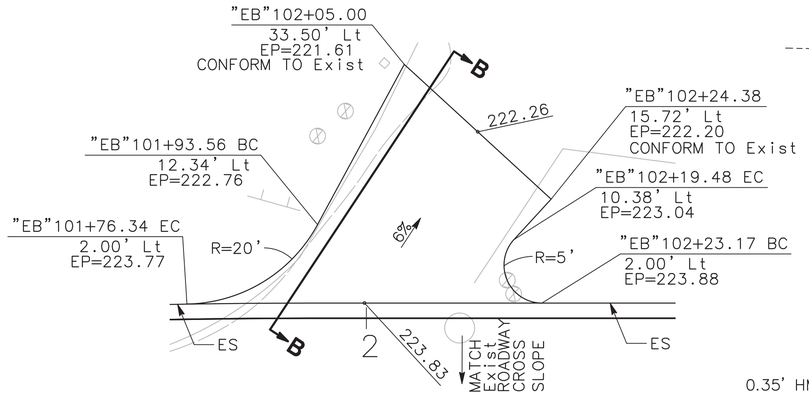

4 C-8 **DRIVEWAY DETAIL**
"EB"102+00
SCALE: 1"=10'

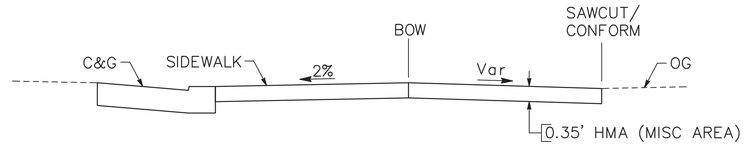

SECTION A-A

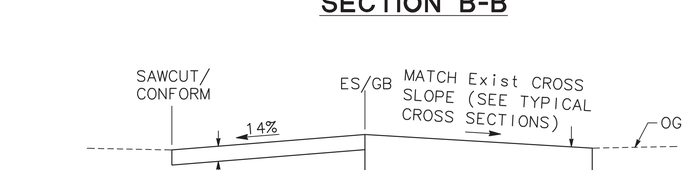

SECTION B-B

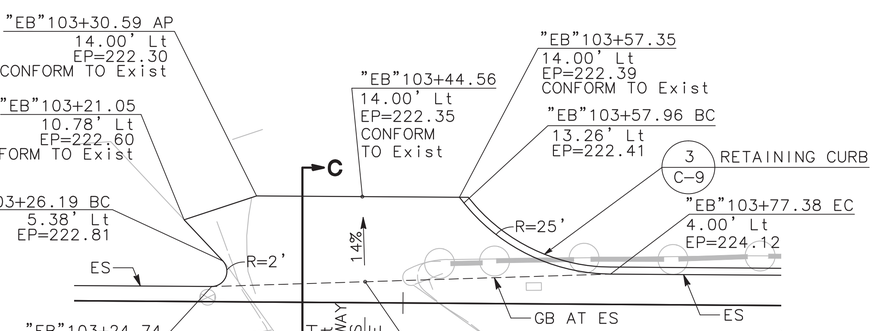

5 C-8 **DRIVEWAY DETAIL**
"EB"103+40
SCALE: 1"=10'

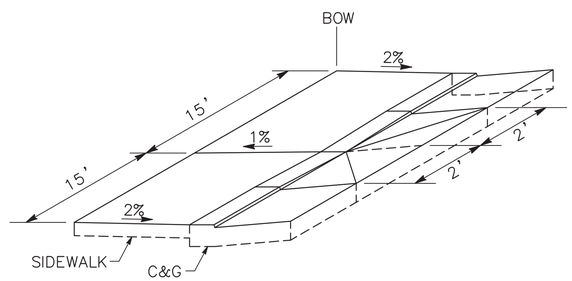

DRIVEWAY DETAIL A
"FS"101+35
NO SCALE

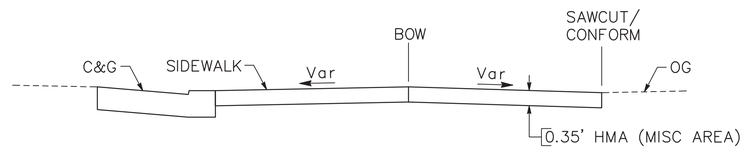

SECTION D-D

SECTION C-C

CONSTRUCTION DETAILS

NO SCALE

C-8

STATE OF CALIFORNIA - DEPARTMENT OF TRANSPORTATION
CONSULTANT FUNCTIONAL SUPERVISOR: JAMES MARSHALL PANGBURN
CALCULATED-DESIGNED BY: E. WEEKS
CHECKED BY: J. PANGBURN
REVISED BY | DATE REVISED

LAST REVISION: DATE PLOTTED => $DATE 00-00-00 | TIME PLOTTED => $TIME

PATH: V:\Chico-55-0131-SR32 Widening\CADD\Phase 2 - SR 99 to East of Park and Ride\Drawing\sr32_C1-C7 PLOT DATE: Nov 18, 2015-07:52:59am CAD USER: kfriedrich

BORDER LAST REVISED 7/2/2010 | USERNAME => $USER | DGN FILE => $REQUEST | RELATIVE BORDER SCALE IS IN INCHES 0 1 2 3 | UNIT 0000 | PROJECT NUMBER & PHASE 0313000246

Dist	COUNTY	ROUTE	POST MILES TOTAL PROJECT	SHEET No.	TOTAL SHEETS
03	But	32	10.1/10.5	25	126

11-6-15
REGISTERED CIVIL ENGINEER DATE

NOVEMBER 13, 2015
PLANS APPROVAL DATE

JAMES MARSHALL PANGBURN
No. 71445
Exp. 12/31/15
CIVIL
REGISTERED PROFESSIONAL ENGINEER
STATE OF CALIFORNIA

THE STATE OF CALIFORNIA OR ITS OFFICERS OR AGENTS SHALL NOT BE RESPONSIBLE FOR THE ACCURACY OR COMPLETENESS OF SCANNED COPIES OF THIS PLAN SHEET.

MARK THOMAS & CO., INC.
7300 FOLSOM BLVD STE 203
SACRAMENTO, CA 95826

CITY OF CHICO
CAPITAL PROJECT SERVICES
411 MAIN STREET
CHICO, CA 95927

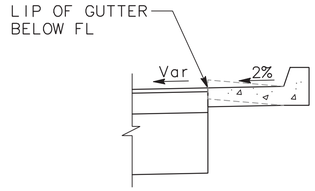

1 / C-9 C&G (Mod TYPE A2-6)

"WB"96+36.57, 5.23' Rt TO
"EB" 99+62.06, 14.00' Lt
SCALE: 1"=10'

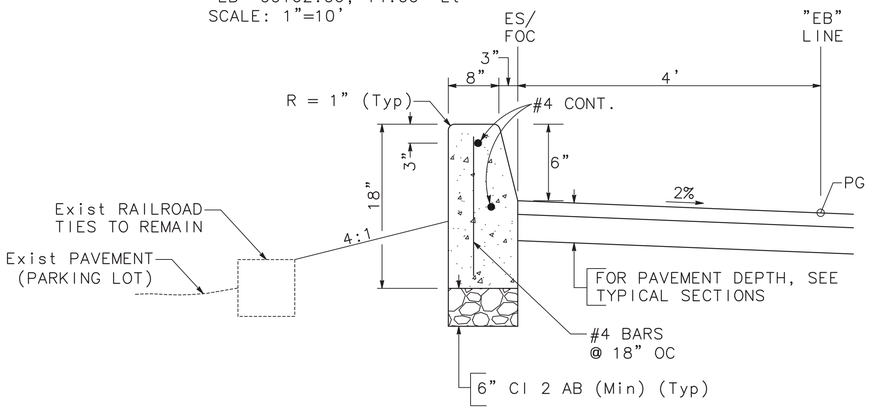

2 / C-9 MINOR CONCRETE (RETAINING CURB)

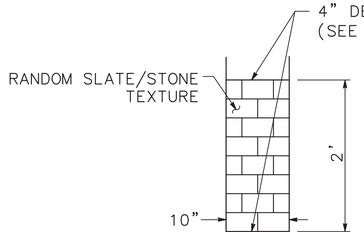

NOTE:
1. COLORED CONCRETE TO INCLUDE TAN COLOR HARDENER AND BRICK RED RELEASE AGENT.
2. JOINTS SHALL BE PLACED IN THE LONGITUDINAL DIRECTION EVERY 2', AND ALONG OUTER EDGES OF TEXTURED PAVING.

MINOR CONCRETE (STAMPED CONCRETE) DETAIL

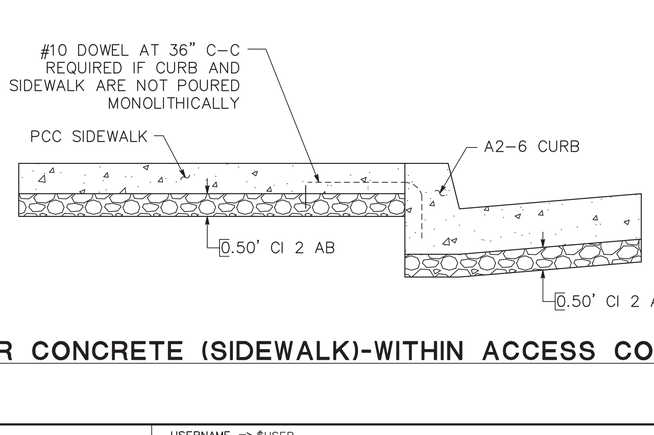

MINOR CONCRETE (SIDEWALK)-WITHIN ACCESS CONTROL

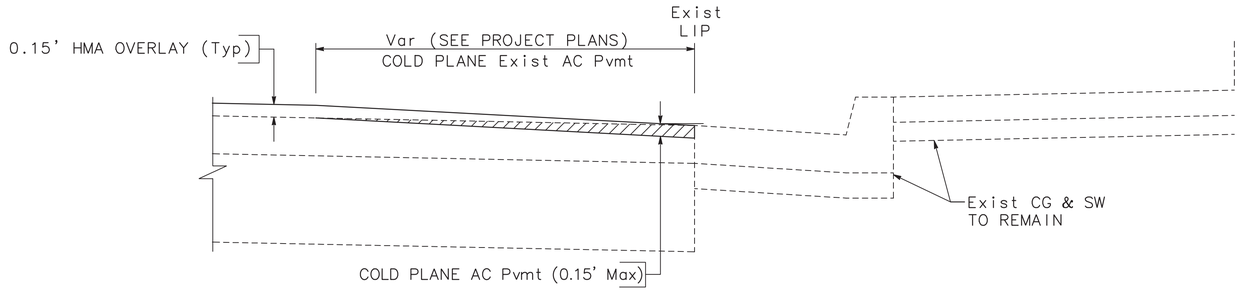

3 / C-9 COLD PLANE (EDGE GRIND) DETAIL

ELEVATION VIEW
NOTE: HMA (OPEN GRADED) IS NOT SHOWN

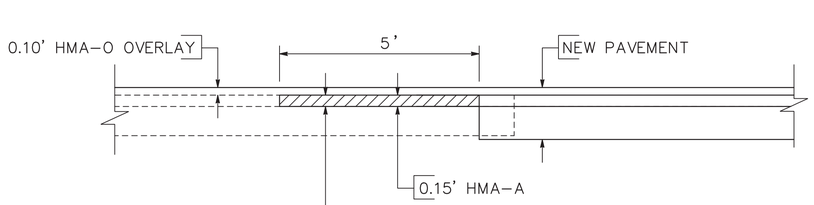

4 / C-9 COLD PLANE (T GRIND) DETAIL

ELEVATION VIEW

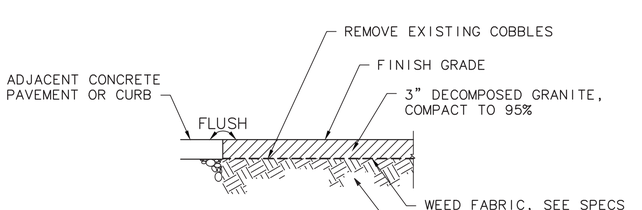

5 / C-9 DECOMPOSED GRANITE

CONSTRUCTION DETAILS

NO SCALE

C-9

STATE OF CALIFORNIA - DEPARTMENT OF TRANSPORTATION
Caltrans
CONSULTANT FUNCTIONAL SUPERVISOR: JAMES MARSHALL PANGBURN
CALCULATED-DESIGNED BY: E. WEEKS
CHECKED BY: J. PANGBURN
REVISED BY
DATE REVISED
LAST REVISION | DATE PLOTTED => $DATE | 00-00-00 | TIME PLOTTED => $TIME

PATH: V:\Chico-55-0131-SR32 Widening\CADD\Phase 2 - SR 99 to East of Park and Ride\Drawing\sr32_C8-C9 PLOT DATE: Nov 18, 2015-12:30:50pm CAD USER: kfriedrich

BORDER LAST REVISED 7/2/2010
USERNAME => $USER
DGN FILE => $REQUEST
RELATIVE BORDER SCALE IS IN INCHES 0 1 2 3
UNIT 0000
PROJECT NUMBER & PHASE 0313000246

Dist	COUNTY	ROUTE	POST MILES TOTAL PROJECT	SHEET No.	TOTAL SHEETS
03	But	32	10.1/10.5	26	126

11-6-15
REGISTERED CIVIL ENGINEER DATE

NOVEMBER 13, 2015
PLANS APPROVAL DATE

JAMES MARSHALL PANGBURN No. 71445 Exp. 12/31/15 CIVIL — REGISTERED PROFESSIONAL ENGINEER — STATE OF CALIFORNIA

THE STATE OF CALIFORNIA OR ITS OFFICERS OR AGENTS SHALL NOT BE RESPONSIBLE FOR THE ACCURACY OR COMPLETENESS OF SCANNED COPIES OF THIS PLAN SHEET.

MARK THOMAS & CO., INC.
7300 FOLSOM BLVD STE 203
SACRAMENTO, CA 95826

CITY OF CHICO
CAPITAL PROJECT SERVICES
411 MAIN STREET
CHICO, CA 95927

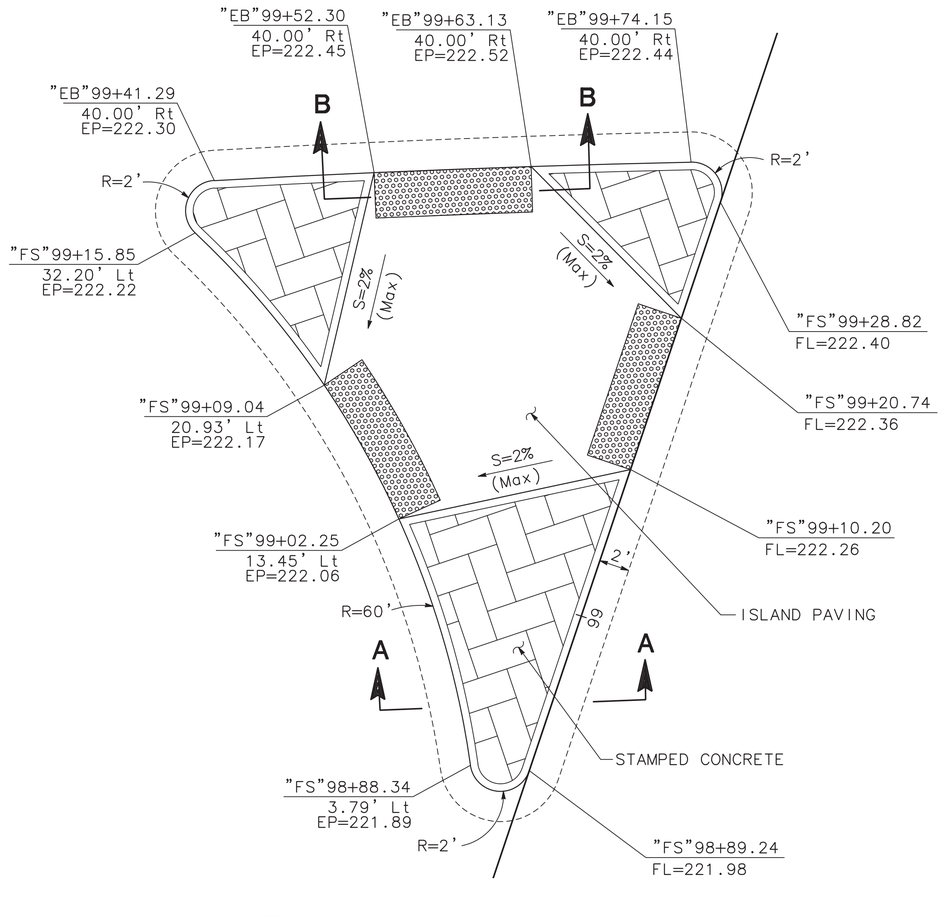

1 C-10 **ISLAND DETAIL**
SCALE: 1"=5'

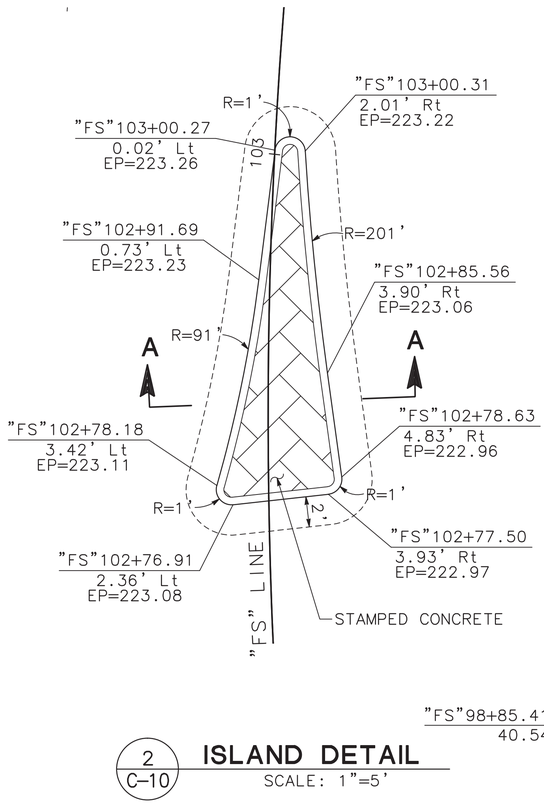

2 C-10 **ISLAND DETAIL**
SCALE: 1"=5'

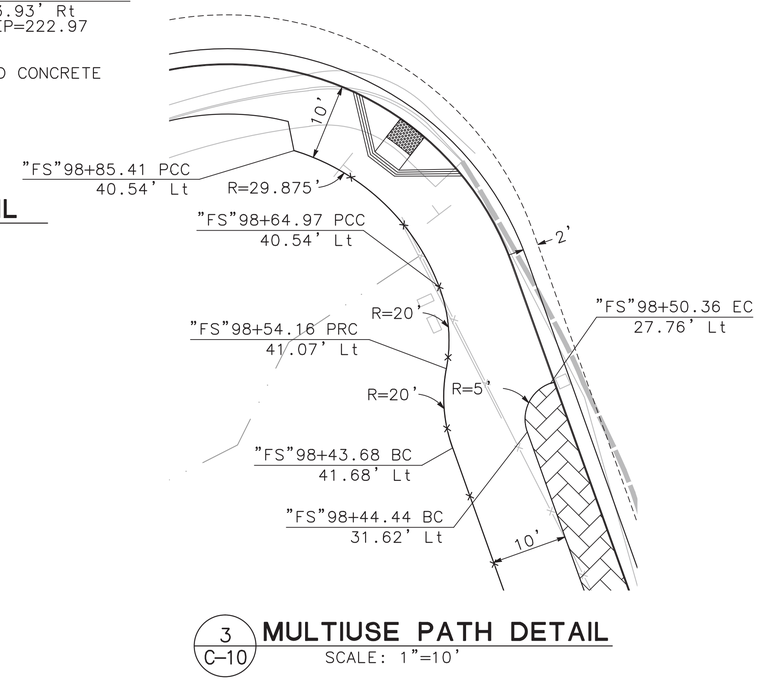

3 C-10 **MULTIUSE PATH DETAIL**
SCALE: 1"=10'

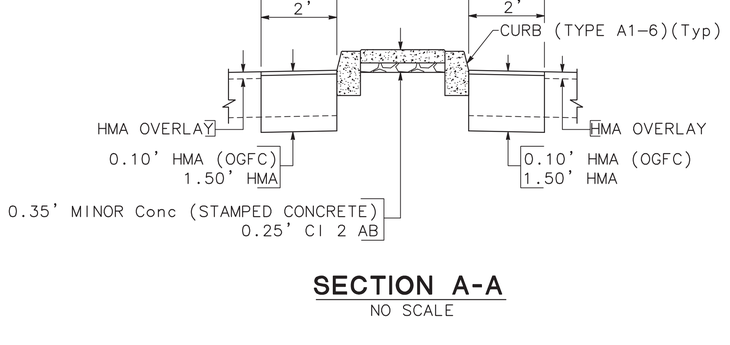

SECTION A-A
NO SCALE

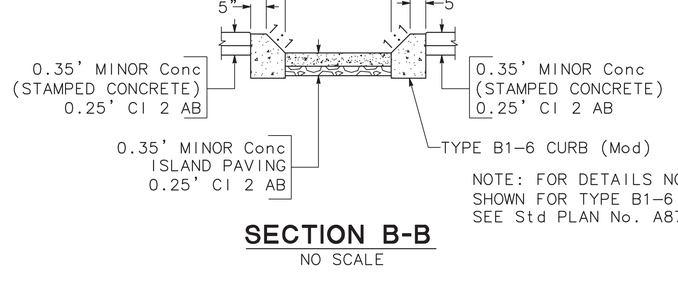

NOTE: FOR DETAILS NOT SHOWN FOR TYPE B1-6 CURB(Mod), SEE Std PLAN No. A87A

SECTION B-B
NO SCALE

CONSTRUCTION DETAILS
NO SCALE

C-10

STATE OF CALIFORNIA – DEPARTMENT OF TRANSPORTATION
Caltrans
CONSULTANT FUNCTIONAL SUPERVISOR: JAMES MARSHALL PANGBURN
CALCULATED–DESIGNED BY: E. WEEKS
CHECKED BY: J. PANGBURN
REVISED BY
DATE REVISED
LAST REVISION 00-00-00
DATE PLOTTED => $DATE
TIME PLOTTED => $TIME

PATH: V:\Chico-55-0131-SR32 Widening\CADD\Phase 2 - SR 99 to East of Park and Ride\Drawings\sr32_C8-C9 PLOT DATE: Nov 18, 2015-07:56:23am CAD USER: kfriedrich

BORDER LAST REVISED 7/2/2010
USERNAME => $USER
DGN FILE => $REQUEST
RELATIVE BORDER SCALE IS IN INCHES 0 1 2 3
UNIT 0000
PROJECT NUMBER & PHASE 0313000246

Dist	COUNTY	ROUTE	POST MILES TOTAL PROJECT	SHEET No.	TOTAL SHEETS
03	But	32	10.1/10.5	27	126

11-6-15
REGISTERED CIVIL ENGINEER DATE

JAMES MARSHALL PANGBURN
No. 71445
Exp. 12/31/15
CIVIL
REGISTERED PROFESSIONAL ENGINEER
STATE OF CALIFORNIA

NOVEMBER 13, 2015
PLANS APPROVAL DATE

THE STATE OF CALIFORNIA OR ITS OFFICERS OR AGENTS SHALL NOT BE RESPONSIBLE FOR THE ACCURACY OR COMPLETENESS OF SCANNED COPIES OF THIS PLAN SHEET.

MARK THOMAS & CO., INC.
7300 FOLSOM BLVD STE 203
SACRAMENTO, CA 95826

CITY OF CHICO
CAPITAL PROJECT SERVICES
411 MAIN STREET
CHICO, CA 95927

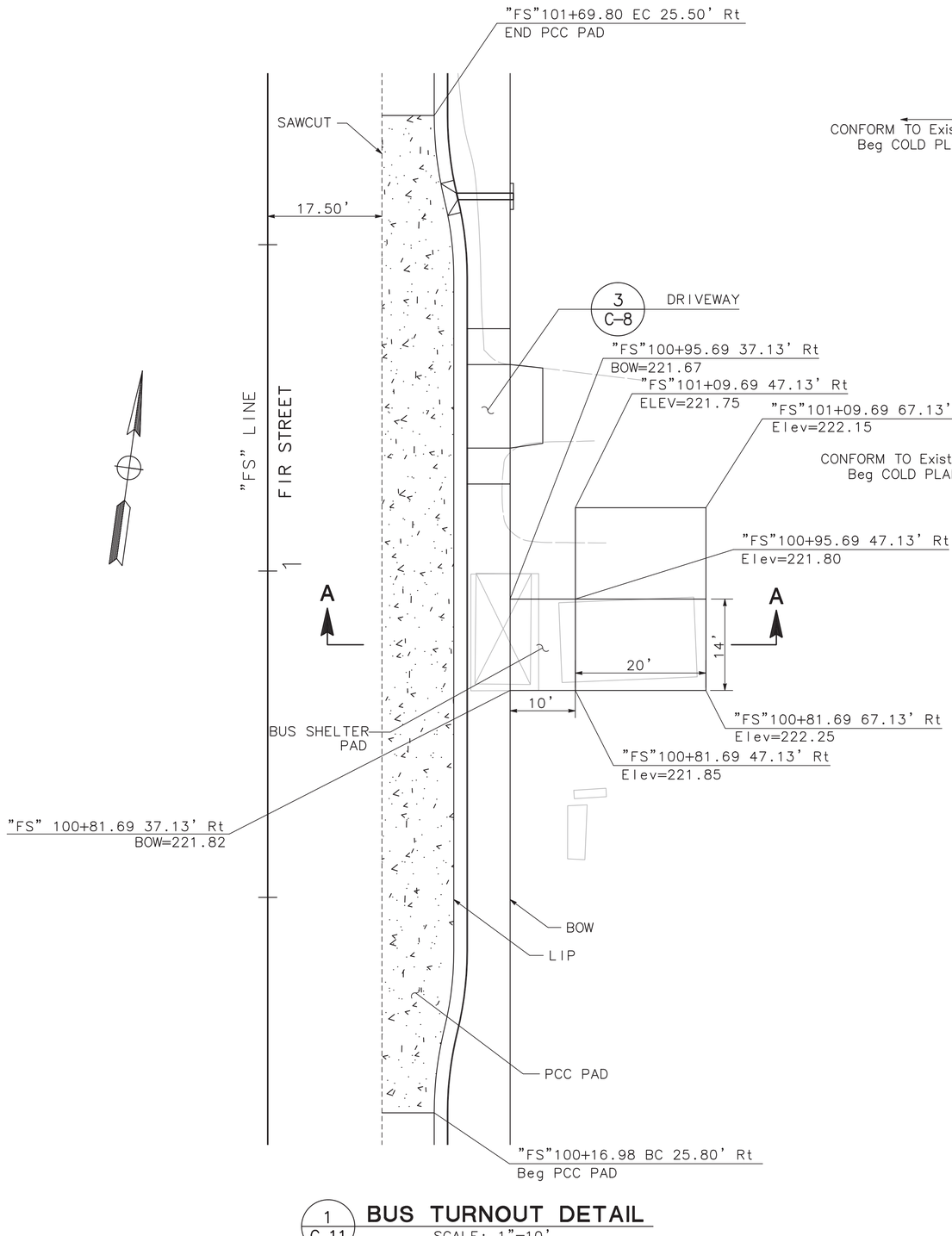

1 / C-11 **BUS TURNOUT DETAIL**
SCALE: 1"=10'

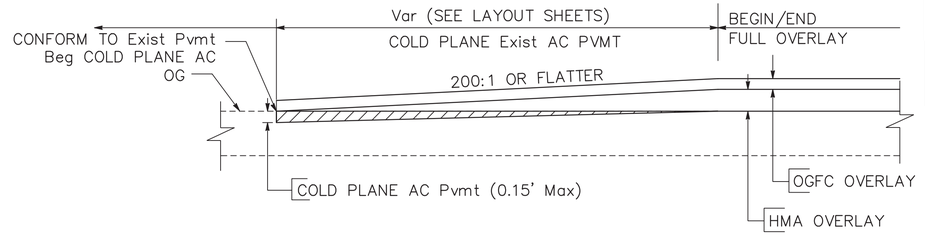

TRANSVERSE HMA TAPER TO EXISTING HMA PAVEMENT
ELEVATION VIEW

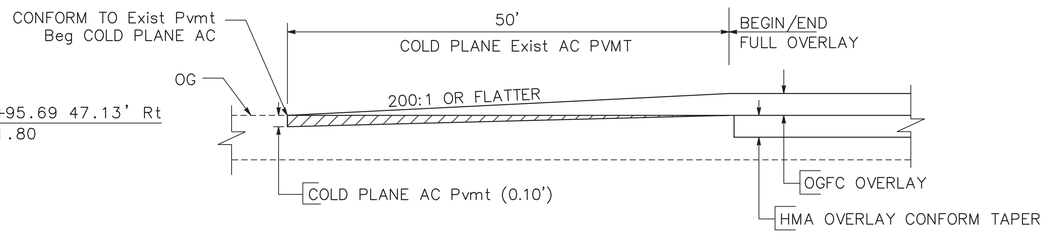

TRANSVERSE OGFC TAPER TO EXISTING HMA PAVEMENT
ELEVATION VIEW

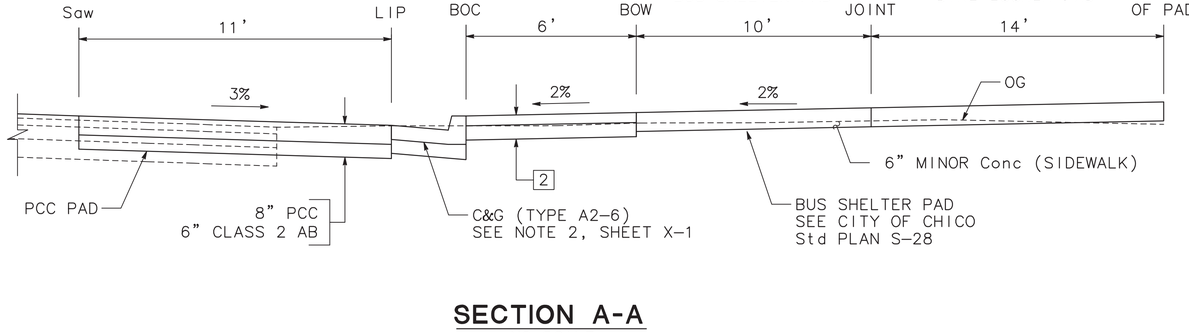

SECTION A-A
NO SCALE

CONSTRUCTION DETAILS
SCALE: 1"=10'

C-11

REVISED BY	DATE REVISED

CALCULATED-DESIGNED BY: E. WEEKS
CHECKED BY: J. PANGBURN
CONSULTANT FUNCTIONAL SUPERVISOR: JAMES MARSHALL PANGBURN
STATE OF CALIFORNIA - DEPARTMENT OF TRANSPORTATION
Caltrans

LAST REVISION DATE PLOTTED => $DATE
00-00-00 TIME PLOTTED => $TIME

PATH: V:\Chico-55-0131-SR32 Widening\CADD\Phase 2 - SR 99 to East of Park and Ride\Drawing\sr32_C8-C9 PLOT DATE: Nov 18, 2015-07:57:28am CAD USER: kfriedrich

BORDER LAST REVISED 7/2/2010 | USERNAME => $USER | DGN FILE => $REQUEST | RELATIVE BORDER SCALE IS IN INCHES 0 1 2 3 | UNIT 0000 | PROJECT NUMBER & PHASE 0313000246

Dist	COUNTY	ROUTE	POST MILES TOTAL PROJECT	SHEET No.	TOTAL SHEETS
03	But	32	10.1/10.5	28	126

11-6-15
REGISTERED CIVIL ENGINEER DATE

JAMES MARSHALL PANGBURN No. 71445 Exp. 12/31/15 CIVIL — REGISTERED PROFESSIONAL ENGINEER — STATE OF CALIFORNIA

NOVEMBER 13, 2015
PLANS APPROVAL DATE

THE STATE OF CALIFORNIA OR ITS OFFICERS OR AGENTS SHALL NOT BE RESPONSIBLE FOR THE ACCURACY OR COMPLETENESS OF SCANNED COPIES OF THIS PLAN SHEET.

MARK THOMAS & CO., INC.
7300 FOLSOM BLVD STE 203
SACRAMENTO, CA 95826

CITY OF CHICO
CAPITAL PROJECT SERVICES
411 MAIN STREET
CHICO, CA 95927

LEGEND

- NEW STRUCTURAL SECTION (SEE TYPICAL SECTIONS)
- 0.10' HMA-O OVERLAY
- 0.15' (Min) HMA-A OVERLAY
- 0.10' HMA-O OVERLAY
  0.15' (Min) HMA-A OVERLAY

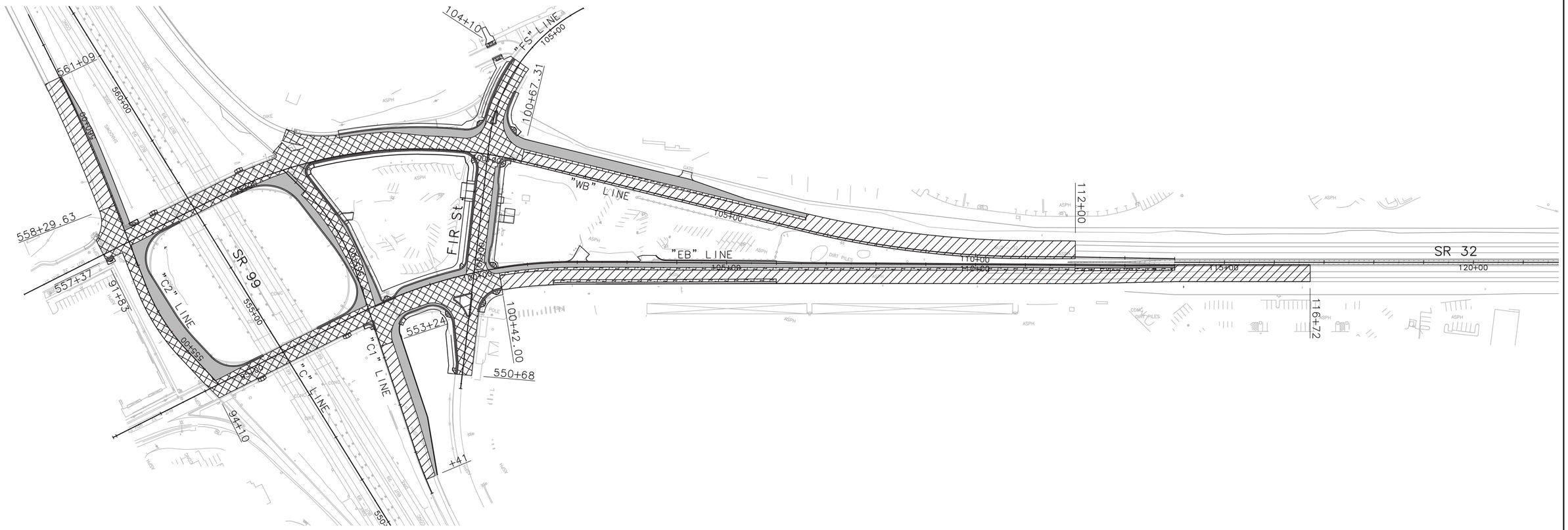

PAVEMENT REHABILITATION LAYOUT

CONSTRUCTION DETAILS

SCALE: 1"=100'

C-12

STATE OF CALIFORNIA – DEPARTMENT OF TRANSPORTATION
CONSULTANT FUNCTIONAL SUPERVISOR: JAMES MARSHALL PANGBURN
CALCULATED-DESIGNED BY: E. WEEKS
CHECKED BY: J. PANGBURN
REVISED BY
DATE REVISED

LAST REVISION 00-00-00
DATE PLOTTED => $DATE
TIME PLOTTED => $TIME

BORDER LAST REVISED 7/2/2010
USERNAME => $USER
DGN FILE => $REQUEST
RELATIVE BORDER SCALE IS IN INCHES 0 1 2 3
UNIT 0000
PROJECT NUMBER & PHASE 0313000246

PATH: V:\Chico-55-0131-SR32 Widening\CADD\Phase 2 - SR 99 to East of Park and Ride\Drawings\sr32_C12 PLOT DATE: Nov 18, 2015-07:59:09am CAD USER: kfriedrich

Dist	COUNTY	ROUTE	POST MILES TOTAL PROJECT	SHEET No.	TOTAL SHEETS
03	But	32	10.1/10.5	29	126

11-6-15
REGISTERED CIVIL ENGINEER DATE

NOVEMBER 13, 2015
PLANS APPROVAL DATE

REGISTERED PROFESSIONAL ENGINEER
JAMES MARSHALL PANGBURN
No. 71445
Exp. 12/31/15
CIVIL
STATE OF CALIFORNIA

THE STATE OF CALIFORNIA OR ITS OFFICERS OR AGENTS SHALL NOT BE RESPONSIBLE FOR THE ACCURACY OR COMPLETENESS OF SCANNED COPIES OF THIS PLAN SHEET.

MARK THOMAS & CO., INC.
7300 FOLSOM BLVD STE 203
SACRAMENTO, CA 95826

CITY OF CHICO
CAPITAL PROJECT SERVICES
411 MAIN STREET
CHICO, CA 95927

LEGEND

EROSION CONTROL (TYPE 1)

EROSION CONTROL (TYPE 2)

EROSION CONTROL TYPE 1

SEQUENCE	ITEM	MATERIAL DESCRIPTION	MATERIAL TYPE	APPLICATION RATE
STEP 1	ROLLED EROSION CONTROL PRODUCT (JUTE MESH)	NETTING	JUTE MESH	–
STEP 2	HIGHWAY PLANTING	–	–	–

SEE LANDSCAPE PLANS FOR DETAILS

EROSION CONTROL TYPE 2

SEQUENCE	ITEM	MATERIAL DESCRIPTION	MATERIAL TYPE	APPLICATION RATE
STEP 1	HYDROSEED	SEED	MIX 1	15.93 LB/ACRE
		FIBER	WOOD	495 LB/ACRE
		COMMERCIAL FERTILIZER	–	770 LB/ACRE
		ORGANIC FERTILIZER	–	2.3 LB/ACRE
STEP 2	ROLLED EROSION CONTROL PRODUCT (JUTE MESH)	NETTING	JUTE MESH	–

SEE LANDSCAPE PLANS FOR DETAILS

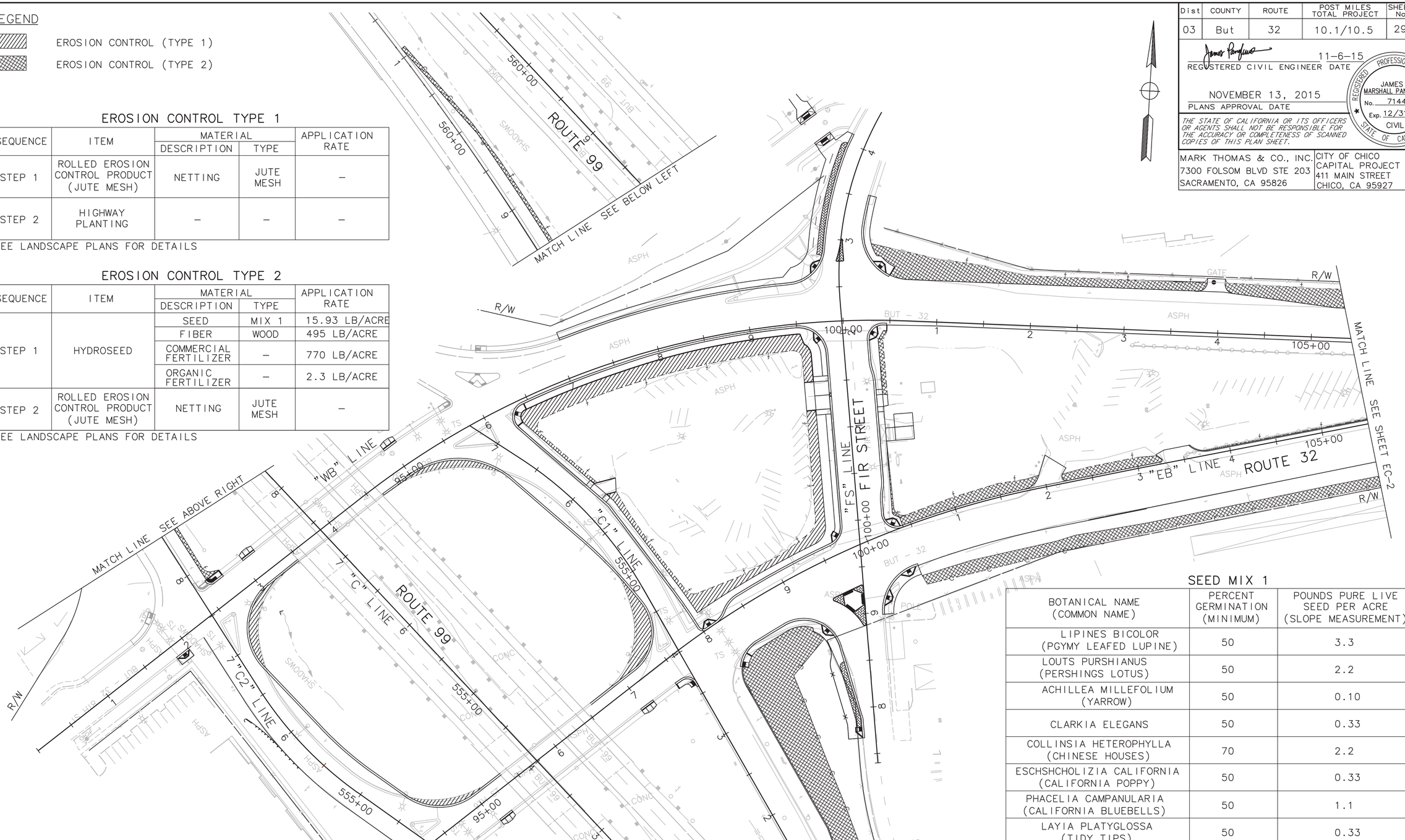

SEED MIX 1

BOTANICAL NAME (COMMON NAME)	PERCENT GERMINATION (MINIMUM)	POUNDS PURE LIVE SEED PER ACRE (SLOPE MEASUREMENT)
LIPINES BICOLOR (PGYMY LEAFED LUPINE)	50	3.3
LOUTS PURSHIANUS (PERSHINGS LOTUS)	50	2.2
ACHILLEA MILLEFOLIUM (YARROW)	50	0.10
CLARKIA ELEGANS	50	0.33
COLLINSIA HETEROPHYLLA (CHINESE HOUSES)	70	2.2
ESCHSHCHOLIZIA CALIFORNIA (CALIFORNIA POPPY)	50	0.33
PHACELIA CAMPANULARIA (CALIFORNIA BLUEBELLS)	50	1.1
LAYIA PLATYGLOSSA (TIDY TIPS)	50	0.33
NEMOPHILA MENZEISII (BABY BLUE EYES)	50	0.33
	TOTAL	10.19

EROSION CONTROL

SCALE: 1" = 50'

EC-1

THIS PLAN ACCURATE FOR EROSION CONTROL ONLY

STATE OF CALIFORNIA – DEPARTMENT OF TRANSPORTATION
Caltrans

CONSULTANT FUNCTIONAL SUPERVISOR: JAMES MARSHALL PANGBURN
CALCULATED-DESIGNED BY: E. WEEKS
CHECKED BY: J. PANGBURN
REVISED BY
DATE REVISED

PATH: V:\Chico-55-0131-SR32 Widening\CADD\Phase 2 - SR 99 to East FUERNAMENT\Plans\Sheet Dwg\
PLOT DATE: Nov 18, 2015-08:00:45am
CAD USER: kfriedrich

LAST REVISION 00-00-00
DATE PLOTTED => $DATE
TIME PLOTTED => $TIME

BORDER LAST REVISED 7/2/2010
USERNAME => $USER
DGN FILE => $REQUEST
RELATIVE BORDER SCALE IS IN INCHES 0 1 2 3
UNIT 0000
PROJECT NUMBER & PHASE 0313000246

Dist	COUNTY	ROUTE	POST MILES TOTAL PROJECT	SHEET No.	TOTAL SHEETS
03	But	32	10.1/10.5	30	126

11-6-15
REGISTERED CIVIL ENGINEER DATE

JAMES MARSHALL PANGBURN
No. 71445
Exp. 12/31/15
CIVIL
REGISTERED PROFESSIONAL ENGINEER
STATE OF CALIFORNIA

NOVEMBER 13, 2015
PLANS APPROVAL DATE

THE STATE OF CALIFORNIA OR ITS OFFICERS OR AGENTS SHALL NOT BE RESPONSIBLE FOR THE ACCURACY OR COMPLETENESS OF SCANNED COPIES OF THIS PLAN SHEET.

MARK THOMAS & CO., INC.
7300 FOLSOM BLVD STE 203
SACRAMENTO, CA 95826

CITY OF CHICO
CAPITAL PROJECT SERVICES
411 MAIN STREET
CHICO, CA 95927

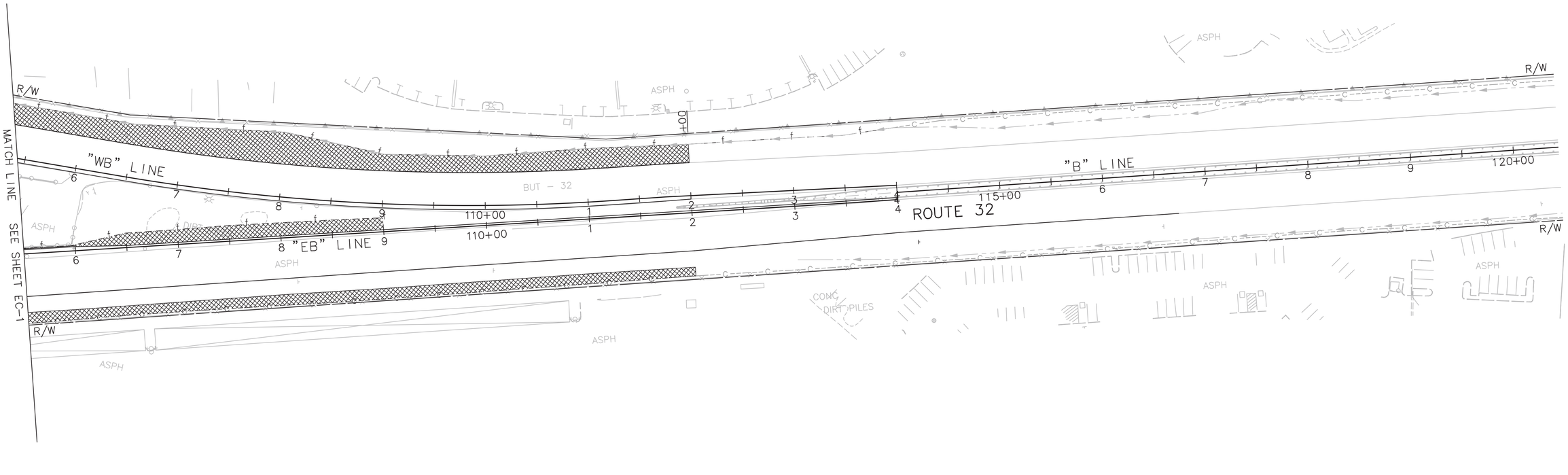

EROSION CONTROL

SCALE: 1" = 50'

EC-2

THIS PLAN ACCURATE FOR EROSION CONTROL ONLY

STATE OF CALIFORNIA – DEPARTMENT OF TRANSPORTATION	CONSULTANT FUNCTIONAL SUPERVISOR: JAMES MARSHALL PANGBURN	CALCULATED–DESIGNED BY: E. WEEKS	CHECKED BY: J. PANGBURN	REVISED BY	DATE REVISED

BORDER LAST REVISED 7/2/2010 | USERNAME => $USER, DGN FILE => $REQUEST | RELATIVE BORDER SCALE IS IN INCHES 0 1 2 3 | UNIT 0000 | PROJECT NUMBER & PHASE 0313000246

LAST REVISION 00-00-00 | DATE PLOTTED => $DATE | TIME PLOTTED => $TIME

PLOT DATE: Nov 18, 2015–08:01:15am | CAD USER: kfriedrich | PATH: V:\Chico-55-0131-SR32 Widening\CADD\Phase 2 – SR 99 to East\FUEL\Mitigation\02\Sheets\

Dist	COUNTY	ROUTE	POST MILES TOTAL PROJECT	SHEET No.	TOTAL SHEETS
03	But	32	10.1/10.5	31	126

11-6-15
REGISTERED CIVIL ENGINEER DATE

JAMES MARSHALL PANGBURN
No. 71445
Exp. 12/31/15
CIVIL
REGISTERED PROFESSIONAL ENGINEER
STATE OF CALIFORNIA

NOVEMBER 13, 2015
PLANS APPROVAL DATE

THE STATE OF CALIFORNIA OR ITS OFFICERS OR AGENTS SHALL NOT BE RESPONSIBLE FOR THE ACCURACY OR COMPLETENESS OF SCANNED COPIES OF THIS PLAN SHEET.

MARK THOMAS & CO., INC.
7300 FOLSOM BLVD STE 203
SACRAMENTO, CA 95826

CITY OF CHICO
CAPITAL PROJECT SERVICES
411 MAIN STREET
CHICO, CA 95927

EROSION CONTROL

STATION LIMITS	DIRECTION	ROLLED EROSION CONTROL PRODUCT (JUTE MESH)	HYDROSEED	REMARKS
		SQFT	SQFT	
"WB" 100+50 TO "WB' 103+70	LT	4756	4756	TYPE 2
"WB" 103+70 TO "WB' 112+00	LT	15989	15989	TYPE 2
"WB" 96+50 TO "WB' 99+50	RT	5779	–	TYPE 1
"EB" 100+50 TO "EB" 112+00	RT	11943	11943	TYPE 2
"C1" 550+40 TO "C1" 553+50	RT	12415	12415	TYPE 2
"C2" 557+85 TO "C2" 661+10	RT	1173	1173	TYPE 2
"EB" 103+75 TO "EB" 109+00	LT	3652	3652	TYPE 2
"EB" 100+40 TO "EB" 101+90	LT	1611	1611	TYPE 2
"EB" 102+25 TO "EB" 103+30	LT	987	987	TYPE 2
"EB" 98+00 TO "EB" 99+60	LT	3537	–	TYPE 1
"WB" 93+50 TO "C2" 556+70	RT	765	–	TYPE 1
"FS" 100+00 TO "FS" 100+75	RT	112	112	TYPE 2
"FS" 101+30 TO "FS" 102+00	RT	339	339	TYPE 2
"C2" 554+50 TO "EB" 95+20	RT	354	–	TYPE 1
"EB" 96+80 TO "C1" 555+00	LT	1330	–	TYPE 1
"C1" 556+50 TO "WB" 94+60	LT	548	–	TYPE 1
BID TOTAL		65,290	52,977	

EROSION CONTROL QUANTITIES
ECQ-1

STATE OF CALIFORNIA – DEPARTMENT OF TRANSPORTATION
Caltrans
CONSULTANT FUNCTIONAL SUPERVISOR: JAMES MARSHALL PANGBURN
CALCULATED-DESIGNED BY: E. WEEKS
CHECKED BY: J. PANGBURN
REVISED BY
DATE REVISED

LAST REVISION 00-00-00
DATE PLOTTED => $DATE
TIME PLOTTED => $TIME

PATH: V:\Chico-55-0131-SR32 Widening\CADD\Phase 2 - SR 99 to East\ERSH\Mandrake\EQ\Drawing\
CAD USER: kfriedrich
PLOT DATE: Nov 18, 2015-08:02:14am

BORDER LAST REVISED 7/2/2010
USERNAME => $USER
DGN FILE => $REQUEST
RELATIVE BORDER SCALE IS IN INCHES 0 1 2 3
UNIT 0000
PROJECT NUMBER & PHASE 0313000246

Dist	COUNTY	ROUTE	POST MILES TOTAL PROJECT	SHEET No.	TOTAL SHEETS
03	But	32	10.1/10.5	32	126

REGISTERED CIVIL ENGINEER — 11-6-15

PLANS APPROVAL DATE — NOVEMBER 13, 2015

JAMES MARSHALL PANGBURN No. 71445 Exp. 12/31/15 CIVIL — REGISTERED PROFESSIONAL ENGINEER — STATE OF CALIFORNIA

THE STATE OF CALIFORNIA OR ITS OFFICERS OR AGENTS SHALL NOT BE RESPONSIBLE FOR THE ACCURACY OR COMPLETENESS OF SCANNED COPIES OF THIS PLAN SHEET.

MARK THOMAS & CO., INC.
7300 FOLSOM BLVD STE 203
SACRAMENTO, CA 95826

CITY OF CHICO
CAPITAL PROJECT SERVICES
411 MAIN STREET
CHICO, CA 95927

NOTES:

1. ALL STATION AND OFFSET CALLOUTS TO INLETS ARE TO FLOW LINE AT FACE OF CURB UNLESS OTHERWISE NOTED.
2. EXISTING DRAINAGE LOCATIONS ARE APPROXIMATE ONLY. CONTRACTOR SHALL VERIFY LOCATION AND ELEVATION BEFORE MODIFYING EXISTING DRAINAGE FACILITIES
3. TOP OF GRATE ELEVATIONS INCLUDE GUTTER DEPRESSIONS WHERE NOTED.

LEGEND

- X-X — DRAINAGE SYSTEM NUMBER
- 1 — BIOFILTRATION SWALE NUMBER
- (x) — DRAINAGE ITEM
- DITCH FLOW LINE
- EXISTING DITCH FLOW LINE
- —sd— EXISTING STORM DRAIN PIPE
- SD PROPOSED STORM DRAIN PIPE
- PROPOSED INLET
- BIOFILTRATION STRIP
- X / D-X — DRAINAGE DETAIL REFERENCE

ABBREVIATIONS

Rem	REMOVE
SDMH	STORM DRAIN MANHOLE
HMA OD	HOT MIX ASPHALT OVERSIDE DRAIN
C&G	CURB AND GUTTER

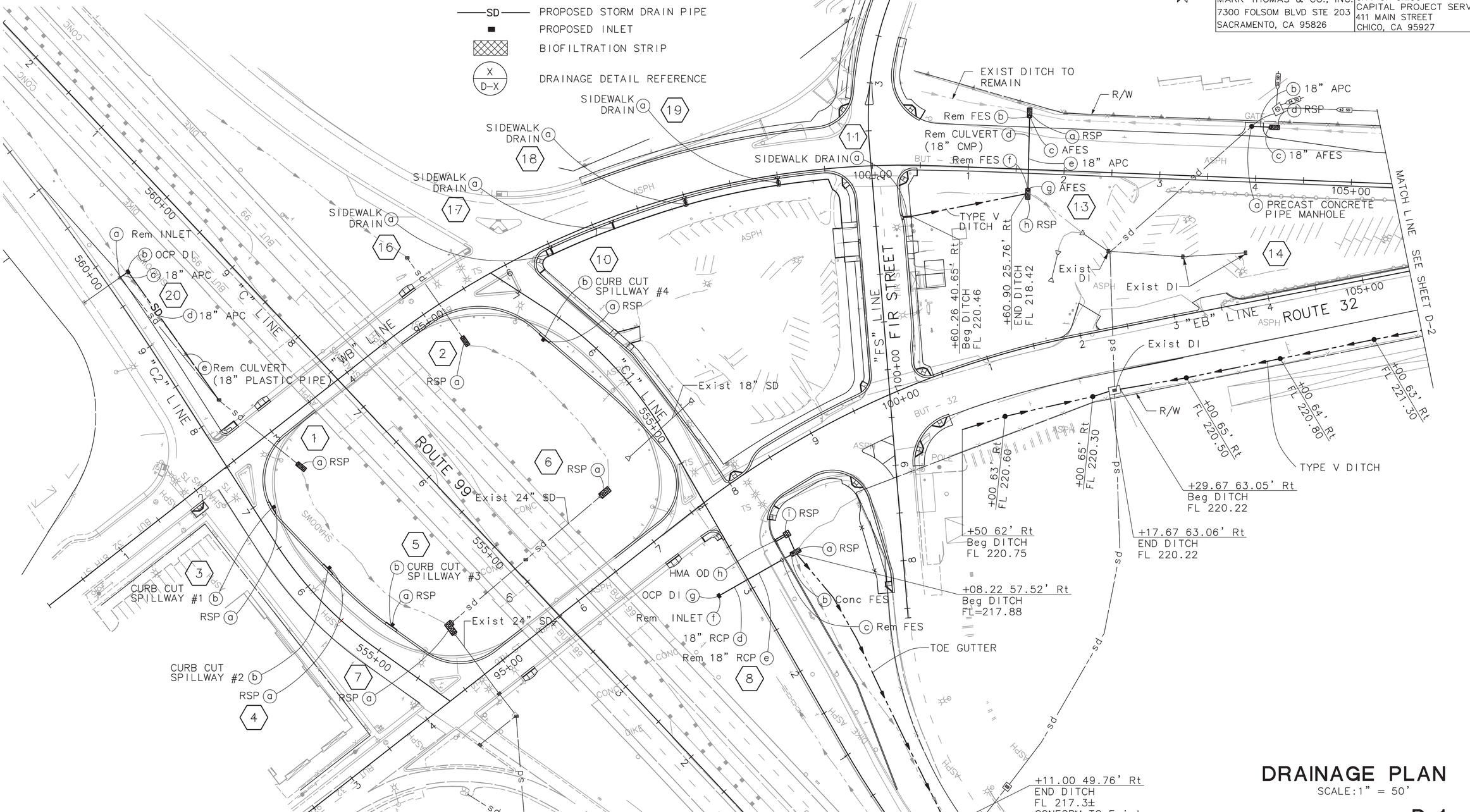

DRAINAGE PLAN

SCALE:1" = 50'

D-1

THIS PLAN ACCURATE FOR DRAINAGE ONLY

STATE OF CALIFORNIA – DEPARTMENT OF TRANSPORTATION — Caltrans

CONSULTANT FUNCTIONAL SUPERVISOR: JAMES MARSHALL PANGBURN

CALCULATED–DESIGNED BY: E. WEEKS — CHECKED BY: J. PANGBURN

REVISED BY	DATE REVISED

LAST REVISION DATE PLOTTED => $DATE
00-00-00 TIME PLOTTED => $TIME

PATH: V:\Chico-55-0131-SR32 Widening\CADD\Phase 2 - SR 99 to East\[redacted]\Drawing\
PLOT DATE: Nov 18, 2015–08:04:10am
CAD USER: kfriedrich

BORDER LAST REVISED 7/2/2010

USERNAME => $USER
DGN FILE => $REQUEST

RELATIVE BORDER SCALE IS IN INCHES 0 1 2 3

UNIT 0000

PROJECT NUMBER & PHASE 0313000246

Dist	COUNTY	ROUTE	POST MILES TOTAL PROJECT	SHEET No.	TOTAL SHEETS
03	But	32	10.1/10.5	33	126

11-6-15
REGISTERED CIVIL ENGINEER DATE

NOVEMBER 13, 2015
PLANS APPROVAL DATE

REGISTERED PROFESSIONAL ENGINEER
JAMES MARSHALL PANGBURN
No. 71445
Exp. 12/31/15
CIVIL
STATE OF CALIFORNIA

THE STATE OF CALIFORNIA OR ITS OFFICERS OR AGENTS SHALL NOT BE RESPONSIBLE FOR THE ACCURACY OR COMPLETENESS OF SCANNED COPIES OF THIS PLAN SHEET.

MARK THOMAS & CO., INC.
7300 FOLSOM BLVD STE 203
SACRAMENTO, CA 95826

CITY OF CHICO
CAPITAL PROJECT SERVICES
411 MAIN STREET
CHICO, CA 95927

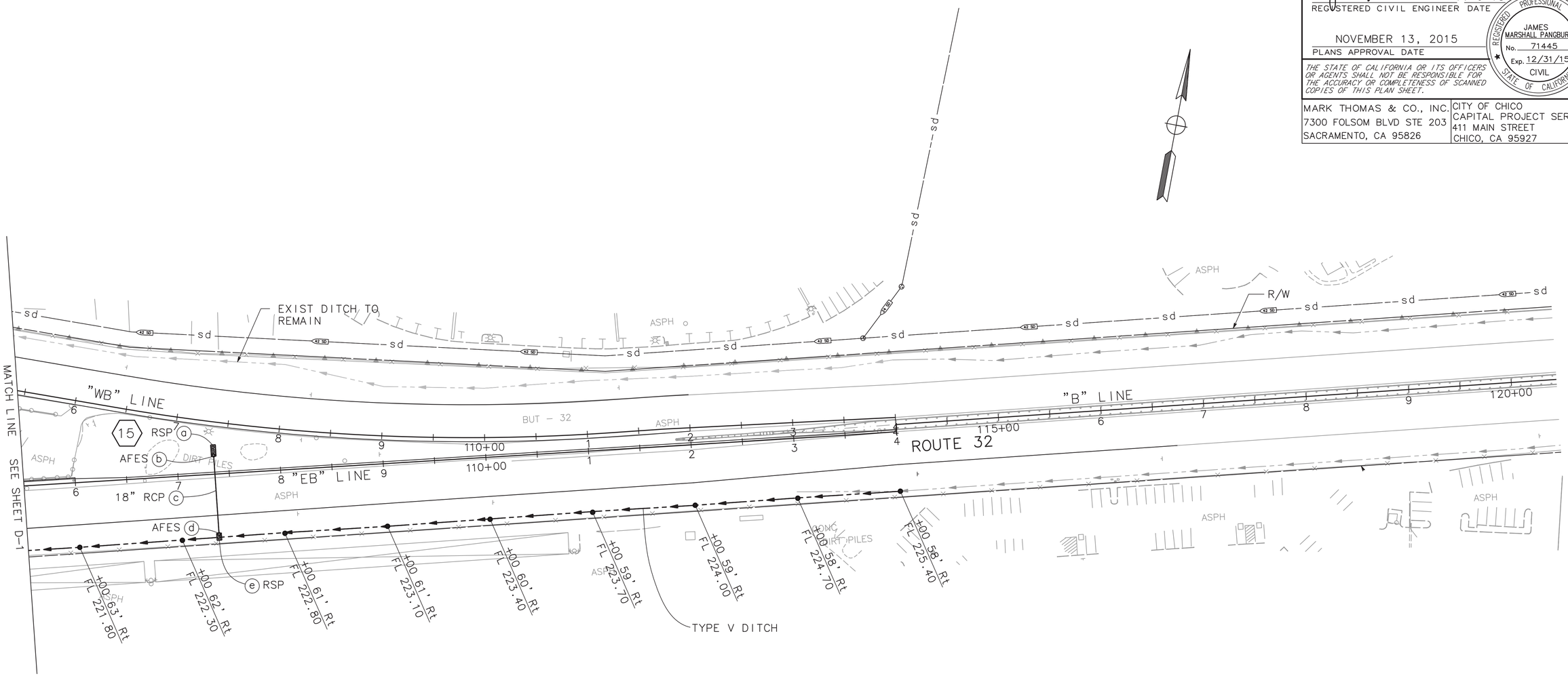

DRAINAGE PLAN

SCALE: 1" = 50'

D-2

THIS PLAN ACCURATE FOR DRAINAGE ONLY

STATE OF CALIFORNIA – DEPARTMENT OF TRANSPORTATION	CONSULTANT FUNCTIONAL SUPERVISOR: JAMES MARSHALL PANGBURN	CALCULATED–DESIGNED BY: E. WEEKS	REVISED BY / DATE REVISED
		CHECKED BY: J. PANGBURN	

LAST REVISION 00-00-00
DATE PLOTTED => $DATE
TIME PLOTTED => $TIME

BORDER LAST REVISED 7/2/2010
USERNAME => $USER
DGN FILE => $REQUEST
RELATIVE BORDER SCALE IS IN INCHES 0 1 2 3
UNIT 0000
PROJECT NUMBER & PHASE 0313000246

PATH: V:\Chico-55-0131-SR32 Widening\CADD\Phase 2 - SR 99 to East\FLEX\Mainline\D-2.dgn
PLOT DATE: Nov 18, 2015–08:04:44am
CAD USER: kfriedrich

Dist	COUNTY	ROUTE	POST MILES TOTAL PROJECT	SHEET No.	TOTAL SHEETS
03	But	32	10.1/10.5	34	126

REGISTERED CIVIL ENGINEER — 11-6-15

PLANS APPROVAL DATE — NOVEMBER 13, 2015

REGISTERED PROFESSIONAL ENGINEER — JAMES MARSHALL PANGBURN — No. 71445 — Exp. 12/31/15 — CIVIL — STATE OF CALIFORNIA

THE STATE OF CALIFORNIA OR ITS OFFICERS OR AGENTS SHALL NOT BE RESPONSIBLE FOR THE ACCURACY OR COMPLETENESS OF SCANNED COPIES OF THIS PLAN SHEET.

MARK THOMAS & CO., INC.
7300 FOLSOM BLVD STE 203
SACRAMENTO, CA 95826

CITY OF CHICO
CAPITAL PROJECT SERVICES
411 MAIN STREET
CHICO, CA 95927

NOTES:
1. FOR RSP DIMENSIONS, SEE DD-1.

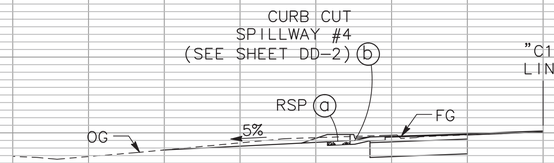

DRAINAGE SYSTEM NO. 10
"C1" 556+50.00

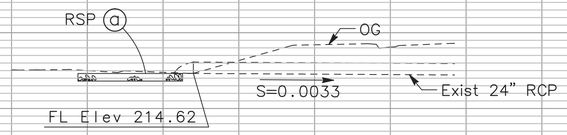

DRAINAGE SYSTEM NO. 7
"EB" 94+77.24

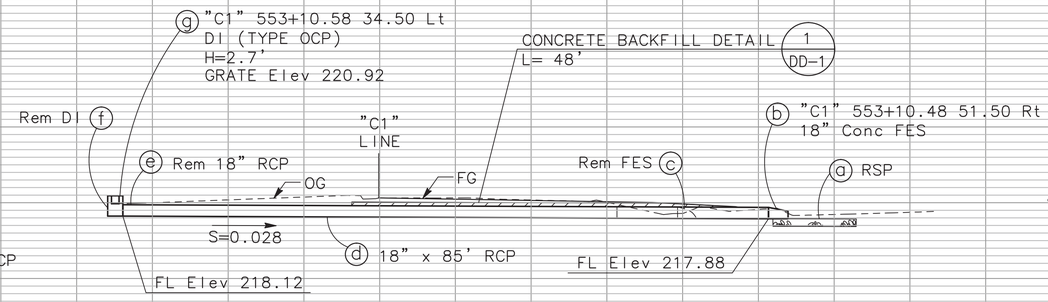

DRAINAGE SYSTEM NO. 8
"C1" 553+10.54

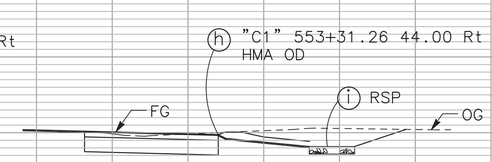

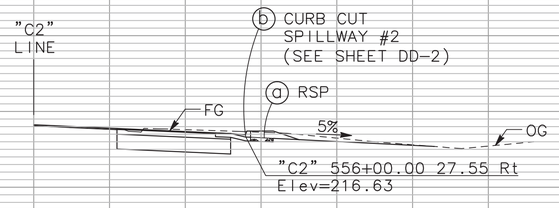

DRAINAGE SYSTEM NO. 4
"C2" 555+99.97

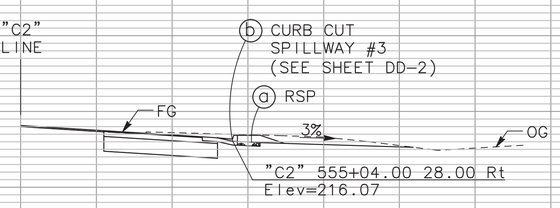

DRAINAGE SYSTEM NO. 5
"C2" 555+04.00

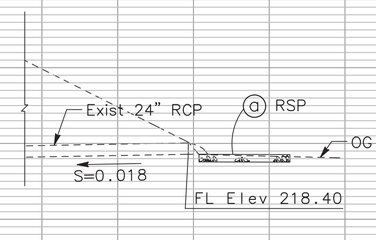

DRAINAGE SYSTEM NO. 6
"EB" 96+84.24

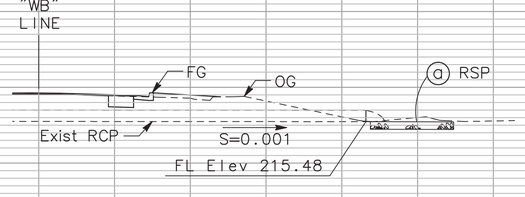

DRAINAGE SYSTEM NO. 1
"WB" 93+00.17

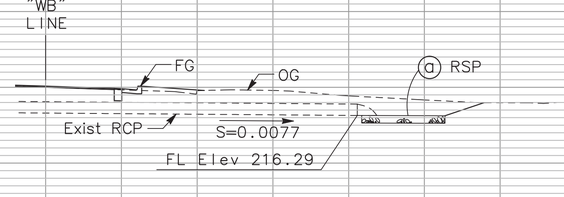

DRAINAGE SYSTEM NO. 2
"WB" 95+20.96

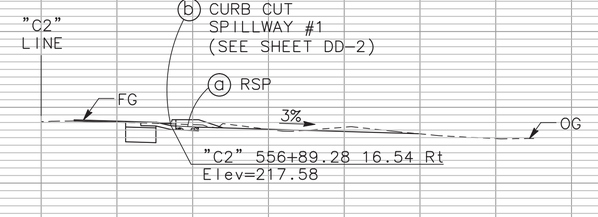

DRAINAGE SYSTEM NO. 3
"C2" 556+89.28

DRAINAGE PROFILES
SCALE: HORIZ 1"=10'
VERT 1"=10'

DP-1

CONSULTANT FUNCTIONAL SUPERVISOR: JAMES MARSHALL PANGBURN
CALCULATED-DESIGNED BY: E. WEEKS
CHECKED BY: J. PANGBURN
REVISED BY
DATE REVISED
STATE OF CALIFORNIA – DEPARTMENT OF TRANSPORTATION — Caltrans

LAST REVISION DATE PLOTTED => $DATE
00-00-00 TIME PLOTTED => $TIME

PATH: V:\Chico-55-0131-SR32 Widening\CADD\Phase 2 - SR 99 to East of Park and Ride\Drawings\sr32_DP1-DP2 PLOT DATE: Nov 18, 2015–08:10:43am CAD USER: kfriedrich

BORDER LAST REVISED 7/2/2010 | USERNAME => $USER | DGN FILE => $REQUEST | RELATIVE BORDER SCALE IS IN INCHES 0 1 2 3 | UNIT 0000 | PROJECT NUMBER & PHASE 0313000246

Dist	COUNTY	ROUTE	POST MILES TOTAL PROJECT	SHEET No.	TOTAL SHEETS
03	But	32	10.1/10.5	35	126

REGISTERED CIVIL ENGINEER — 11-6-15

PLANS APPROVAL DATE — NOVEMBER 13, 2015

JAMES MARSHALL PANGBURN No. 71445 Exp. 12/31/15 CIVIL — REGISTERED PROFESSIONAL ENGINEER — STATE OF CALIFORNIA

THE STATE OF CALIFORNIA OR ITS OFFICERS OR AGENTS SHALL NOT BE RESPONSIBLE FOR THE ACCURACY OR COMPLETENESS OF SCANNED COPIES OF THIS PLAN SHEET.

MARK THOMAS & CO., INC.
7300 FOLSOM BLVD STE 203
SACRAMENTO, CA 95826

CITY OF CHICO
CAPITAL PROJECT SERVICES
411 MAIN STREET
CHICO, CA 95927

NOTES:
1. FOR RSP DIMENSIONS, SEE DD-1.

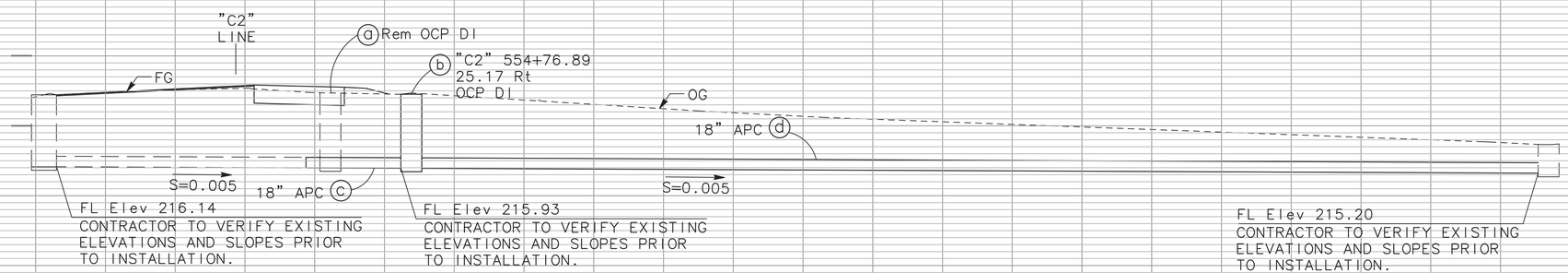

DRAINAGE SYSTEM NO. 20
"EB" 107+36.00

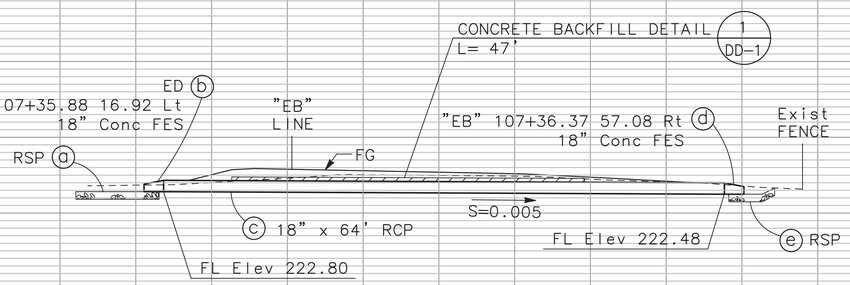

DRAINAGE SYSTEM NO. 15
"EB" 107+36.00

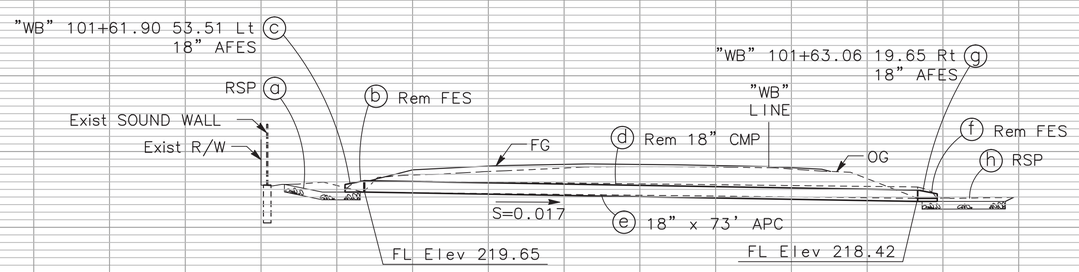

DRAINAGE SYSTEM NO. 13
"WB" 101+62.75

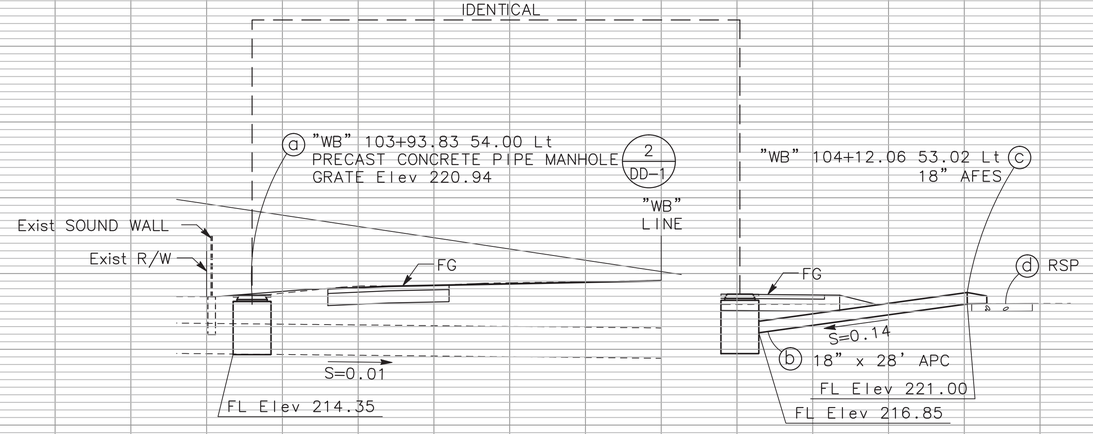

DRAINAGE SYSTEM NO. 14
"WB" 103+93.83

DRAINAGE PROFILES
SCALE: HORIZ 1"=10'
VERT 1"=10'

DP-2

REVISED BY | DATE REVISED
E. WEEKS | J. PANGBURN
CALCULATED-DESIGNED BY | CHECKED BY
J. SUPERVISOR | JAMES MARSHALL PANGBURN
CONSULTANT FUNCTIONAL SUPERVISOR
STATE OF CALIFORNIA - DEPARTMENT OF TRANSPORTATION
Caltrans

LAST REVISION 00-00-00 | DATE PLOTTED => $DATE | TIME PLOTTED => $TIME

PATH: V:\Chico-55-0131-SR32 Widening\CADD\Phase 2 - SR 99 to East of Park and Ride\Drawing\sr32_DP1-DP2 PLOT DATE: Nov 18, 2015-08:11:45am CAD USER: kfriedrich

BORDER LAST REVISED 7/2/2010 | USERNAME => $USER | DGN FILE => $REQUEST | RELATIVE BORDER SCALE IS IN INCHES 0 1 2 3 | UNIT 0000 | PROJECT NUMBER & PHASE 0313000246

Dist	COUNTY	ROUTE	POST MILES TOTAL PROJECT	SHEET No.	TOTAL SHEETS
03	But	32	10.1/10.5	36	126

11-6-15
REGISTERED CIVIL ENGINEER DATE

NOVEMBER 13, 2015
PLANS APPROVAL DATE

REGISTERED PROFESSIONAL ENGINEER
JAMES MARSHALL PANGBURN
No. 71445
Exp. 12/31/15
CIVIL
STATE OF CALIFORNIA

THE STATE OF CALIFORNIA OR ITS OFFICERS OR AGENTS SHALL NOT BE RESPONSIBLE FOR THE ACCURACY OR COMPLETENESS OF SCANNED COPIES OF THIS PLAN SHEET.

MARK THOMAS & CO., INC.
7300 FOLSOM BLVD STE 203
SACRAMENTO, CA 95826

CITY OF CHICO
CAPITAL PROJECT SERVICES
411 MAIN STREET
CHICO, CA 95927

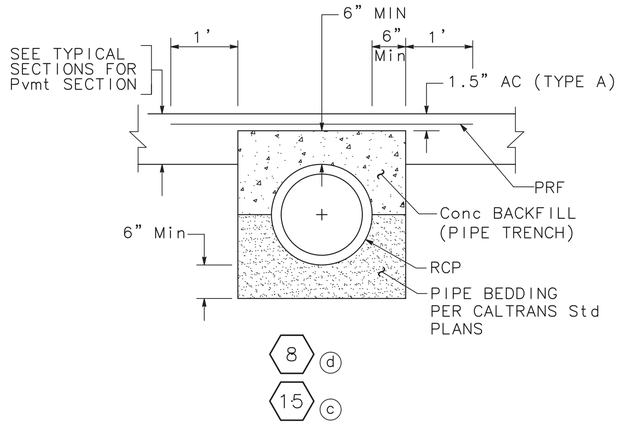

CONCRETE BACKFILL DETAIL 1 / DD-1
NO SCALE

DRAINAGE SYSTEM No.	L (LF)	W (LF)	D (LF)
1 a, 2 a, 8 a, 13 a h, 15 a e	11	4.5	1.25
6 a, 7 a	12	6	1.25
SPILLWAY 3 a, 4 a, 5 a, 10 a	3	3	0.50
8 i	6	6	1.25

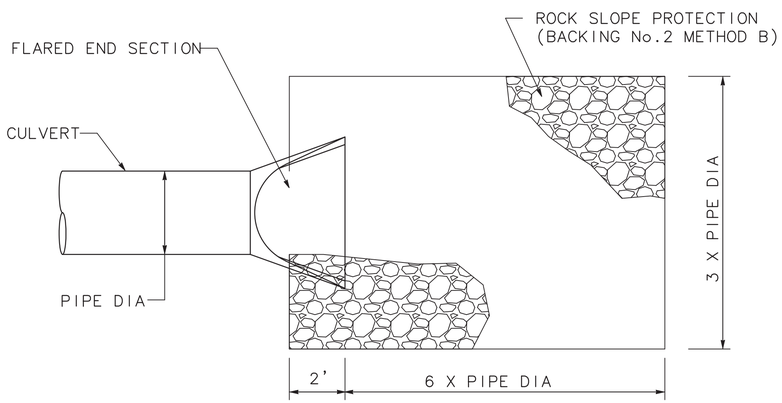

PLAN

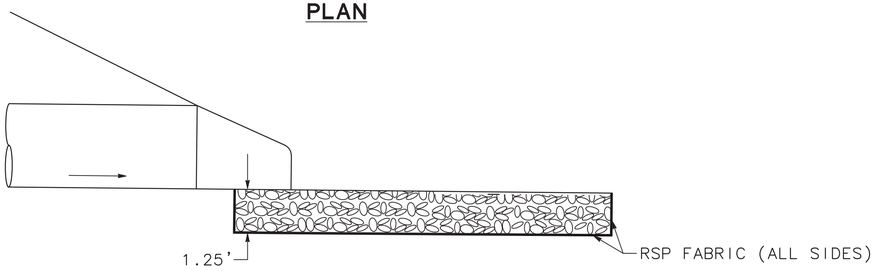

ELEVATION

ROCK OUTLET PROTECTION

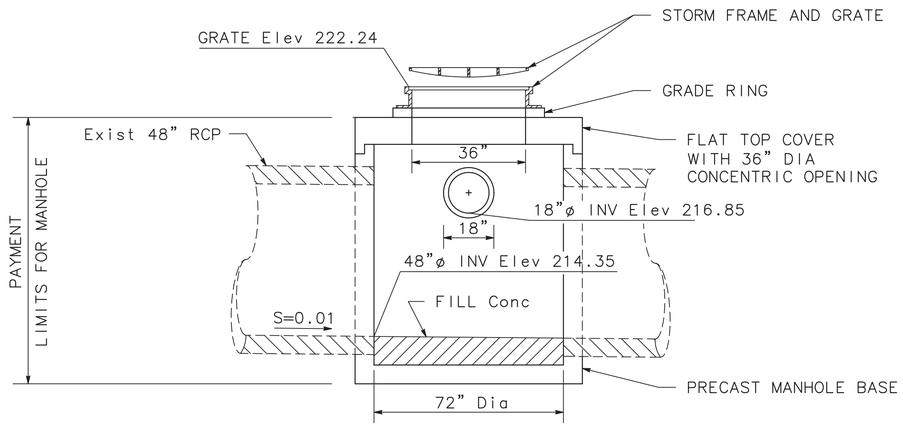

PRECAST CONCRETE PIPE MANHOLE 2 / DD-1
NO SCALE

DRAINAGE DETAILS
NO SCALE

DD-1

STATE OF CALIFORNIA – DEPARTMENT OF TRANSPORTATION
Caltrans®

CONSULTANT FUNCTIONAL SUPERVISOR: JAMES MARSHALL PANGBURN
CALCULATED-DESIGNED BY: E. WEEKS
CHECKED BY: J. PANGBURN
REVISED BY
DATE REVISED

PATH: V:\Chico-55-0131-SR32 Widening\CADD\Phase 2 - SR 99 to East Fork Mansfield Ditch\Drawing\ PLOT DATE: Nov 18, 2015-08:14:23am CAD USER: kfriedrich

LAST REVISION 00-00-00 DATE PLOTTED => $DATE TIME PLOTTED => $TIME

BORDER LAST REVISED 7/2/2010 | USERNAME => $USER DGN FILE => $REQUEST | RELATIVE BORDER SCALE IS IN INCHES 0 1 2 3 | UNIT 0000 | PROJECT NUMBER & PHASE 0313000246

Dist	COUNTY	ROUTE	POST MILES TOTAL PROJECT	SHEET No.	TOTAL SHEETS
03	But	32	10.1/10.5	37	126

11-6-15
REGISTERED CIVIL ENGINEER DATE

NOVEMBER 13, 2015
PLANS APPROVAL DATE

REGISTERED PROFESSIONAL ENGINEER
JAMES MARSHALL PANGBURN
No. 71445
Exp. 12/31/15
CIVIL
STATE OF CALIFORNIA

THE STATE OF CALIFORNIA OR ITS OFFICERS OR AGENTS SHALL NOT BE RESPONSIBLE FOR THE ACCURACY OR COMPLETENESS OF SCANNED COPIES OF THIS PLAN SHEET.

MARK THOMAS & CO., INC.
7300 FOLSOM BLVD STE 203
SACRAMENTO, CA 95826

CITY OF CHICO
CAPITAL PROJECT SERVICES
411 MAIN STREET
CHICO, CA 95927

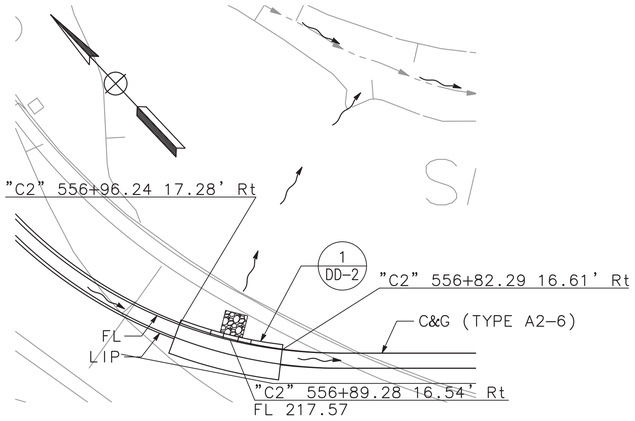

3 **CURB CUT SPILLWAY #1**
NO SCALE

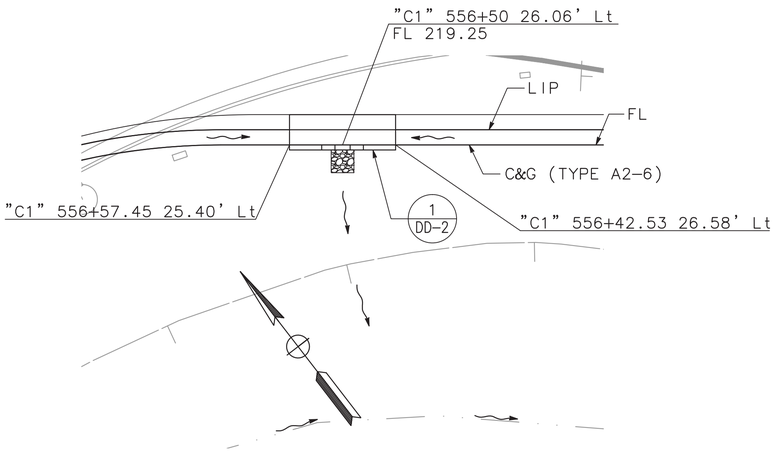

10 **CURB CUT SPILLWAY #4**
NO SCALE

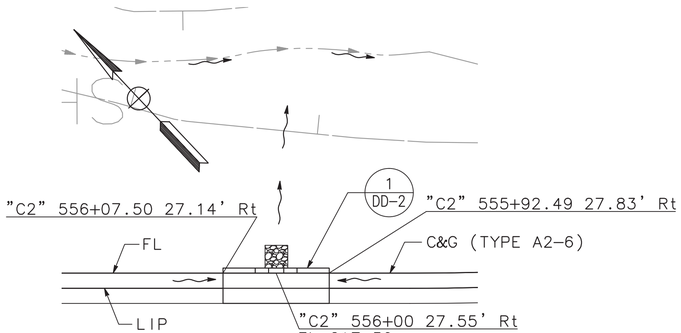

4 **CURB CUT SPILLWAY #2**
NO SCALE

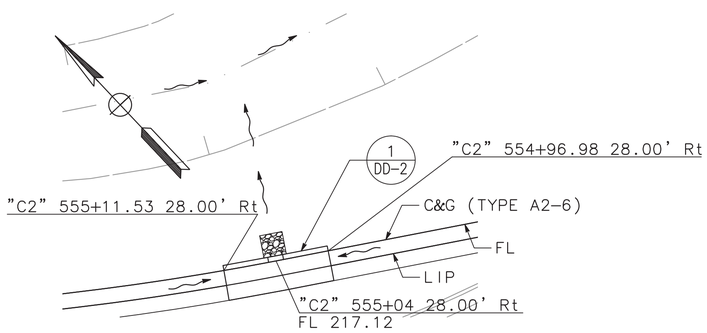

5 **CURB CUT SPILLWAY #3**
NO SCALE

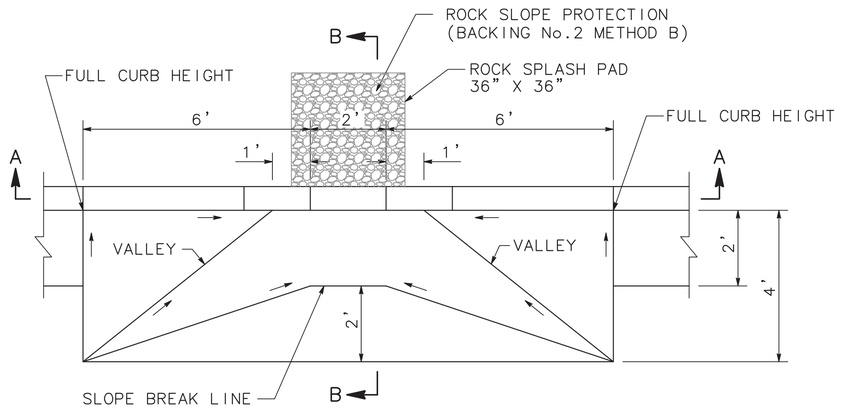

PLAN

CURB CUT SPILLWAY DETAIL 1 DD-2
NO SCALE

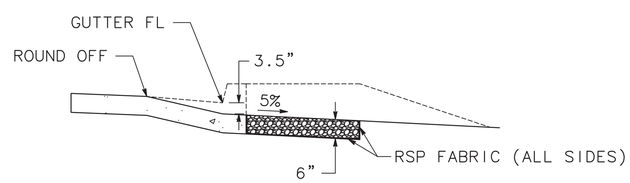

SECTION B-B

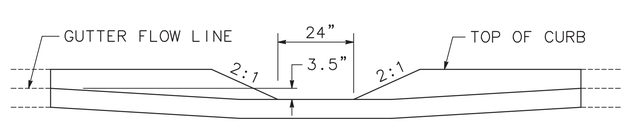

SECTION A-A

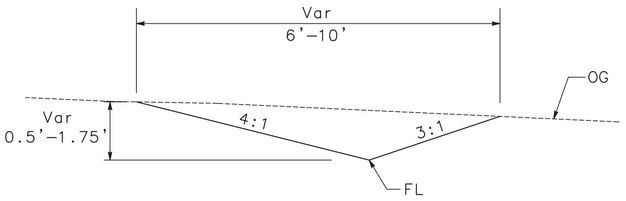

DITCH A
"EB" 100+50 TO 106+75

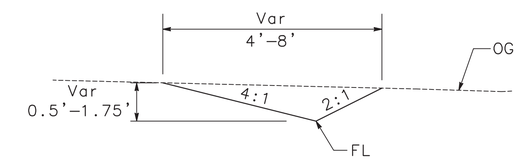

DITCH B
"EB" 106+75 TO 114+00

TYPE V-DITCH DETAIL

DRAINAGE DETAILS
NO SCALE

DD-2

STATE OF CALIFORNIA - DEPARTMENT OF TRANSPORTATION
Caltrans

CONSULTANT FUNCTIONAL SUPERVISOR: JAMES MARSHALL PANGBURN
CALCULATED-DESIGNED BY: E. WEEKS
CHECKED BY: J. PANGBURN
REVISED BY
DATE REVISED

LAST REVISION 00-00-00
DATE PLOTTED => $DATE
TIME PLOTTED => $TIME

PATH: V:\Chico-55-0131-SR32 Widening\CADD\Phase 2 - SR 99 to East Fork Mansfield Drain\
PLOT DATE: Nov 18, 2015-08:15:15am
CAD USER: kfriedrich

BORDER LAST REVISED 7/2/2010
USERNAME => $USER
DGN FILE => $REQUEST
RELATIVE BORDER SCALE IS IN INCHES 0 1 2 3
UNIT 0000
PROJECT NUMBER & PHASE 0313000246

Dist	COUNTY	ROUTE	POST MILES TOTAL PROJECT	SHEET No.	TOTAL SHEETS
03	But	32	10.1/10.5	38	126

11-6-15
REGISTERED CIVIL ENGINEER DATE

NOVEMBER 13, 2015
PLANS APPROVAL DATE

REGISTERED PROFESSIONAL ENGINEER
JAMES MARSHALL PANGBURN
No. 71445
Exp. 12/31/15
CIVIL
STATE OF CALIFORNIA

THE STATE OF CALIFORNIA OR ITS OFFICERS OR AGENTS SHALL NOT BE RESPONSIBLE FOR THE ACCURACY OR COMPLETENESS OF SCANNED COPIES OF THIS PLAN SHEET.

MARK THOMAS & CO., INC.
7300 FOLSOM BLVD STE 203
SACRAMENTO, CA 95826

CITY OF CHICO
CAPITAL PROJECT SERVICES
411 MAIN STREET
CHICO, CA 95927

NOTES:

1. ALL STEEL PLATES SHALL BE TREATED WITH NON-SLIP COATING.

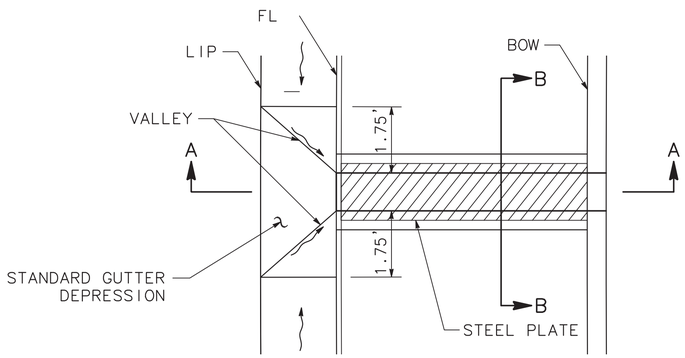

UNDER SIDEWALK DRAIN

NO SCALE

11 16 17 18 19

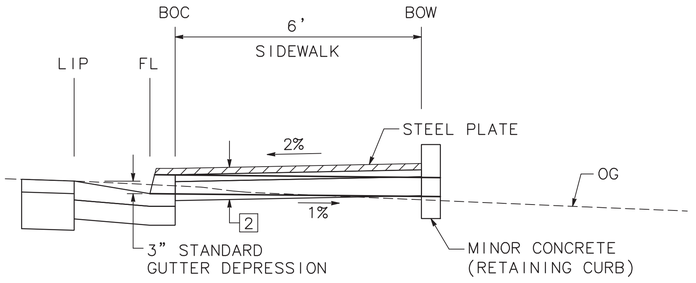

SECTION A-A

NO SCALE

APC ALLOWABLE PIPE MATERIAL

DESCRIPTION	CSP (0.138") (GALVANIZED)	CAP (0.064")	RCP
	SIZE	SIZE	SIZE
18"	18"	18"	18"
24"	24"	24"	24"

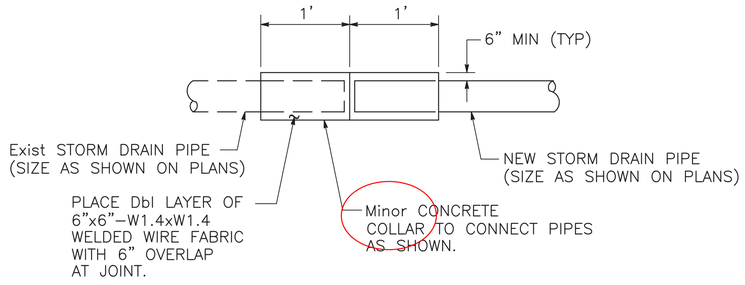

CONCRETE COLLAR CONNECTION DETAIL

"R2" 1512+38.96 22.76 Rt
NO SCALE

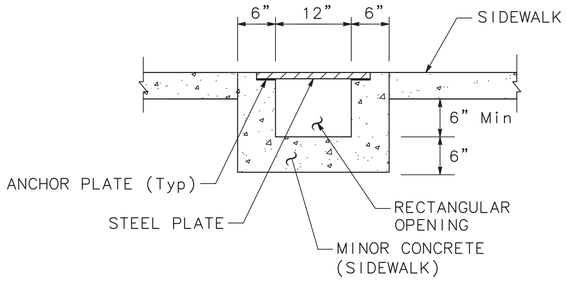

SECTION B-B

NO SCALE

DRAINAGE DETAILS

DD-3

STATE OF CALIFORNIA - DEPARTMENT OF TRANSPORTATION
Caltrans

CONSULTANT FUNCTIONAL SUPERVISOR: JAMES MARSHALL PANGBURN
CALCULATED-DESIGNED BY: E. WEEKS
CHECKED BY: J. PANGBURN
REVISED BY
DATE REVISED

PATH: V:\Chico-55-0131-SR32 Widening\CADD\Phase 2 - SR 99 to East Fork Mansfield Drain\
PLOT DATE: Nov 18, 2015-08:15:47am
CAD USER: kfriedrich

LAST REVISION 00-00-00
DATE PLOTTED => $DATE
TIME PLOTTED => $TIME

BORDER LAST REVISED 7/2/2010
USERNAME => $USER
DGN FILE => $REQUEST
RELATIVE BORDER SCALE IS IN INCHES 0 1 2 3
UNIT 0000
PROJECT NUMBER & PHASE 0313000246

DRAINAGE PLAN SHEET No.	DRAINAGE SYSTEM No. ⬡	DRAINAGE UNIT ◯	REMOVE CULVERT	REMOVE FES	REMOVE INLET	REMOVE PIPE	36" PRECAST CONCRETE PIPE INLET	HMA OD	MINOR CONCRETE (SIDEWALK)	MISC IRON AND STEEL	MINOR CONCRETE (GUTTER DEPRESSION)	FES		PIPES		72" PRECAST PIPE MANHOLE	RSP (BACKING No. 2, METHOD B)	ROCK SLOPE PROTECTION FABRIC (CLASS 8)	PRF (N)	CONCRETE BACKFILL (PIPE TRENCH)	DESCRIPTION	STATION
												18" AFES	18" Conc FES	18" APC	18" RCP						
			LF	EA	EA	LF	LF	SY	CY	LB	CY	EA	EA	LF	LF	LF	CY	SY	SY	CY		
D–1	1	a															2.29	10.50			RSP	
D–1	2	a															2.29	10.50			RSP	
D–1	3	a															0.17	1.78			RSP	
		b									1.20										CURB CUT SPILLWAY #1	
D–1	4	a															0.17	1.78			RSP	"C2" 556+89.28 16.54 Rt
		b									1.20										CURB CUT SPILLWAY #2	
D–1	5	a															0.17	1.78			RSP	"C2" 556+00 27.55 Rt
		b									1.20										CURB CUT SPILLWAY #3	
D–1	6	a															3.33	13.69			RSP	"C2" 555+04 28.00 Rt
D–1	7	a															4.44	17.47			RSP	
D–1	8	a															2.29	10.50			RSP	
		b											1								18" Conc FES	"C1" 553+10.48 51.50 Rt
		c		1																	REMOVE FES	
		d														85			24	3.98	18" x 85 RCP	"C1" 553+10.58 34.50 Lt to 553+10.48 51.50 Rt
		e	72																		REMOVE 18" RCP	
		f			1																REMOVE DI	
		g					2.70			112											DI (TYPE OCP)	"C1" 553+10.58 34.50 Lt
		h						5.81													HMA OD	"C1" 553+31.26 44.00 Rt
		i															1.67	8.03			RSP	
D–1	9																				NOT USED	
D–1	10	a															0.17	1.78			RSP	
		b									1.20										CURB CUT SPILLWAY #4	"C1" 556+50 26.06 Lt
D–1	11	a							1.80	175											STEEL PLATED SIDEWALK DRAIN	"FS" 101+57.40 29.00 Rt
D–1	12																				NOT USED	
SHEET TOTAL			72	1	1	0	2.70	5.81	1.80	287	4.80	0	1	0	85	0	16.99	77.81	24	3.98		

(N) – NOT A SEPARATE PAY ITEM. FOR INFORMATION ONLY.

Dist	COUNTY	ROUTE	POST MILES TOTAL PROJECT	SHEET No.	TOTAL SHEETS
03	But	32	10.1/10.5	39	126

11-6-15
REGISTERED CIVIL ENGINEER DATE

NOVEMBER 13, 2015
PLANS APPROVAL DATE

REGISTERED PROFESSIONAL ENGINEER
JAMES MARSHALL PANGBURN
No. 71445
Exp. 12/31/15
CIVIL
STATE OF CALIFORNIA

THE STATE OF CALIFORNIA OR ITS OFFICERS OR AGENTS SHALL NOT BE RESPONSIBLE FOR THE ACCURACY OR COMPLETENESS OF SCANNED COPIES OF THIS PLAN SHEET.

MARK THOMAS & CO., INC.
7300 FOLSOM BLVD STE 203
SACRAMENTO, CA 95826

CITY OF CHICO
CAPITAL PROJECT SERVICES
411 MAIN STREET
CHICO, CA 95927

DRAINAGE QUANTITIES
DQ-1

REVISED BY: E. WEEKS
DATE REVISED:
CALCULATED–DESIGNED BY: J. PANGBURN
CHECKED BY:
CONSULTANT FUNCTIONAL SUPERVISOR: JAMES MARSHALL PANGBURN

STATE OF CALIFORNIA – DEPARTMENT OF TRANSPORTATION
Caltrans

LAST REVISION 00-00-00 | DATE PLOTTED => $DATE | TIME PLOTTED => $TIME

BORDER LAST REVISED 7/2/2010 | USERNAME => $USER | DGN FILE => $REQUEST | RELATIVE BORDER SCALE IS IN INCHES 0 1 2 3 | UNIT 0000 | PROJECT NUMBER & PHASE 0313000246

PLOT DATE: Nov 18, 2015-08:18:11am CAD USER: kfriedrich
PATH: V:\Chico-55-0131-SR32 Widening\CADD\Phase 2 - SR 99 to East of Park and Ride\Drawing\sr32_DQ1-DQ3

DRAINAGE PLAN SHEET No.	DRAINAGE SYSTEM No. ⬡	DRAINAGE UNIT ◯	REMOVE CULVERT	REMOVE FES	REMOVE INLET	36" PRECAST CONCRETE PIPE INLET	HMA OD	MINOR CONCRETE (SIDEWALK)	MISC IRON AND STEEL	MINOR CONCRETE (GUTTER DEPRESSION)	FES		PIPES		72" PRECAST PIPE MANHOLE	RSP (BACKING No. 2, METHOD B)	ROCK SLOPE PROTECTION FABRIC (CLASS 8)	PRF (N)	CONCRETE BACKFILL (PIPE TRENCH)	DESCRIPTION	STATION
											18" AFES	18" Conc FES	18" APC	18" RCP							
			LF	EA	EA	LF	SY	CY	LB	CY	EA	EA	LF	LF	LF	CY	SY	SY	CY		
D-1	13	a														2.08	9.72			RSP	
		b		1																REMOVE FES	
		c									1									18" AFES	"WB" 101+61.90 53.51 Lt
		d	73																	REMOVE CULVERT (18" CMP)	
		e											73							18" x 73 APC	"WB" 101+61.90 53.51 Lt to 101+63.06 19.65 Rt
		f		1																REMOVE FES	
		g									1									18" AFES	"WB" 101+63.06 19.65 Rt
		h														2.29	10.50			RSP	
D-1	14	a													5.82						"WB" 103+93.83 54.00 Lt
		b												28							
		c										1									
		d														2.29					
D-2	15	a														2.29	10.50			RSP	
		b										1								18" Conc FES	"EB" 107+35.88 16.92 Lt
		c												64				24	3.90	18" x 64 RCP	"EB" 107+35.88 16.92 Lt to 107+36.37 57.08 Rt
		d										1								18" Conc FES	"EB" 107+36.37 57.08 Rt
		e														1.39	7.15			RSP	
D-1	16	a						1.34	175											STEEL PLATED SIDEWALK DRAIN	"WB" 96+50.00 5.22 Rt
D-1	17	a						1.34	175											STEEL PLATED SIDEWALK DRAIN	"WB" 97+20.00 5.21 Rt
D-1	18	a						1.34	175											STEEL PLATED SIDEWALK DRAIN	"WB" 98+00.00 4.39 Rt
D-1	19	a						1.34	175											STEEL PLATED SIDEWALK DRAIN	"WB" 99+00.00 4.00 Rt
D-1	20	a			1															REMOVE DI	"C2" 559+76.89
		b				9.06			112											DI (TYPE OCPI)	"C2" 559+76.89
		c											11							18" APC PIPE	
		d											165							18" APC PIPE	"C2" 559+76.89 TO "C2" 558+13.48
		e	165																	REMOVE CULVERT (18" PVC PIPE)	"C2" 559+76.89 TO "C2" 558+13.48
SHEET TOTAL			238	2	1	9.06		5.36	812		2	3	249	92	5.82	10.34	37.87	24	3.90		
DQ-1 SUBTOTAL			72	1	1	2.70	5.81	1.80	287	4.80		1				16.99	77.81	24	3.98		
DRAINAGE SUBTOTAL			310	3	2	11.76	5.81	7.16	1099	4.80	2	4	249	92	5.82	27.33	115.68		7.88		
BID TOTAL			310	3	2	11.76	**	*	1099	*	2	4	249	92	5.82	27.33	115.68	24	7.88		

**FOR PROJECT TOTAL, SEE SHEET Q-1
*FOR PROJECT TOTAL, SEE SHEET Q-3
(N) – NOT A SEPARATE PAY ITEM. FOR INFORMATION ONLY.

Dist	COUNTY	ROUTE	POST MILES TOTAL PROJECT	SHEET No.	TOTAL SHEETS
03	But	32	10.1/10.5	40	126

11-6-15
REGISTERED CIVIL ENGINEER DATE

NOVEMBER 13, 2015
PLANS APPROVAL DATE

JAMES MARSHALL PANGBURN No. 71445 Exp. 12/31/15 CIVIL — REGISTERED PROFESSIONAL ENGINEER — STATE OF CALIFORNIA

THE STATE OF CALIFORNIA OR ITS OFFICERS OR AGENTS SHALL NOT BE RESPONSIBLE FOR THE ACCURACY OR COMPLETENESS OF SCANNED COPIES OF THIS PLAN SHEET.

MARK THOMAS & CO., INC.
7300 FOLSOM BLVD STE 203
SACRAMENTO, CA 95826

CITY OF CHICO
CAPITAL PROJECT SERVICES
411 MAIN STREET
CHICO, CA 95927

DRAINAGE QUANTITIES
DQ-2

REVISED BY: E. WEEKS
DATE REVISED:
CALCULATED-DESIGNED BY: J. PANGBURN
CHECKED BY:
CONSULTANT FUNCTIONAL SUPERVISOR: JAMES MARSHALL PANGBURN
STATE OF CALIFORNIA – DEPARTMENT OF TRANSPORTATION
Caltrans

LAST REVISION 00-00-00 | DATE PLOTTED => $DATE | TIME PLOTTED => $TIME

PLOT DATE: Nov 18, 2015-08:18:40am CAD USER: kfriedrich
PATH: V:\Chico-55-0131-SR32 Widening\CADD\Phase 2 - SR 99 to East of Park and Ride\Drawing\sr32_DQ1-DQ3

BORDER LAST REVISED 7/2/2010 | USERNAME => $USER | DGN FILE => $REQUEST | RELATIVE BORDER SCALE IS IN INCHES 0 1 2 3 | UNIT 0000 | PROJECT NUMBER & PHASE 0313000246

NOTES:

1. FOR ACCURATE RIGHT OF WAY DATA, CONTACT RIGHT OF WAY ENGINEERING AT THE DISTRICT OFFICE.
2. ELEVATIONS SHOWN REFER TO THE TOP OF PIPE OR CONDUIT, UNLESS OTHERWISE STATED.
3. UTILITY OWNERSHIP ON THIS PROJECT OR AS SHOWN:
   GAS – PACIFIC GAS & ELECTRIC (PG&E)
   ELECTRICAL – PACIFIC GAS & ELECTRIC (PG&E)
   WATER – CALIFORNIA WATER SERVICE (CWS)
   SEWER – CITY OF CHICO (C.O.C)
   STORM DRAIN – CITY OF CHICO (C.O.C)
   TELEPHONE – AMERICAN TELEPHONE AND TELEGRAPH (AT&T)
   CABLE TV – COMCAST
4. LOCATIONS AND DEPTHS OF EXISTING CITY OWNED FACILITIES SHOWN ON THESE PLANS ARE APPROXIMATE. THE CONTRACTOR SHALL VERIFY THE EXISTENCE, LOCATION AND DEPTH OF ALL CITY OWNED FACILITIES PRIOR TO CONSTRUCTION. THE CITY OF CHICO IS NOT A MEMBER OF UNDERGROUND SERVICE ALERT (USA). THE CONTRACTOR SHALL CALL THE CITY OF CHICO AT (530) 894–4200 AND REQUEST MARKING OF CITY OWNED FACILITIES AT LEAST 72 HOURS (3 WORKING DAYS) PRIOR TO CONSTRUCTION.
5. LOCATIONS OF UTILITY FACILITIES (NON–CITY) SHOWN ON THESE PLANS ARE APPROXIMATE AND SHALL BE VERIFIED BY THE CONTRACTOR BY CONTACTING THE REGIONAL NOTIFICATION CENTER (USA) AT LEAST 48 HOURS (2 WORKING DAYS) PRIOR TO CONSTRUCTION.

LEGEND:

—e———(oh)—	ELECTRICAL OVERHEAD (AERIAL) – EXISTING
-g—-—g—-—	GAS – EXISTING
—-s—-—-s—-—	SEWER – EXISTING
—-sd—-—-sd—-—	STORM DRAIN – EXISTING
—-SD—-—-SD—-—	STORM DRAIN – PROPOOSED
—w———w———	WATER – EXISTING
—-t———(oh)—	AT&T – EXISTING
⬠ #	UTILITY LOCATION

ABBREVIATIONS:

CWS – CALIFORNIA WATER SERVICE
PG&E – PACIFIC GAS AND ELECTRIC
C.O.C. – CITY OF CHICO
CATV – CABLE TV (COMCAST)

Dist	COUNTY	ROUTE	POST MILES TOTAL PROJECT	SHEET No.	TOTAL SHEETS
03	But	32	10.1/10.5	41	126

11-6-15
REGISTERED CIVIL ENGINEER DATE

NOVEMBER 13, 2015
PLANS APPROVAL DATE

JAMES MARSHALL PANGBURN No. 71445 Exp. 12/31/15 CIVIL — REGISTERED PROFESSIONAL ENGINEER — STATE OF CALIFORNIA

THE STATE OF CALIFORNIA OR ITS OFFICERS OR AGENTS SHALL NOT BE RESPONSIBLE FOR THE ACCURACY OR COMPLETENESS OF SCANNED COPIES OF THIS PLAN SHEET.

MARK THOMAS & CO., INC.
7300 FOLSOM BLVD STE 203
SACRAMENTO, CA 95826

CITY OF CHICO
CAPITAL PROJECT SERVICES
411 MAIN STREET
CHICO, CA 95927

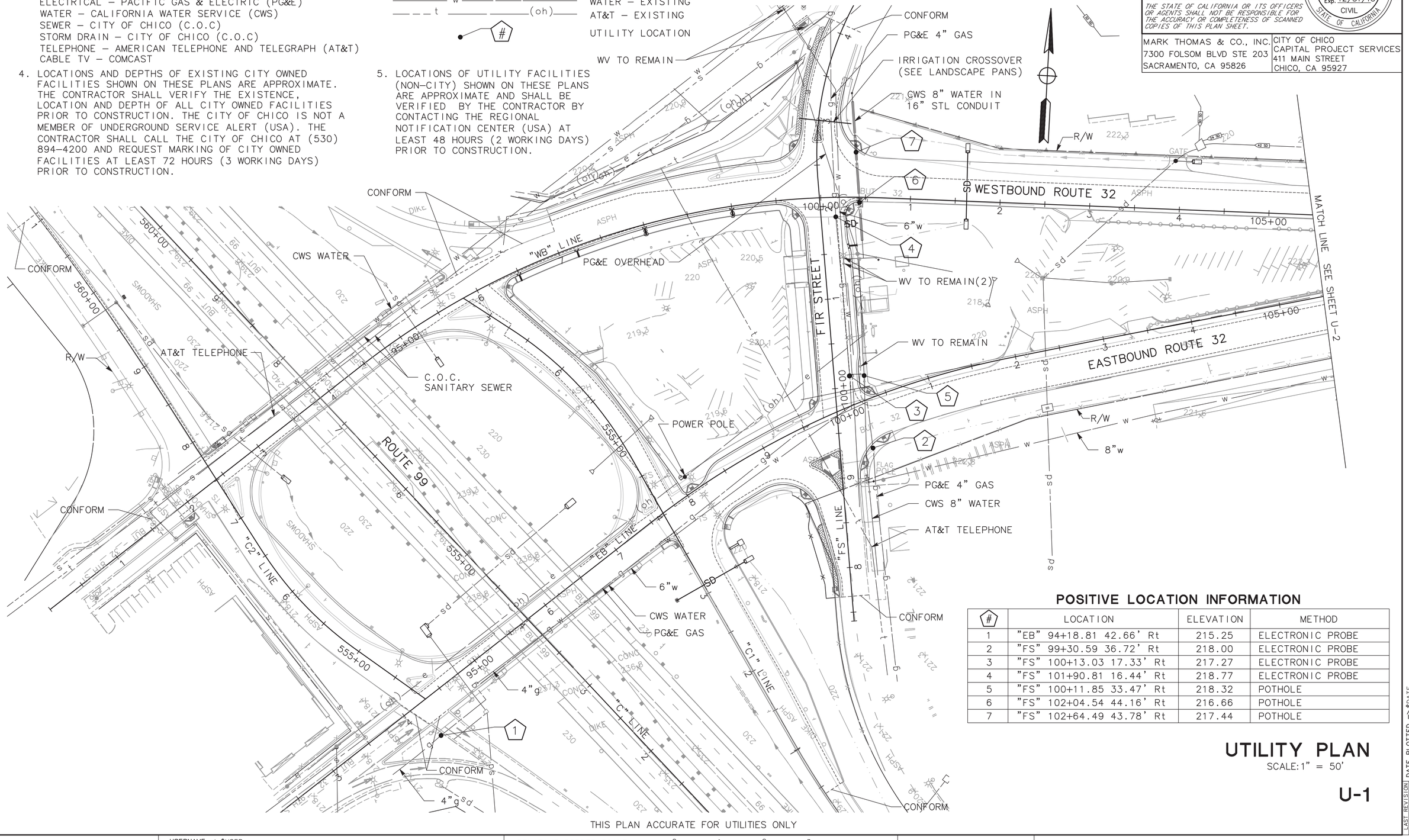

POSITIVE LOCATION INFORMATION

#	LOCATION	ELEVATION	METHOD
1	"EB" 94+18.81 42.66' Rt	215.25	ELECTRONIC PROBE
2	"FS" 99+30.59 36.72' Rt	218.00	ELECTRONIC PROBE
3	"FS" 100+13.03 17.33' Rt	217.27	ELECTRONIC PROBE
4	"FS" 101+90.81 16.44' Rt	218.77	ELECTRONIC PROBE
5	"FS" 100+11.85 33.47' Rt	218.32	POTHOLE
6	"FS" 102+04.54 44.16' Rt	216.66	POTHOLE
7	"FS" 102+64.49 43.78' Rt	217.44	POTHOLE

UTILITY PLAN

SCALE: 1" = 50'

U-1

THIS PLAN ACCURATE FOR UTILITIES ONLY

REVISED BY	DATE REVISED
E. WEEKS	J. PANGBURN

CALCULATED–DESIGNED BY
CHECKED BY

CONSULTANT FUNCTIONAL SUPERVISOR: JAMES MARSHALL PANGBURN

STATE OF CALIFORNIA – DEPARTMENT OF TRANSPORTATION

Caltrans

LAST REVISION 00-00-00 | DATE PLOTTED => $DATE | TIME PLOTTED => $TIME

PATH: V:\Chico-55-0131-SR32 Widening\CADD\Phase 2 - SR 99 to East of Park and Ride\Drawing\sr32_U1-U2 PLOT DATE: Nov 18, 2015-08:20:50am CAD USER: kfriedrich

BORDER LAST REVISED 7/2/2010 | USERNAME => $USER | DGN FILE => $REQUEST | RELATIVE BORDER SCALE IS IN INCHES 0 1 2 3 | UNIT 0000 | PROJECT NUMBER & PHASE 0313000246

Dist	COUNTY	ROUTE	POST MILES TOTAL PROJECT	SHEET No.	TOTAL SHEETS
03	But	32	10.1/10.5	42	126

11-6-15
REGISTERED CIVIL ENGINEER DATE

NOVEMBER 13, 2015
PLANS APPROVAL DATE

REGISTERED PROFESSIONAL ENGINEER
JAMES MARSHALL PANGBURN
No. 71445
Exp. 12/31/15
CIVIL
STATE OF CALIFORNIA

THE STATE OF CALIFORNIA OR ITS OFFICERS OR AGENTS SHALL NOT BE RESPONSIBLE FOR THE ACCURACY OR COMPLETENESS OF SCANNED COPIES OF THIS PLAN SHEET.

MARK THOMAS & CO., INC.
7300 FOLSOM BLVD STE 203
SACRAMENTO, CA 95826

CITY OF CHICO
CAPITAL PROJECT SERVICES
411 MAIN STREET
CHICO, CA 95927

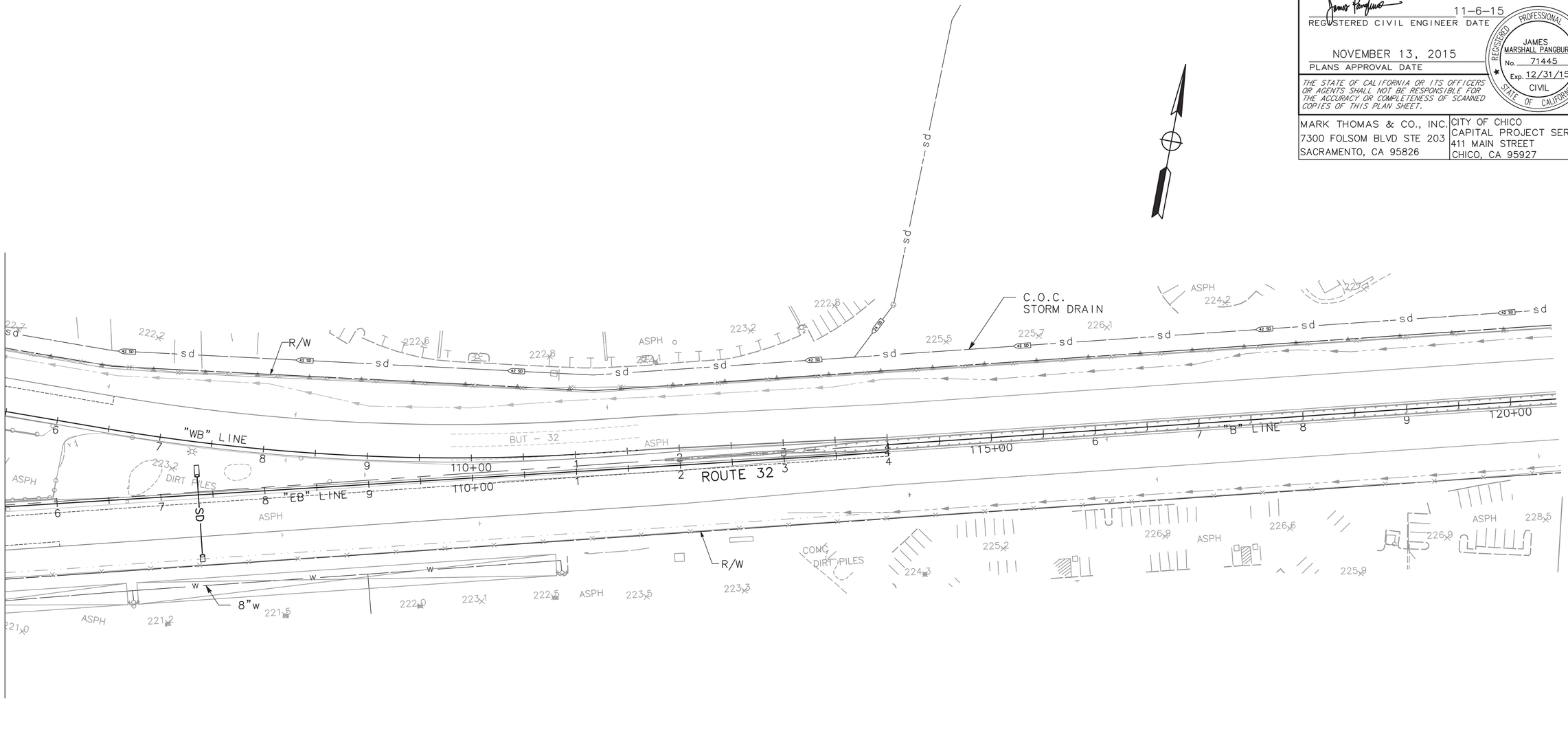

UTILITY PLAN

SCALE: 1" = 50'

U-2

THIS PLAN ACCURATE FOR UTILITIES ONLY

STATE OF CALIFORNIA - DEPARTMENT OF TRANSPORTATION
Caltrans

CONSULTANT FUNCTIONAL SUPERVISOR: JAMES MARSHALL PANGBURN
CALCULATED-DESIGNED BY: E. WEEKS
CHECKED BY: J. PANGBURN
REVISED BY
DATE REVISED

PATH: V:\Chico-55-0131-SR32 Widening\CADD\Phase 2 - SR 99 to East Fork Mansfield Drawing\ PLOT DATE: Nov 18, 2015-08:21:30am CAD USER: kfriedrich

LAST REVISION 00-00-00
DATE PLOTTED => $DATE
TIME PLOTTED => $TIME

BORDER LAST REVISED 7/2/2010
USERNAME => $USER
DGN FILE => $REQUEST
RELATIVE BORDER SCALE IS IN INCHES 0 1 2 3
UNIT 0000
PROJECT NUMBER & PHASE 0313000246

Dist	COUNTY	ROUTE	POST MILES TOTAL PROJECT	SHEET No.	TOTAL SHEETS
03	But	32	10.1/10.5	43	126

11-6-15
REGISTERED CIVIL ENGINEER DATE

NOVEMBER 13, 2015
PLANS APPROVAL DATE

REGISTERED PROFESSIONAL ENGINEER
JAMES MARSHALL PANGBURN
No. 71445
Exp. 12/31/15
CIVIL
STATE OF CALIFORNIA

THE STATE OF CALIFORNIA OR ITS OFFICERS OR AGENTS SHALL NOT BE RESPONSIBLE FOR THE ACCURACY OR COMPLETENESS OF SCANNED COPIES OF THIS PLAN SHEET.

MARK THOMAS & CO., INC.
7300 FOLSOM BLVD STE 203
SACRAMENTO, CA 95826

CITY OF CHICO
CAPITAL PROJECT SERVICES
411 MAIN STREET
CHICO, CA 95927

LEGEND

CONSTRUCTION AREA SIGN SINGLE POST

PCMS–PORTABLE CHANGEAGLE MESSAGE SIGN

NOTES

1. LOCATION OF CONSTRUCTION AREA SIGNS SHOWN ARE APPROXIMATE. EXACT SIGN LOCATION TO BE DETERMINED BY THE ENGINEER.
2. SEE TH SHEETS FOR ADDITIONAL CONSTRUCTION AREA SIGNS.
3. TWO CHANGEABLE MESSAGE SIGNS TO BE LOCATED AS DIRECTED BY THE ENGINEER.

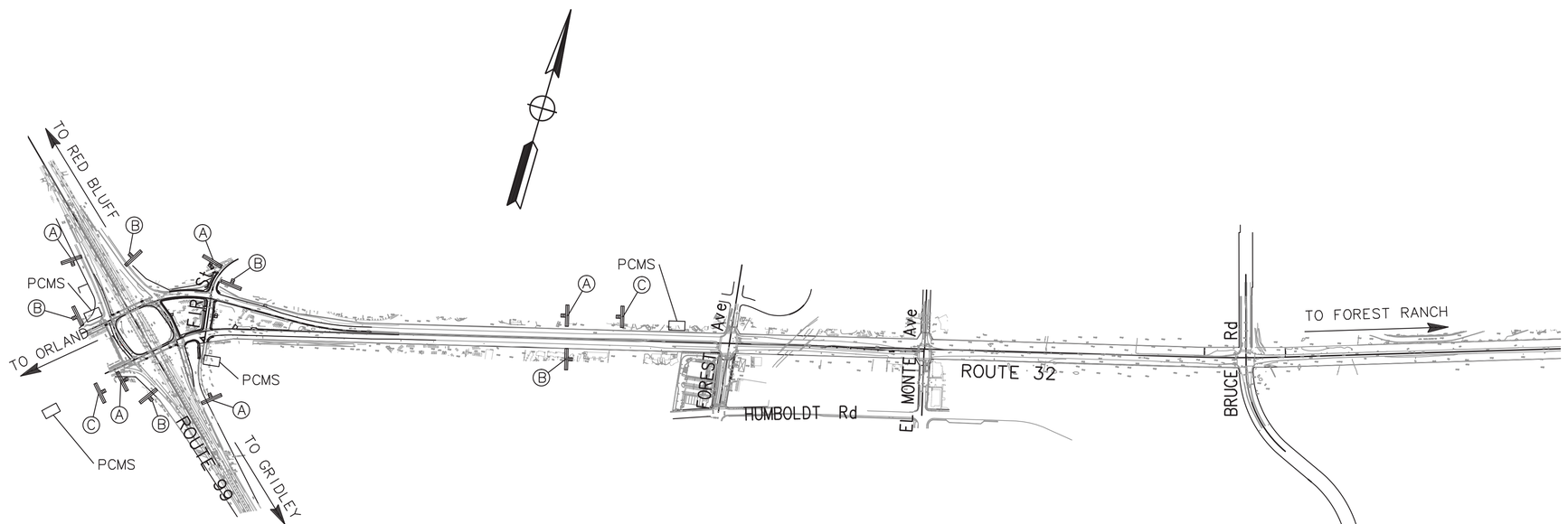

STATIONARY MOUNTED CONSTRUCTION AREA SIGNS

SIGN LETTER	SIGN CODE FEDERAL	SIGN CODE CALIFORNIA	PANEL SIZE (IN)	SIGN MESSAGE	No. OF POST & SIZE	No. OF SIGNS (EA)
Ⓐ	W20-1	C23	48x48	ROAD WORK AHEAD	1-6X6	5
Ⓑ	G20-2	C14	36x18	END ROAD WORK	1-4X4	5
Ⓒ	----	C40(Mod)	48x36	TRAFFIC FINES DOUBLED IN WORK ZONES	1-4X6	2
TOTAL						12

C40(Mod) <CA>

TRAFFIC FINES DOUBLED IN WORK ZONES

4" D

48"x36"

RETRO REFLECTIVE WHITE BACKGROUND WITH BLACK LEGEND AND BORDER.

CONSTRUCTION AREA SIGNS

SCALE: 1" = 200'

CS-1

REVISED BY | DATE REVISED
E. WEEKS | J. PANGBURN
CALCULATED-DESIGNED BY | CHECKED BY
CONSULTANT FUNCTIONAL SUPERVISOR: JAMES MARSHALL PANGBURN
STATE OF CALIFORNIA - DEPARTMENT OF TRANSPORTATION
Caltrans

LAST REVISION 00-00-00 | DATE PLOTTED => $DATE | TIME PLOTTED => $TIME

BORDER LAST REVISED 7/2/2010 | USERNAME => $USER | DGN FILE => $REQUEST | RELATIVE BORDER SCALE IS IN INCHES 0 1 2 3 | UNIT 0000 | PROJECT NUMBER & PHASE 0313000246

PATH: V:\Chico-55-0131-SR32 Widening\CADD\Phase 2 - SR 99 to East of Park and Ride\Drawing\sr32_CS1 PLOT DATE: Nov 18, 2015-08:22:52am CAD USER: kfriedrich

Dist	COUNTY	ROUTE	POST MILES TOTAL PROJECT	SHEET No.	TOTAL SHEETS
03	But	32	10.1/10.5	44	126

REGISTERED CIVIL ENGINEER 11-6-15 DATE

NOVEMBER 13, 2015
PLANS APPROVAL DATE

REGISTERED PROFESSIONAL ENGINEER JAMES MARSHALL PANGBURN No. 71445 Exp. 12/31/15 CIVIL STATE OF CALIFORNIA

THE STATE OF CALIFORNIA OR ITS OFFICERS OR AGENTS SHALL NOT BE RESPONSIBLE FOR THE ACCURACY OR COMPLETENESS OF SCANNED COPIES OF THIS PLAN SHEET.

MARK THOMAS & CO., INC.
7300 FOLSOM BLVD STE 203
SACRAMENTO, CA 95826

CITY OF CHICO
CAPITAL PROJECT SERVICES
411 MAIN STREET
CHICO, CA 95927

LEGEND:

STAGE 1 ROADWAY CONSTRUCTION

CONSTRUCTION ACTIVITIES (STAGE 2):

Stage 1

1. WIDEN SR 99 RAMP COUPLETS.
2. WIDEN EAST SIDE OF FIR STREET.
3. WIDEN NORTH SIDE OF EASTBOUND ROUTE 32.
4. WIDEN SOUTHBOUND EXIT RAMP.
5. WIDEN SHOULDER ALONG EASTBOUND SR 32.
6. CONSTRUCT WESTBOUND ROADWAY ALONG SR 32 AND SOUTHBOUND ROADWAY ALONG FIR STREET.
7. INSTALL CURB RAMPS AND CURBS ALONG EAST SIDE OF FIR STREET.
8. ROUGH GRADE EMBANKMENT.

VEHICULAR TRAFFIC THIS STAGE:

1. MAINTAIN TRAFFIC WITH EXISTING SIGNAL OPERATIONS.
2. PLACE TEMPORARY RAILING (TYPE K), TEMPORARY PAVEMENT DELINEATION, CHANNELIZERS, ETC. PER TRAFFIC HANDLING PLANS

Space

PEDESTRIAN TRAFFIC THIS STAGE:

1. MAINTAIN PEDESTRIAN TRAFFIC ALONG WEST SIDE OF FIR STREET.
2. MAITAIN PEDESTRIAN ACCESS TO TEMPORARY BUS TOP LOCATION.

East 8th and East 9th Street.

NOTES:

1. REFER TO SPECIAL PROVISIONS FOR LIMITATIONS OF WORK PERIODS.
2. FOR ADDITIONAL CONSTRUCTION AREA SIGNS, SEE CONSTRUCTION AREA SIGN PLAN.
3. SEE ELECTRICAL SHEETS FOR TEMPORARY SIGNALS.
4. TEMPORARY RAILING (TYPE K) SHALL BE PINNED WHEN CLEARANCE FROM BACK OF RAILING TO WORKZONE IS LESS THAN 2'.

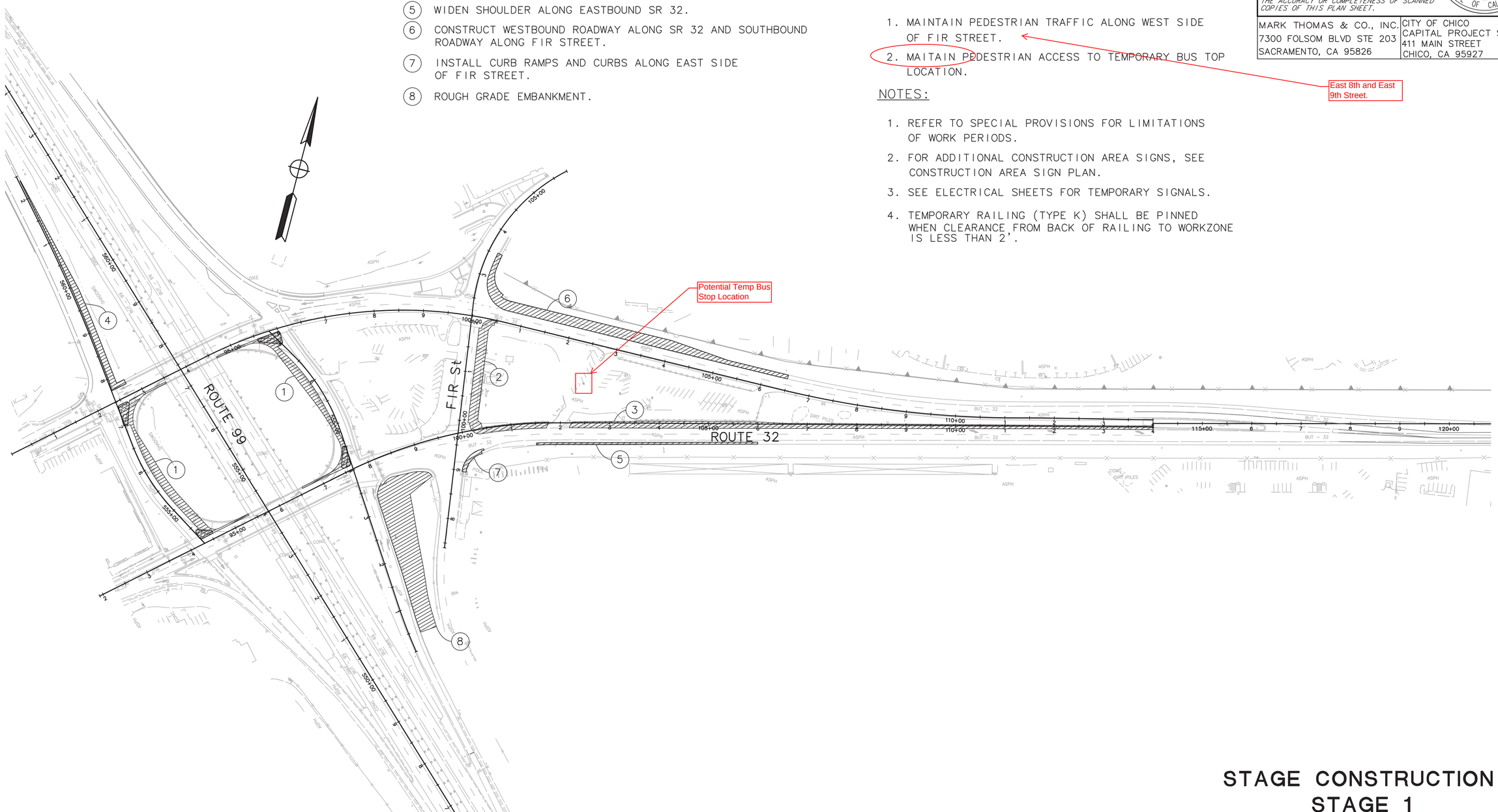

STAGE CONSTRUCTION
STAGE 1

SCALE: 1" = 100'

SC-1

STATE OF CALIFORNIA – DEPARTMENT OF TRANSPORTATION
Caltrans

CONSULTANT FUNCTIONAL SUPERVISOR: JAMES MARSHALL PANGBURN
CALCULATED-DESIGNED BY: E. WEEKS
CHECKED BY: J. PANGBURN
REVISED BY
DATE REVISED

PATH: V:\Chico-55-0131-SR32 Widening\CADD\Phase 2 - SR 99 to East Fir Ave\Plans\Stage 2\Drawing\ PLOT DATE: Nov 18, 2015-08:23:58am CAD USER: kfriedrich

LAST REVISION 00-00-00 DATE PLOTTED => $DATE TIME PLOTTED => $TIME

BORDER LAST REVISED 7/2/2010 | USERNAME => $USER DGN FILE => $REQUEST | RELATIVE BORDER SCALE IS IN INCHES 0 1 2 3 | UNIT 0000 | PROJECT NUMBER & PHASE 0313000246

Dist	COUNTY	ROUTE	POST MILES TOTAL PROJECT	SHEET No.	TOTAL SHEETS
03	But	32	10.1/10.5	45	126

REGISTERED CIVIL ENGINEER — 11-6-15

PLANS APPROVAL DATE — NOVEMBER 13, 2015

JAMES MARSHALL PANGBURN No. 71445 Exp. 12/31/15 CIVIL — REGISTERED PROFESSIONAL ENGINEER — STATE OF CALIFORNIA

THE STATE OF CALIFORNIA OR ITS OFFICERS OR AGENTS SHALL NOT BE RESPONSIBLE FOR THE ACCURACY OR COMPLETENESS OF SCANNED COPIES OF THIS PLAN SHEET.

MARK THOMAS & CO., INC.
7300 FOLSOM BLVD STE 203
SACRAMENTO, CA 95826

CITY OF CHICO
CAPITAL PROJECT SERVICES
411 MAIN STREET
CHICO, CA 95927

LEGEND:

STAGE 2 ROADWAY CONSTRUCTION

CONSTRUCTION ACTIVITIES: (Stage 2)

1. CONSTRUCT WESTBOUND ROADWAY ALONG SR 32 AND SOUTHBOUND ROADWAY ALONG FIR STREET.
2. CONSTRUCT CURB, GUTTER AND SIDEWALK IMPROVEMENTS AT PARK AND RIDE LOT.
3. WIDEN NORTHBOUND EXIT RAMP, REPLACE CURB RAMPS AND CURBS ALONG FIR STREET.

VEHICULR TRAFFIC THIS STAGE:

1. MAINTAIN TRAFFIC WITH EXISTING SIGNAL OPERATIONS.
2. PLACE TEMPORARY RAILING (TYPE K), TEMPORARY PAVEMENT DELINEATION, CHANNELIZERS, ETC. PER TRAFFIC HANDLING PLANS

PEDESTRIAN TRAFFIC THIS STAGE:

1. MOVE PEDESTRIAN TRAFFIC TO EAST SIDE OF FIR STREET.

Maintain Pedestrian access along East 9th Street.

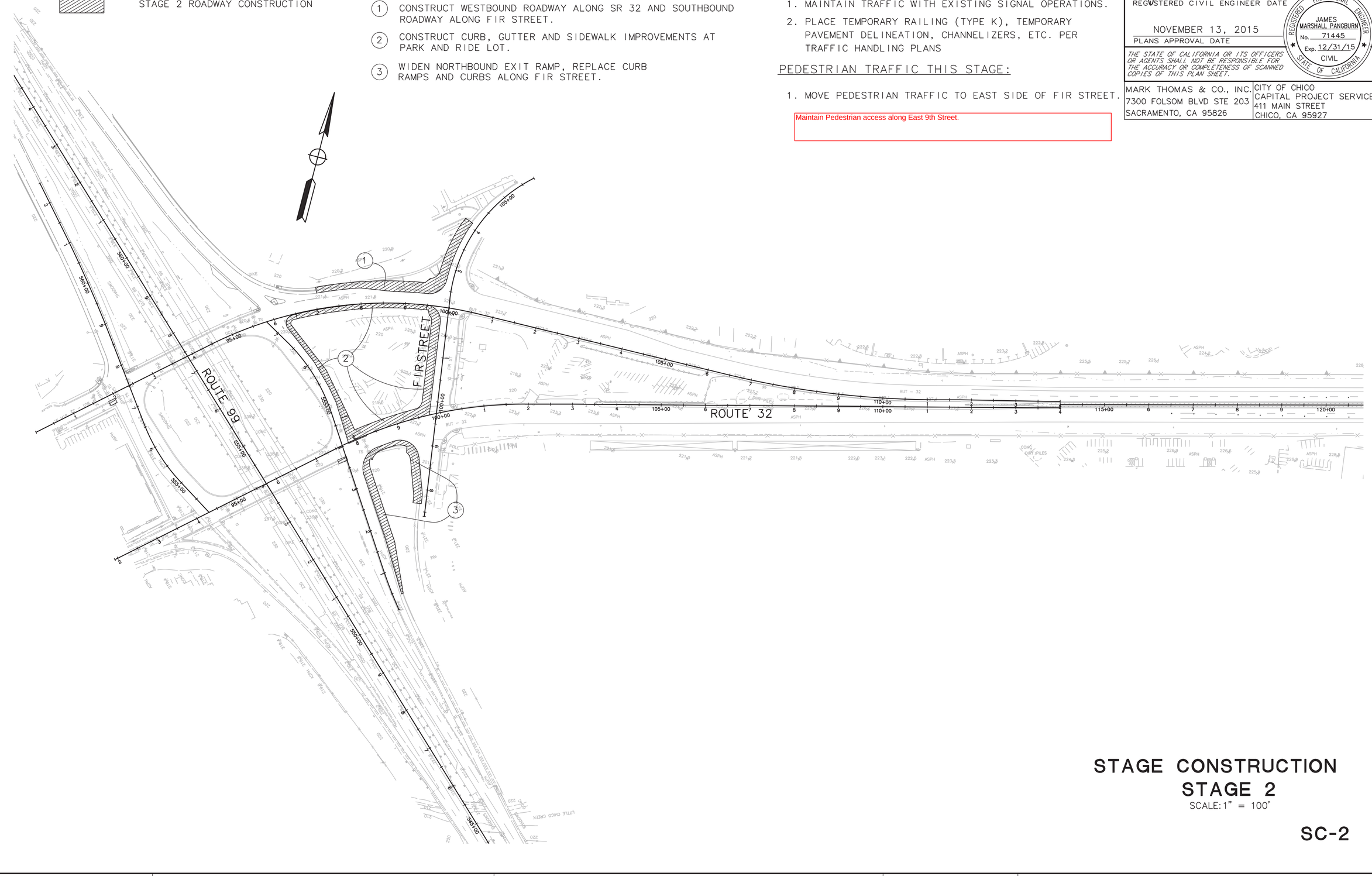

STAGE CONSTRUCTION
STAGE 2
SCALE: 1" = 100'

SC-2

STATE OF CALIFORNIA – DEPARTMENT OF TRANSPORTATION
Caltrans

CONSULTANT FUNCTIONAL SUPERVISOR: JAMES MARSHALL PANGBURN
CALCULATED–DESIGNED BY: E. WEEKS
CHECKED BY: J. PANGBURN
REVISED BY
DATE REVISED

LAST REVISION | DATE PLOTTED => $DATE | 00-00-00 | TIME PLOTTED => $TIME

PATH: V:\Chico-55-0131-SR32 Widening\CADD\Phase 2 - SR 99 to East of Park and Ride\Drawing\sr32_SC2 PLOT DATE: Nov 18, 2015-08:25:53am CAD USER: kfriedrich

BORDER LAST REVISED 7/2/2010 | USERNAME => $USER | DGN FILE => $REQUEST | RELATIVE BORDER SCALE IS IN INCHES 0 1 2 3 | UNIT 0000 | PROJECT NUMBER & PHASE 0313000246

Dist	COUNTY	ROUTE	POST MILES TOTAL PROJECT	SHEET No.	TOTAL SHEETS
03	But	32	10.1/10.5	46	126

11-6-15
REGISTERED CIVIL ENGINEER DATE

NOVEMBER 13, 2015
PLANS APPROVAL DATE

REGISTERED PROFESSIONAL ENGINEER
JAMES MARSHALL PANGBURN
No. 71445
Exp. 12/31/15
CIVIL
STATE OF CALIFORNIA

THE STATE OF CALIFORNIA OR ITS OFFICERS OR AGENTS SHALL NOT BE RESPONSIBLE FOR THE ACCURACY OR COMPLETENESS OF SCANNED COPIES OF THIS PLAN SHEET.

MARK THOMAS & CO., INC.
7300 FOLSOM BLVD STE 203
SACRAMENTO, CA 95826

CITY OF CHICO
CAPITAL PROJECT SERVICES
411 MAIN STREET
CHICO, CA 95927

CONSTRUCTION ACTIVITIES (STAGE 3):

1. PLACE FINAL LIFT HMA (TYPE A).
2. PLACE OGFC.
3. PLACE FINAL STRIPING/SIGNAGE.
4. ERECT SIGN STRUCTURES.
5. PLACE BRIDGE MOUNTED SIGNS.

TRAFFIC STAGE 3:

1. SHIFT TRAFFIC TO FINAL PAVEMENT
2. PERFORM FINAL LIFTS WITH MOVING LANE CLOSURES.
3. TEMPORARY RAILING (TYPE K) SHALL BE PINNED WHEN CLEARANCE FROM BACK OF RAILING TO WORKZONE IS LESS THAN 2'.

NOTES:

1. REFER TO SPECIAL PROVISIONS FOR LIMITATIONS OF WORK PERIODS.
2. FOR ADDITIONAL CONSTRUCTION AREA SIGNS, SEE CONSTRUCTION AREA SIGN PLAN.
3. CONTRACTOR TO MAINTAIN PEDESTRIAN ACCESS AT ALL TIMES.

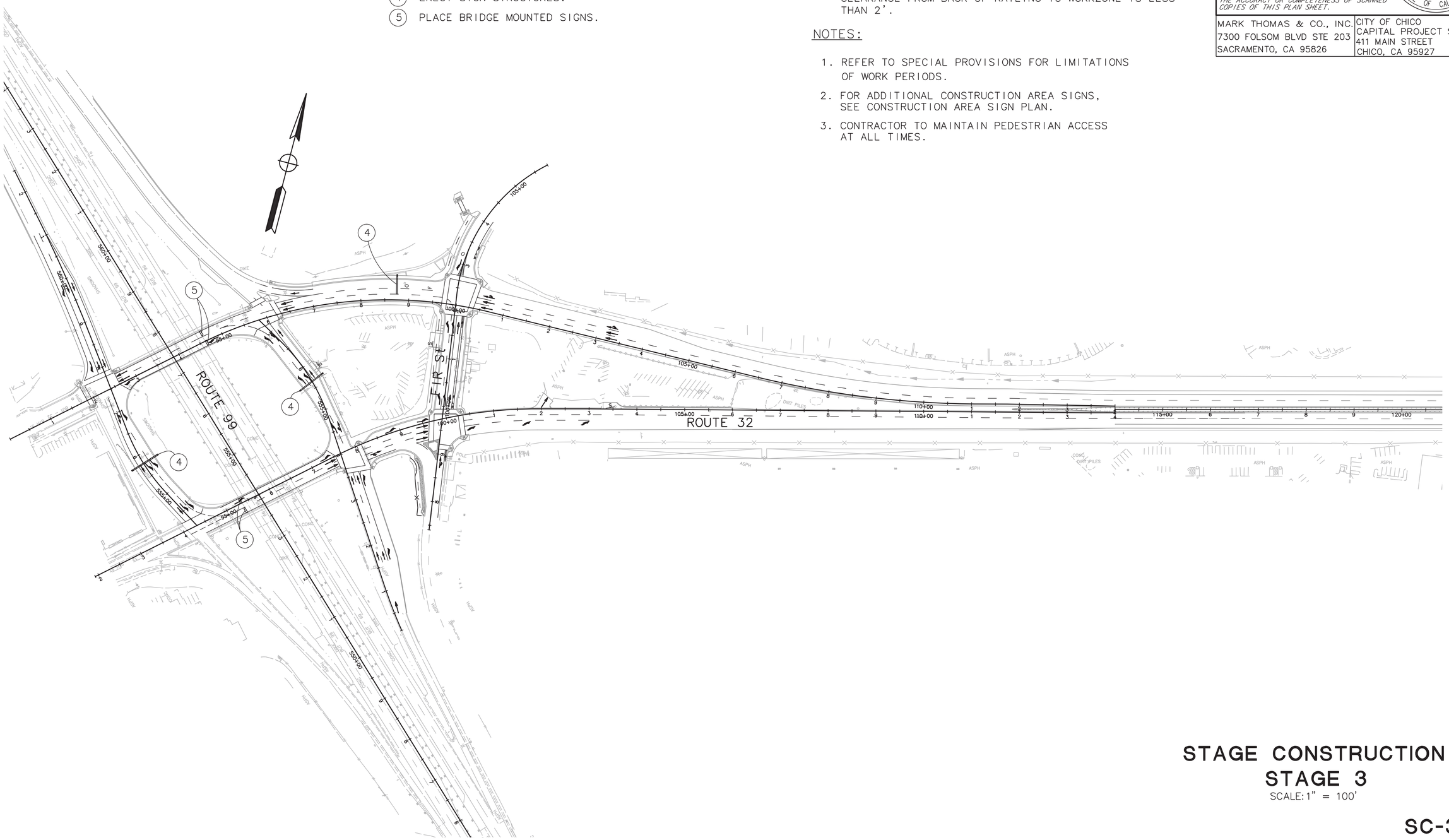

STAGE CONSTRUCTION
STAGE 3

SCALE: 1" = 100'

SC-3

STATE OF CALIFORNIA - DEPARTMENT OF TRANSPORTATION
Caltrans

CONSULTANT FUNCTIONAL SUPERVISOR: JAMES MARSHALL PANGBURN
CALCULATED-DESIGNED BY: E. WEEKS
CHECKED BY: J. PANGBURN
REVISED BY
DATE REVISED

PATH: V:\Chico-55-0131-SR32 Widening\CADD\Phase 2 - SR 99 to East Fork\Plans\Sheets\Drawing\ PLOT DATE: Nov 18, 2015-08:27:08am CAD USER: kfriedrich

LAST REVISION 00-00-00 DATE PLOTTED => $DATE TIME PLOTTED => $TIME

BORDER LAST REVISED 7/2/2010 | USERNAME => $USER DGN FILE => $REQUEST | RELATIVE BORDER SCALE IS IN INCHES 0 1 2 3 | UNIT 0000 | PROJECT NUMBER & PHASE 0313000246

Dist	COUNTY	ROUTE	POST MILES TOTAL PROJECT	SHEET No.	TOTAL SHEETS
03	But	32	10.1/10.5	47	126

11-6-15
REGISTERED CIVIL ENGINEER DATE

NOVEMBER 13, 2015
PLANS APPROVAL DATE

REGISTERED PROFESSIONAL ENGINEER — JAMES MARSHALL PANGBURN — No. 71445 — Exp. 12/31/15 — CIVIL — STATE OF CALIFORNIA

THE STATE OF CALIFORNIA OR ITS OFFICERS OR AGENTS SHALL NOT BE RESPONSIBLE FOR THE ACCURACY OR COMPLETENESS OF SCANNED COPIES OF THIS PLAN SHEET.

MARK THOMAS & CO., INC.
7300 FOLSOM BLVD STE 203
SACRAMENTO, CA 95826

CITY OF CHICO
CAPITAL PROJECT SERVICES
411 MAIN STREET
CHICO, CA 95927

NOTES:

1. ALL EXISTING ROADSIDE SIGNS SHALL REMAIN UNLESS OTHERWISE NOTED.
2. CONTRACTOR SHALL UTILIZE FLAGGING OR OTHER TRAFFIC CONTROL METHODS WHILE REMOVING/PAVING TRAFFIC ISLANDS.

LEGEND:

- STAGE 1 ROADWAY CONSTRUCTION
- 38 — Temp TRAFFIC STRIPE (PAINT) DETAIL
- XW — Temp CROSSWALK (12" PAINTED Pvmt MARKING)
- CHANNELIZER (SURFACE MOUNTED)
- Temp RAILING (TYPE K)
- LIMIT of Temp TRAFFIC STRIPE DETAIL
- DIRECTION OF TRAFFIC (THIS STAGE)
- Temp TYPE III BARRICADE
- RELOCATE ROADSIDE SIGN
- ROADSIDE SIGN TO REMAIN
- REMOVE SIGN
- INSTALL CONSTRUCTION ROADSIDE SIGN
- Temp ARROW (TYPE III) (L)
- Temp ARROW (TYPE III) (R)
- Temp ARROW (TYPE V)
- Temp ARROW (TYPE VI)
- REMOVE Exist STRIPE
- Const AREA SIGN(SINGLE POST)

NON-STANDARD ABBREVIATION:

AP ANGLE POINT
ATCCS ALTERNATIVE Temp CRASH CUSHION SYSTEM
RPM REMOVE PAVEMENT MARKING

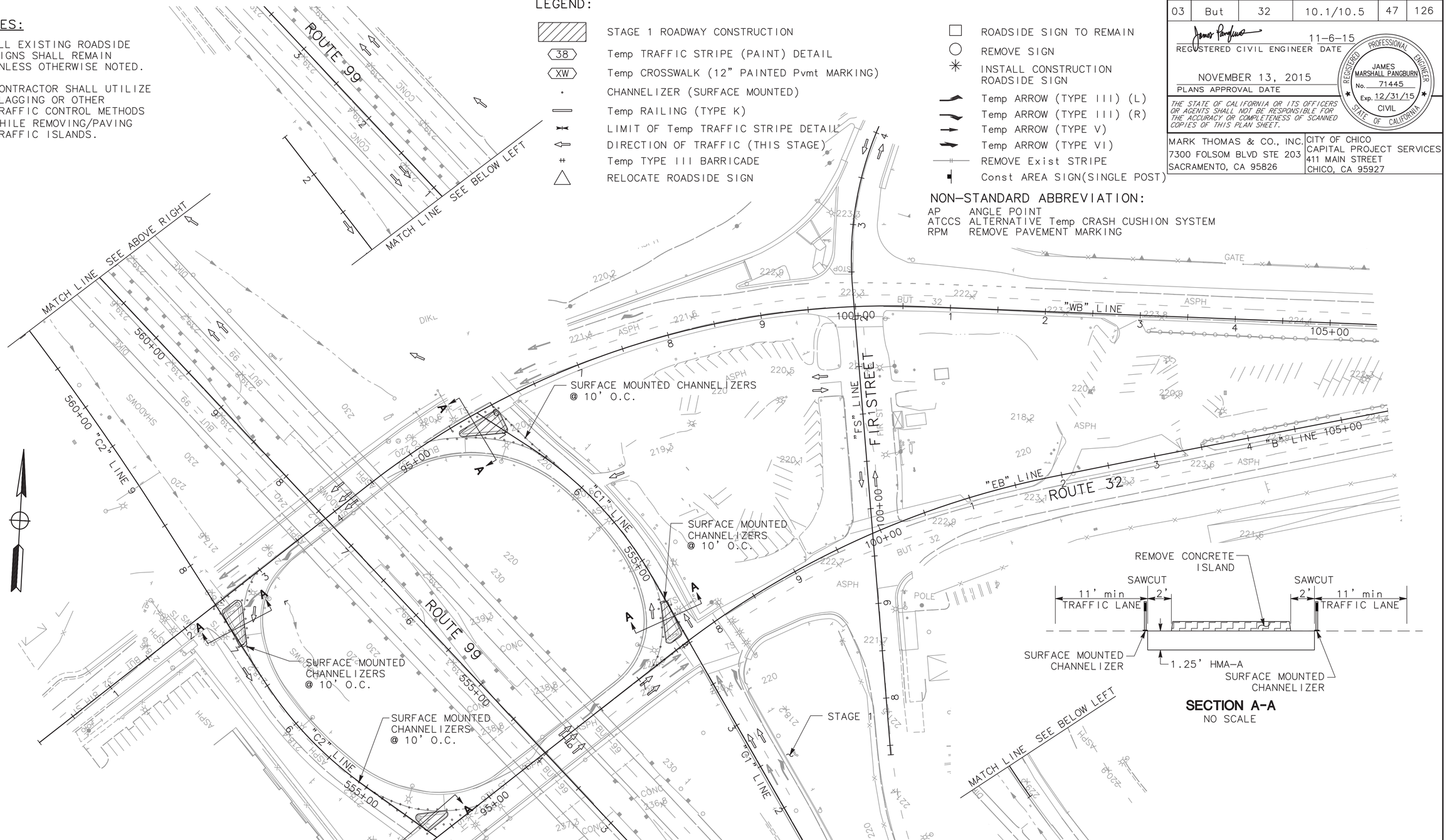

SECTION A-A
NO SCALE

TRAFFIC HANDLING STAGE 1

SCALE: 1" = 50'

TH-1

THIS PLAN ACCURATE FOR TRAFFIC HANDLING ONLY

STATE OF CALIFORNIA – DEPARTMENT OF TRANSPORTATION
CONSULTANT FUNCTIONAL SUPERVISOR: JAMES MARSHALL PANGBURN
CALCULATED-DESIGNED BY: E. WEEKS
CHECKED BY: J. PANGBURN
REVISED BY
DATE REVISED

LAST REVISION | DATE PLOTTED => $DATE | 00-00-00 | TIME PLOTTED => $TIME

PATH: V:\Chico-55-0131-SR32 Widening\CADD\Phase 2 - SR 99 to East of Park and Ride\Drawing\sr32_TH1(stage 1) PLOT DATE: Nov 18, 2015-08:30:39am CAD USER: kfriedrich

BORDER LAST REVISED 7/2/2010
USERNAME => $USER
DGN FILE => $REQUEST
RELATIVE BORDER SCALE IS IN INCHES 0 1 2 3
UNIT 0000
PROJECT NUMBER & PHASE 0313000246

NOTES:

1. ALL EXISTING ROADSIDE SIGNS SHALL REMAIN UNLESS OTHERWISE NOTED.
2. TEMPORARY RAILING(TYPE K) SHALL BE PINNED WHEN CLEARANCE FROM BACK OF RAILING TO WORKZONE IS LESS THAN 2'.
3. CONTRACTOR SHALL MINIMIZE CONSTRUCTION DURATION THROUGH DRIVEWAYS. SEE SPECIAL PROVISIONS.
4. PEDESTRIAN ACCESS TO BE MAINTAINED DURING CONSTRUCTION.

Dist	COUNTY	ROUTE	POST MILES TOTAL PROJECT	SHEET No.	TOTAL SHEETS
03	But	32	10.1/10.5	48	126

11-6-15
REGISTERED CIVIL ENGINEER DATE

JAMES MARSHALL PANGBURN No. 71445 Exp. 12/31/15 CIVIL — REGISTERED PROFESSIONAL ENGINEER — STATE OF CALIFORNIA

NOVEMBER 13, 2015
PLANS APPROVAL DATE

THE STATE OF CALIFORNIA OR ITS OFFICERS OR AGENTS SHALL NOT BE RESPONSIBLE FOR THE ACCURACY OR COMPLETENESS OF SCANNED COPIES OF THIS PLAN SHEET.

MARK THOMAS & CO., INC.
7300 FOLSOM BLVD STE 203
SACRAMENTO, CA 95826

CITY OF CHICO
CAPITAL PROJECT SERVICES
411 MAIN STREET
CHICO, CA 95927

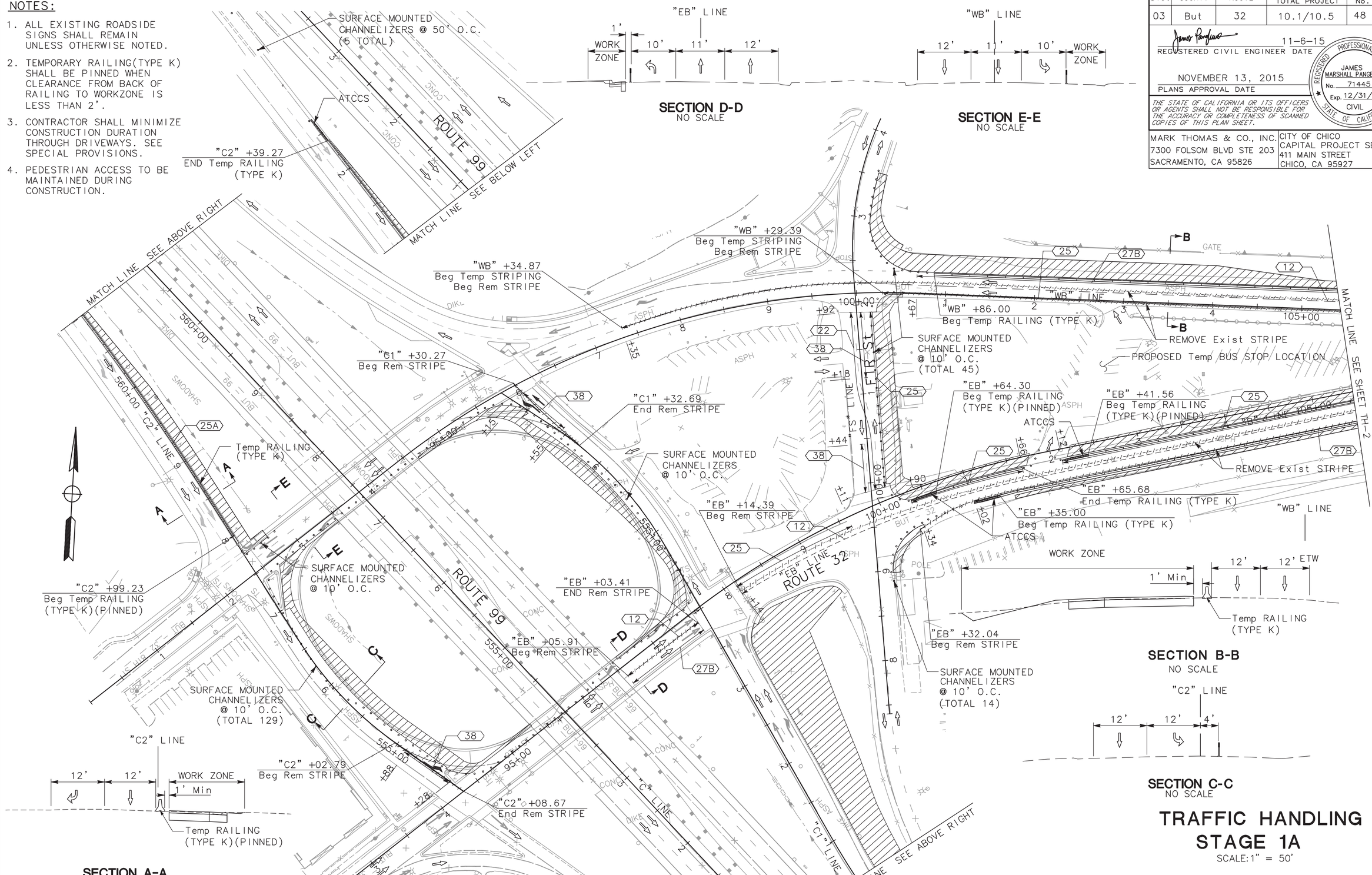

SECTION A-A
NO SCALE

SECTION B-B
NO SCALE

SECTION C-C
NO SCALE

SECTION D-D
NO SCALE

SECTION E-E
NO SCALE

TRAFFIC HANDLING STAGE 1A

SCALE:1" = 50'

TH-2

THIS PLAN ACCURATE FOR TRAFFIC HANDLING ONLY

STATE OF CALIFORNIA – DEPARTMENT OF TRANSPORTATION | CONSULTANT FUNCTIONAL SUPERVISOR: JAMES MARSHALL PANGBURN | CALCULATED–DESIGNED BY: E. WEEKS | CHECKED BY: J. PANGBURN | REVISED BY | DATE REVISED

PATH: V:\Chico-55-0131-SR32 Widening\CADD\Phase 2 - SR 99 to East\DETAILS\Maintenance Detour Drawings\TH-2 (Stage 1A).dgn PLOT DATE: Nov 18, 2015–08:32:14am CAD USER: kfriedrich

LAST REVISION DATE PLOTTED => $DATE 00-00-00 TIME PLOTTED => $TIME

BORDER LAST REVISED 7/2/2010 | USERNAME => $USER | DGN FILE => $REQUEST | RELATIVE BORDER SCALE IS IN INCHES 0 1 2 3 | UNIT 0000 | PROJECT NUMBER & PHASE 0313000246

Dist	COUNTY	ROUTE	POST MILES TOTAL PROJECT	SHEET No.	TOTAL SHEETS
03	But	32	10.1/10.5	49	126

11-6-15
REGISTERED CIVIL ENGINEER DATE

NOVEMBER 13, 2015
PLANS APPROVAL DATE

REGISTERED PROFESSIONAL ENGINEER
JAMES MARSHALL PANGBURN
No. 71445
Exp. 12/31/15
CIVIL
STATE OF CALIFORNIA

THE STATE OF CALIFORNIA OR ITS OFFICERS OR AGENTS SHALL NOT BE RESPONSIBLE FOR THE ACCURACY OR COMPLETENESS OF SCANNED COPIES OF THIS PLAN SHEET.

MARK THOMAS & CO., INC.
7300 FOLSOM BLVD STE 203
SACRAMENTO, CA 95826

CITY OF CHICO
CAPITAL PROJECT SERVICES
411 MAIN STREET
CHICO, CA 95927

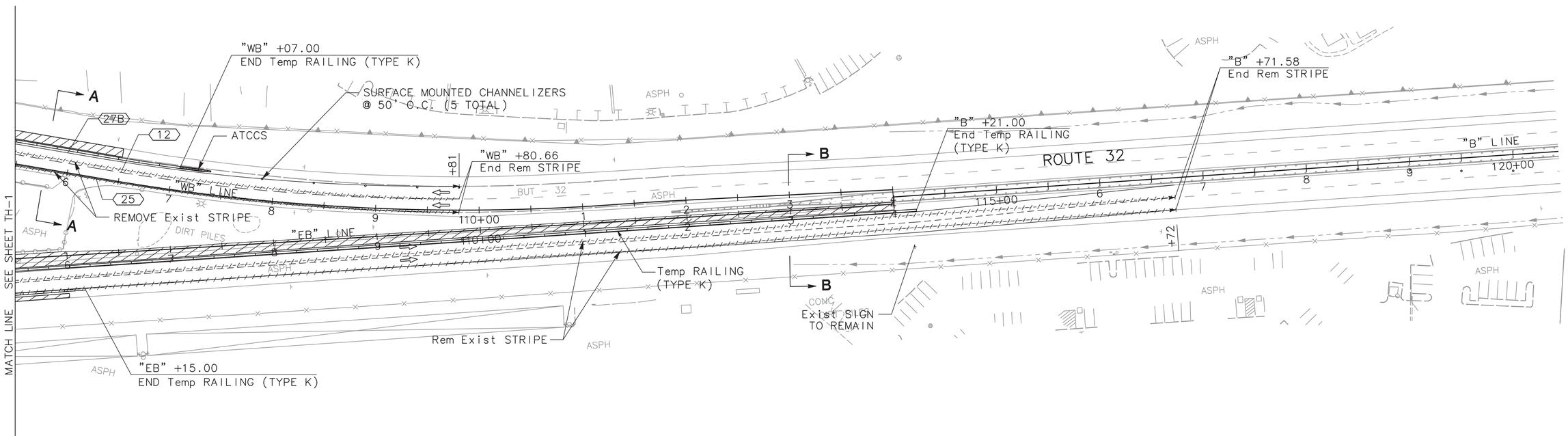

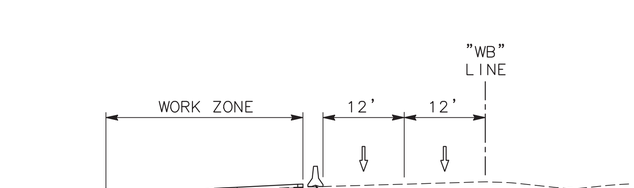

SECTION A-A
NO SCALE

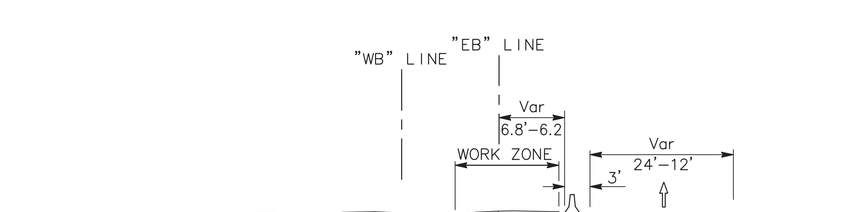

SECTION B-B
NO SCALE

TRAFFIC HANDLING
STAGE 1A
SCALE: 1" = 50'

TH-3

THIS PLAN ACCURATE FOR TRAFFIC HANDLING ONLY

STATE OF CALIFORNIA - DEPARTMENT OF TRANSPORTATION
Caltrans

CONSULTANT FUNCTIONAL SUPERVISOR: JAMES MARSHALL PANGBURN
CALCULATED-DESIGNED BY: E. WEEKS
CHECKED BY: J. PANGBURN
REVISED BY
DATE REVISED

LAST REVISION 00-00-00
DATE PLOTTED => $DATE
TIME PLOTTED => $TIME

PATH: V:\Chico-55-0131-SR32 Widening\CADD\Phase 2 - SR 99 to East\Plans\Bridge\Drawings\Stage 1A) PLOT DATE: Nov 18, 2015-08:32:51am CAD USER: kfriedrich

BORDER LAST REVISED 7/2/2010
USERNAME => $USER
DGN FILE => $REQUEST
RELATIVE BORDER SCALE IS IN INCHES 0 1 2 3
UNIT 0000
PROJECT NUMBER & PHASE 0313000246

Dist	COUNTY	ROUTE	POST MILES TOTAL PROJECT	SHEET No.	TOTAL SHEETS
03	But	32	10.1/10.5	50	126

11-6-15
REGISTERED CIVIL ENGINEER DATE

JAMES MARSHALL PANGBURN No. 71445 Exp. 12/31/15 CIVIL — REGISTERED PROFESSIONAL ENGINEER — STATE OF CALIFORNIA

NOVEMBER 13, 2015
PLANS APPROVAL DATE

THE STATE OF CALIFORNIA OR ITS OFFICERS OR AGENTS SHALL NOT BE RESPONSIBLE FOR THE ACCURACY OR COMPLETENESS OF SCANNED COPIES OF THIS PLAN SHEET.

MARK THOMAS & CO., INC.
7300 FOLSOM BLVD STE 203
SACRAMENTO, CA 95826

CITY OF CHICO
CAPITAL PROJECT SERVICES
411 MAIN STREET
CHICO, CA 95927

NOTES:

1. TEMPORARY RAILING (TYPE K) SHALL BE PINNED WHEN CLEARANCE FROM BACK OF RAILING TO WORKZONE IS LESS THAN 2'
2. CONTRACTOR SHALL MINIMIZE CONSTRUCTION DURATION THROUGH DRIVEWAYS. SEE SPECIAL PROVISIONS.
3. SEE PD SHEETS FOR FINAL STRIPING DETAILS

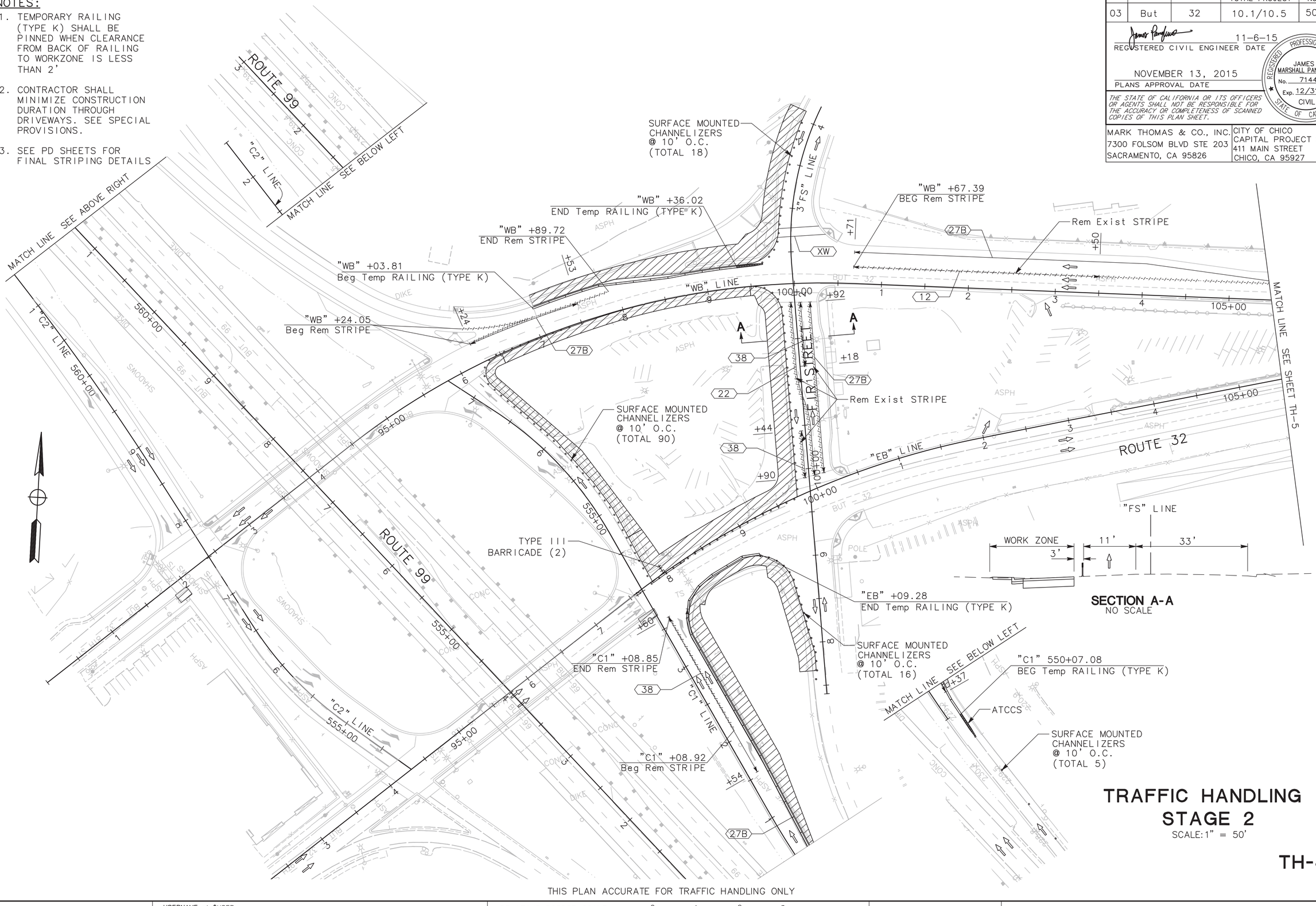

TRAFFIC HANDLING STAGE 2

SCALE:1" = 50'

TH-4

THIS PLAN ACCURATE FOR TRAFFIC HANDLING ONLY

REVISED BY	DATE REVISED

CALCULATED-DESIGNED BY	CHECKED BY
E. WEEKS	J. PANGBURN

CONSULTANT FUNCTIONAL SUPERVISOR: JAMES MARSHALL PANGBURN

STATE OF CALIFORNIA - DEPARTMENT OF TRANSPORTATION
Caltrans

LAST REVISION | DATE PLOTTED => $DATE | TIME PLOTTED => $TIME
00-00-00

PATH: V:\Chico-55-0131-SR32 Widening\CADD\Phase 2 - SR 99 to East\Traffic\Maintenance\TH-4 (Stage 2).dgn PLOT DATE: Nov 18, 2015-08:36:59am CAD USER: kfriedrich

BORDER LAST REVISED 7/2/2010 | USERNAME => $USER | DGN FILE => $REQUEST | RELATIVE BORDER SCALE IS IN INCHES 0 1 2 3 | UNIT 0000 | PROJECT NUMBER & PHASE 0313000246

Dist	COUNTY	ROUTE	POST MILES TOTAL PROJECT	SHEET No.	TOTAL SHEETS
03	But	32	10.1/10.5	51	126

11-6-15
REGISTERED CIVIL ENGINEER DATE

JAMES MARSHALL PANGBURN
No. 71445
Exp. 12/31/15
CIVIL
REGISTERED PROFESSIONAL ENGINEER
STATE OF CALIFORNIA

NOVEMBER 13, 2015
PLANS APPROVAL DATE

THE STATE OF CALIFORNIA OR ITS OFFICERS OR AGENTS SHALL NOT BE RESPONSIBLE FOR THE ACCURACY OR COMPLETENESS OF SCANNED COPIES OF THIS PLAN SHEET.

MARK THOMAS & CO., INC.
7300 FOLSOM BLVD STE 203
SACRAMENTO, CA 95826

CITY OF CHICO
CAPITAL PROJECT SERVICES
411 MAIN STREET
CHICO, CA 95927

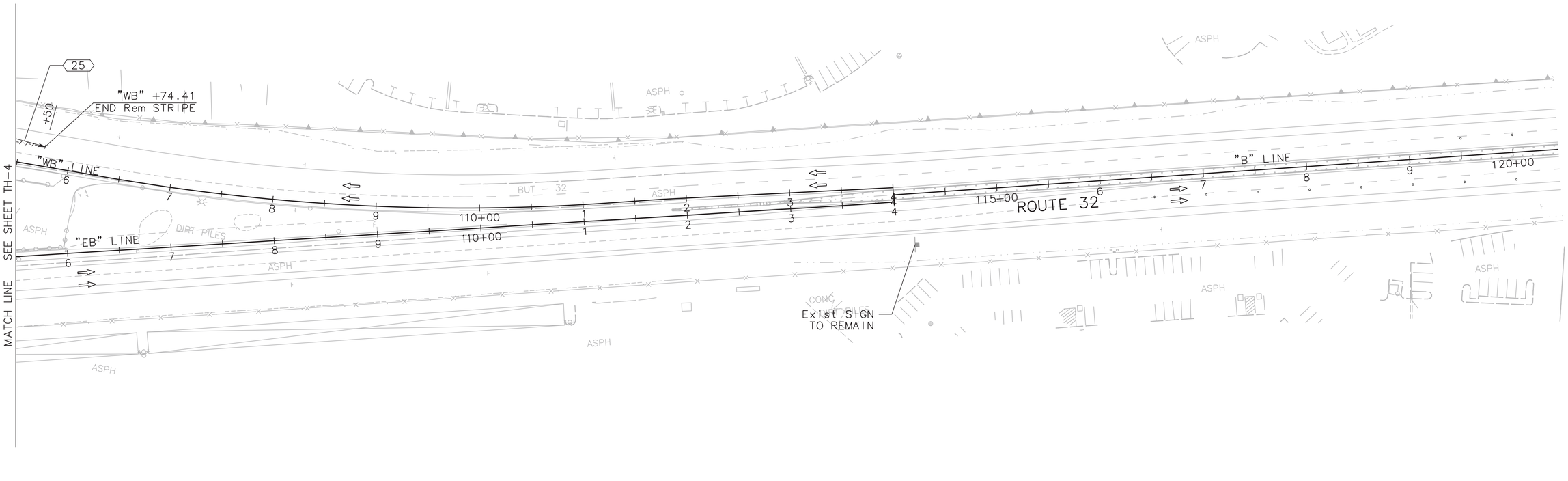

TRAFFIC HANDLING
STAGE 2
SCALE: 1" = 50'

TH-5

THIS PLAN ACCURATE FOR TRAFFIC HANDLING ONLY

STATE OF CALIFORNIA – DEPARTMENT OF TRANSPORTATION	CONSULTANT FUNCTIONAL SUPERVISOR	CALCULATED–DESIGNED BY	E. WEEKS	REVISED BY	
Caltrans	JAMES MARSHALL PANGBURN	CHECKED BY	J. PANGBURN	DATE REVISED	

LAST REVISION 00-00-00
DATE PLOTTED => $DATE
TIME PLOTTED => $TIME

BORDER LAST REVISED 7/2/2010
USERNAME => $USER
DGN FILE => $REQUEST
RELATIVE BORDER SCALE IS IN INCHES 0 1 2 3
UNIT 0000
PROJECT NUMBER & PHASE 0313000246

PATH: V:\Chico-55-0131-SR32 Widening\CADD\Phase 2 - SR 99 to East\FUTURE\Maint Rte TH\Maint Rte TH5(stage 2) PLOT DATE: Nov 18, 2015-08:37:35am CAD USER: kfriedrich

Dist	COUNTY	ROUTE	POST MILES TOTAL PROJECT	SHEET No.	TOTAL SHEETS
03	But	32	10.1/10.5	52	126

11-6-15
REGISTERED CIVIL ENGINEER DATE

JAMES MARSHALL PANGBURN
No. 71445
Exp. 12/31/15
REGISTERED PROFESSIONAL ENGINEER
CIVIL
STATE OF CALIFORNIA

NOVEMBER 13, 2015
PLANS APPROVAL DATE

THE STATE OF CALIFORNIA OR ITS OFFICERS OR AGENTS SHALL NOT BE RESPONSIBLE FOR THE ACCURACY OR COMPLETENESS OF SCANNED COPIES OF THIS PLAN SHEET.

MARK THOMAS & CO., INC.
7300 FOLSOM BLVD STE 203
SACRAMENTO, CA 95826

CITY OF CHICO
CAPITAL PROJECT SERVICES
411 MAIN STREET
CHICO, CA 95927

TEMPORARY PAVEMENT DELINEATION

STAGE	STATION	DETAIL No. / ITEM	LENGTH	TRAFFIC STRIPE (PAINT)	PAVEMENT MARKING (PAINT)	PAVEMENT MARKER		
						TYPE D	TYPE G	TYPE H
			LF	LF	SF	EA	EA	EA
1	"WB" 97+34.85 TO "WB" 109+80.66	12	1249	1249			27	
	"WB" 100+87.39 TO "WB" 109+80.66	25	910	910				20
	"EB" 96+55.19 TO "EB" 97+54.37	12	100	100			3	
	"EB" 96+55.19 TO "EB" 97+54.37	27B	99	99				
	"EB" 98+13.91 TO "EB" 99+66.49	25	146	146			5	
	"EB" 98+14.40 TO "B" 116+71.58	12	1849	1849			40	
	"EB" 101+02.31 TO "B" 116+71.58	27B	1567	1567				
	"EB" 102+11.58 TO "EB" 101+65.64	25	130	130			4	
	"EB" 102+11.58 TO "B" 101+65.64	25	1461	1461			32	
	"C1" 556+55.26 TO "C1" 557+14.50	38	60	60	42		3	
	"C2" 554+88.02 TO "C2" 554+28.02	38	60	60	42		3	
	"FS" 99+89.69 TO "FS" 100+43.90	38	54	54			3	
	"FS" 99+93.64 TO "FS" 101+90.83	25	197	197			6	
	"FS" 99+91.54 TO "FS" 101+92.37	22	202	202		10		
	"FS" 101+17.90 TO "FS" 101+91.64	38	54	54			3	
SUBTOTAL				8138	84	10	129	20
2	"WB" 100+67.39 TO "WB" 105+74.41	27B	508	508				
	"WB" 100+67.39 TO "WB" 103+50.00	12	283	283			7	
	"WB" 96+24.05 TO "WB" 97+52.52	27B	132	132				
	"C1" 551+54.36 TO "C1" 553+59.80	38	205	205			10	
	"C1" 550+37.61 TO "C1" 553+56.62	25	321	321				8
	"FS" 101+92.42 TO "FS" 101+17.90	38	74	74			5	
	"FS" 101+92.22 TO "FS" 99+92.09	22	202	202		10		
	"FS" 100+43.90 TO "FS" 99+90.06	38	54	54			3	
	"FS" 99+94.23 TO "FS" 101+90.75	27B	197	197				
SUBTOTAL				1976		10	25	8
BID TOTAL				10114	84	20	154	28
							202	

TEMPORARY RAILING (TYPE K)

STAGE	LOCATION	Temp RAIL (TYPE K)
		LF
1	"EB" 100+64.30 TO "EB" 101+65.68	100
	"C2" 557+99.23 TO "C2" 562+39.27	440
	"EB" 101+35.00 TO "EB" 106+15.00	480
	"EB" 102+41.56 TO "EB" 114+21.00	1180
	"WB" 100+86.00 TO "WB" 107+07.00	620
	SUBTOTAL	2820
2	"C1" 550+07.00 TO "EB" 99+09.28	460
	"WB" 97+03.80 TO "WB" 97+36.02	240
	SUBTOTAL	700
BID TOTAL		3520

TYPE III BARRICADE

STAGE	LOCATION	BARRICADE (TYPE III)
		EA
2	"EB" 98+00.00	2
	SUBTOTAL	2
BID TOTAL		2

TRAFFIC HANDLING QUANTITIES
THQ-1

REVISED BY	DATE REVISED

CALCULATED-DESIGNED BY	CHECKED BY
E. WEEKS	J. PANGBURN

CONSULTANT FUNCTIONAL SUPERVISOR: JAMES MARSHALL PANGBURN

STATE OF CALIFORNIA - DEPARTMENT OF TRANSPORTATION

Caltrans

PATH: V:\Chico-55-0131-SR32 Widening\CADD\Phase 2 - SR 99 to East\Final\Signal02_THQ.dgn
CAD USER: kfriedrich
PLOT DATE: Nov 18, 2015-08:39:17am

LAST REVISION
DATE PLOTTED => $DATE
TIME PLOTTED => $TIME
00-00-00

BORDER LAST REVISED 7/2/2010
USERNAME => $USER
DGN FILE => $REQUEST
RELATIVE BORDER SCALE IS IN INCHES 0 1 2 3
UNIT 0000
PROJECT NUMBER & PHASE 0313000246

Dist	COUNTY	ROUTE	POST MILES TOTAL PROJECT	SHEET No.	TOTAL SHEETS
03	But	32	10.1/10.5	53	126

11-6-15
REGISTERED CIVIL ENGINEER DATE

NOVEMBER 13, 2015
PLANS APPROVAL DATE

JAMES MARSHALL PANGBURN No. 71445 Exp. 12/31/15 CIVIL — REGISTERED PROFESSIONAL ENGINEER — STATE OF CALIFORNIA

THE STATE OF CALIFORNIA OR ITS OFFICERS OR AGENTS SHALL NOT BE RESPONSIBLE FOR THE ACCURACY OR COMPLETENESS OF SCANNED COPIES OF THIS PLAN SHEET.

MARK THOMAS & CO., INC.
7300 FOLSOM BLVD STE 203
SACRAMENTO, CA 95826

CITY OF CHICO
CAPITAL PROJECT SERVICES
411 MAIN STREET
CHICO, CA 95927

CHANNELIZER (SURFACE MOUNTED)

STAGE	LOCATION	EA
1	"C1" 547+76.00 TO "C1" 549+76.00	5
	"C1" 553+28.82 TO "FS" 97+57.79	32
	"C1" 554+02.50 TO "WB" 97+35.08	44
	"C2" 557+99.00 TO "WB" 92+86.00	8
	"EB" 98+80.43 TO "EB" 99+70.72	20
	"FS" 98+88.24 TO "EB" 100+86.35	14
	"FS" 99+77.53 TO "WB" 99+55.44	26
	"FS" 103+56.45 TO "WB" 100+78.59	17
	"WB" 99+64.97 TO "FS" 110+00.00	18
	"C2" 562+65.17 TO "C2" 564+61.48	5
	SUBTOTAL	189
1A	"C2" 554+29.28 TO "C2" 555+19.18	27
	"C2" 556+96.08 TO "C2" 557+48.37	21
	"C1" 554+01.64 TO "C1" 554+90.53	22
	"C1" 556+39.11 TO "C1" 557+24.22	26
	SUBTOTAL	96
2	"C2" 554+75.97 TO "C2" 562+45.80	48
	"C2" 554+10.05 TO "C2" 557+36.86	34
	"C1" 550+37.65 TO "C1" 553+29.15	30
	"C1" 554+21.44 TO "C1" 557+35.42	33
	"EB" 97+90.58 TO "FS" 99+87.46	22
	"EB" 97+61.15 TO "EB" 97+59.12	31
	"EB" 97+85.36 TP "FS" 97+57.79	31
	"EB" 101+67.38 TO "EB" 102+09.82	6
	"EB" 100+31.24 TO "WB" 100+52.15	28
	"WB" 92+55.36 TO "WB" 95+58.05	31
	SUBTOTAL	294
	BID TOTAL	579

REMOVE PAVEMENT DELINEATION/PAVEMENT MARKER

STAGE	STATION	THERMOPLASTIC TRAFFIC STRIPE	PAVEMENT MARKER	THERMOPLASTIC PAVEMENT MARKING
		LF	EA	SF
1	"C2" 555+02.79 TO "C2" 555+08.67	153		150
	"C1" 556+32.69 TO "C1" 557+30.27	144		
	"EB" 98+14.39 TO "B" 116+71.58	1857	39	
	"WB" 97+34.87 TO "WB" 109+80.66	1246	26	
	"WB" 100+29.39 TO "WB" 109+80.66	952		
	"EB" 100+32.04 TO "B" 116+71.58	1640		
	"EB" 96+05.91 TO "EB" 97+53.41	148		159
	SUBTOTAL	6140	65	309
2	"C1" 552+08.92 TO "C1" 553+58.85	150		150
	"WB" 96+24.05 TO "WB" 97+89.72	250	22	
	"WB" 100+67.39 TO "WB" 105+74.41	508	11	
	"FS" 99+93.64 TO "FS" 101+90.83	197	6	
	"FS" 101+17.90 TO "FS" 101+91.64	74	3	
	"FS" 99+91.54 TO "FS" 101+92.37	202	10	
	"FS" 99+89.69 TO "FS" 100+43.90	54	3	
	SUBTOTAL	1435	55	150
	BID TOTAL	7575	120	459

ALTERNATIVE TEMPORARY CRASH CUSHION SYSTEM

STAGE	LOCATION	EA
1	"EB" 100+64.30	1
	"C2" 562+39.00	1
	"EB" 101+33.00	1
	"EB" 102+41.56	1
	"WB" 107+07.00	1
	SUBTOTAL	5
2	"WB" 99+36.00	1
	"C1" 550+07.00	1
	SUBTOTAL	2
	BID TOTAL	7

TRAFFIC HANDLING QUANTITIES
THQ-2

REVISED BY | DATE REVISED
E. WEEKS | J. PANGBURN
CALCULATED-DESIGNED BY | CHECKED BY
CONSULTANT FUNCTIONAL SUPERVISOR
JAMES MARSHALL PANGBURN
STATE OF CALIFORNIA - DEPARTMENT OF TRANSPORTATION
Caltrans

LAST REVISION DATE PLOTTED => $DATE
00-00-00 TIME PLOTTED => $TIME

PATH: V:\Chico-55-0131-SR32 Widening\CADD\Phase 2 - SR 99 to East\FUTURE\Mandatory\THQ2.dgn PLOT DATE: Nov 18, 2015-08:39:51am CAD USER: kfriedrich

BORDER LAST REVISED 7/2/2010 | USERNAME => $USER DGN FILE => $REQUEST | RELATIVE BORDER SCALE IS IN INCHES 0 1 2 3 | UNIT 0000 | PROJECT NUMBER & PHASE 0313000246

Dist	COUNTY	ROUTE	POST MILES TOTAL PROJECT	SHEET No.	TOTAL SHEETS
03	But	32	10.1/10.5	54	126

11-6-15
REGISTERED CIVIL ENGINEER DATE

NOVEMBER 13, 2015
PLANS APPROVAL DATE

JAMES MARSHALL PANGBURN
No. 71445
Exp. 12/31/15
CIVIL
REGISTERED PROFESSIONAL ENGINEER
STATE OF CALIFORNIA

THE STATE OF CALIFORNIA OR ITS OFFICERS OR AGENTS SHALL NOT BE RESPONSIBLE FOR THE ACCURACY OR COMPLETENESS OF SCANNED COPIES OF THIS PLAN SHEET.

MARK THOMAS & CO., INC.
7300 FOLSOM BLVD STE 203
SACRAMENTO, CA 95826

CITY OF CHICO
CAPITAL PROJECT SERVICES
411 MAIN STREET
CHICO, CA 95927

LEGEND:

MOTORIST INFORMATION SIGN (ONE POST)

[X] MOTORIST INFORMATION SIGN NUMBER

DIRECTION OF DETOUR TRAFFIC

X LOCATION OF CLOSURE

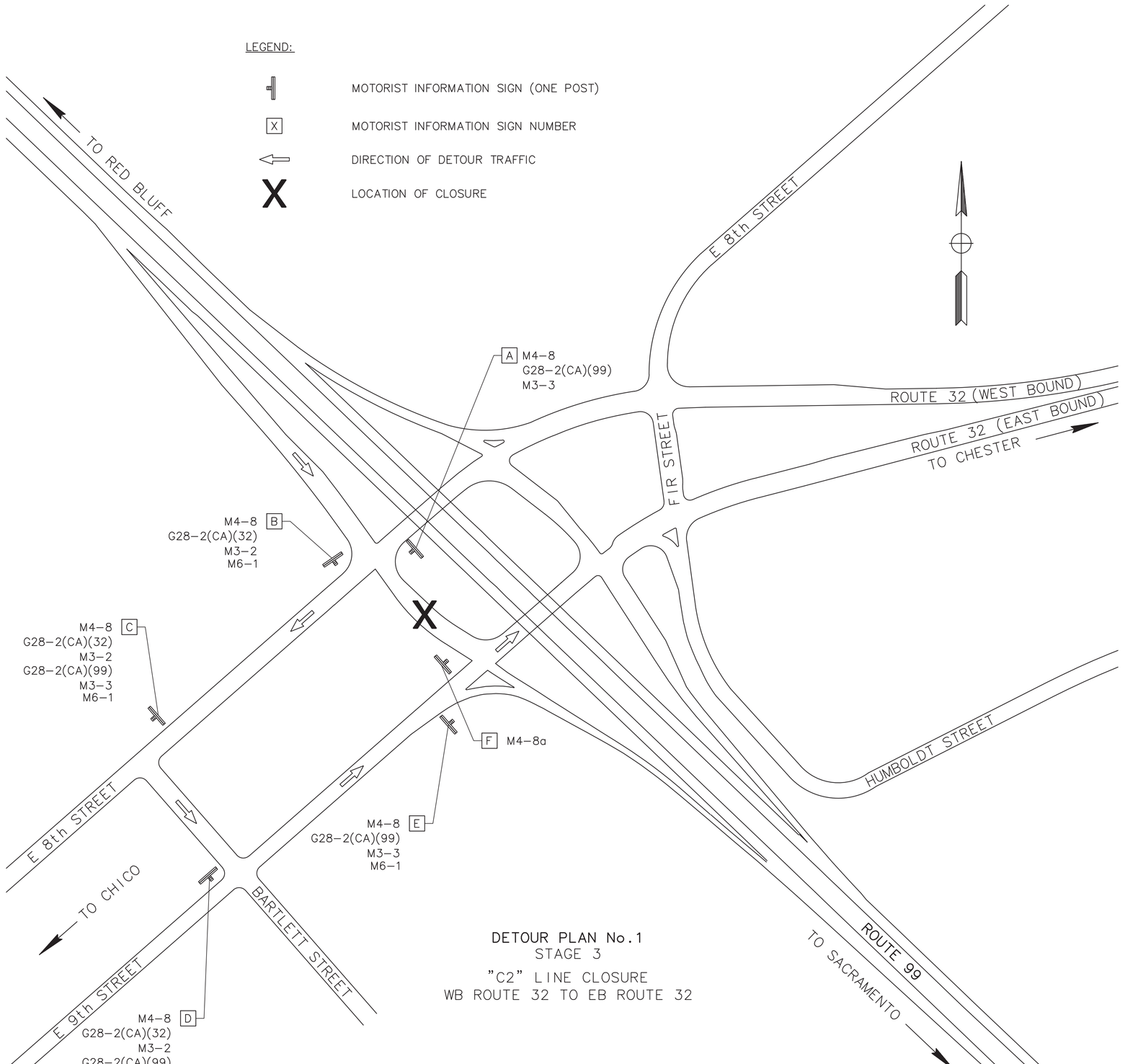

DETOUR PLAN No.1
STAGE 3
"C2" LINE CLOSURE
WB ROUTE 32 TO EB ROUTE 32

APPROVED FOR DETOUR WORK ONLY

TRAFFIC HANDLING NOTES:

FROM SB SR 99 TO EAST BOUND ROUTE 32

1. EXIT ON ROUTE 32 OFF-RAMP (EXIT 385).
2. TURN RIGHT ONTO E. 8TH STREET.
3. TURN LEFT ONTO BARTLETT STREET.
4. TURN LEFT ONTO E. 9TH STREET.

FROM WB ROUTE 32 TO SOUTH BOUND SR 99

1. TURN LEFT ONTO BARTLETT STREET.
2. TURN RIGHT ONTO E. 9TH STREET.
3. TURN RIGHT ONTO SB ROUTE 99 (ON-RAMP).

NOTES:

1. THIS DETOUR TO BE USED DURING THE ERECTION SIGN BRIDGES.
2. SEE TRAFFIC HANDLING PLANS FOR ADDITIONAL LOCATIONS OF CONSTRUCTION AREA SIGNS.
3. CLOSURE DATES AND TIMES SHALL BE APPROVED BY THE ENGINEER BEFORE SIGN INSTALLATION.
4. ADVANCE INFORMATION SIGNS SHALL BE INSTALLED 14 DAYS PRIOR TO ROAD/RAMP CLOSURES.
5. THE CONTRACTOR AND/OR ENGINEER SHALL NOTIFY THE LOCAL POLICE DEPARTMENT OF THE PROPOSED DETOURS ONCE EXACT DATES HAVE BEEN SET AND CONFIRMED.

GENERAL NOTES:

1. ALL CONSTRUCTION AREA SIGNS ARE STATIONARY MOUNTED UNLESS OTHERWISE NOTED.
2. EXACT LOCATION AND POSITION OF CONSTRUCTION AREA SIGNS TO BE DETERMINED BY THE ENGINEER.

DETOUR PLAN
NO SCALE

DE-1

REVISED BY	DATE REVISED
E. WEEKS	J. PANGBURN

CALCULATED-DESIGNED BY | CHECKED BY

CONSULTANT FUNCTIONAL SUPERVISOR: JAMES MARSHALL PANGBURN

STATE OF CALIFORNIA - DEPARTMENT OF TRANSPORTATION

LAST REVISION 00-00-00 | DATE PLOTTED => $DATE | TIME PLOTTED => $TIME

PATH: V:\Chico-55-0131-SR32 Widening\CADD\Phase 2 - SR 99 to East of Park and Ride\Drawing\sr32_DE1-DE2 PLOT DATE: Nov 18, 2015-08:41:06am CAD USER: kfriedrich

BORDER LAST REVISED 7/2/2010 | USERNAME => $USER | DGN FILE => $REQUEST | RELATIVE BORDER SCALE IS IN INCHES 0 1 2 3 | UNIT 0000 | PROJECT NUMBER & PHASE 0313000246

Dist	COUNTY	ROUTE	POST MILES TOTAL PROJECT	SHEET No.	TOTAL SHEETS
03	But	32	10.1/10.5	55	126

11-6-15
REGISTERED CIVIL ENGINEER DATE

JAMES MARSHALL PANGBURN
No. 71445
Exp. 12/31/15
CIVIL
REGISTERED PROFESSIONAL ENGINEER
STATE OF CALIFORNIA

NOVEMBER 13, 2015
PLANS APPROVAL DATE

THE STATE OF CALIFORNIA OR ITS OFFICERS OR AGENTS SHALL NOT BE RESPONSIBLE FOR THE ACCURACY OR COMPLETENESS OF SCANNED COPIES OF THIS PLAN SHEET.

MARK THOMAS & CO., INC.
7300 FOLSOM BLVD STE 203
SACRAMENTO, CA 95826

CITY OF CHICO
CAPITAL PROJECT SERVICES
411 MAIN STREET
CHICO, CA 95927

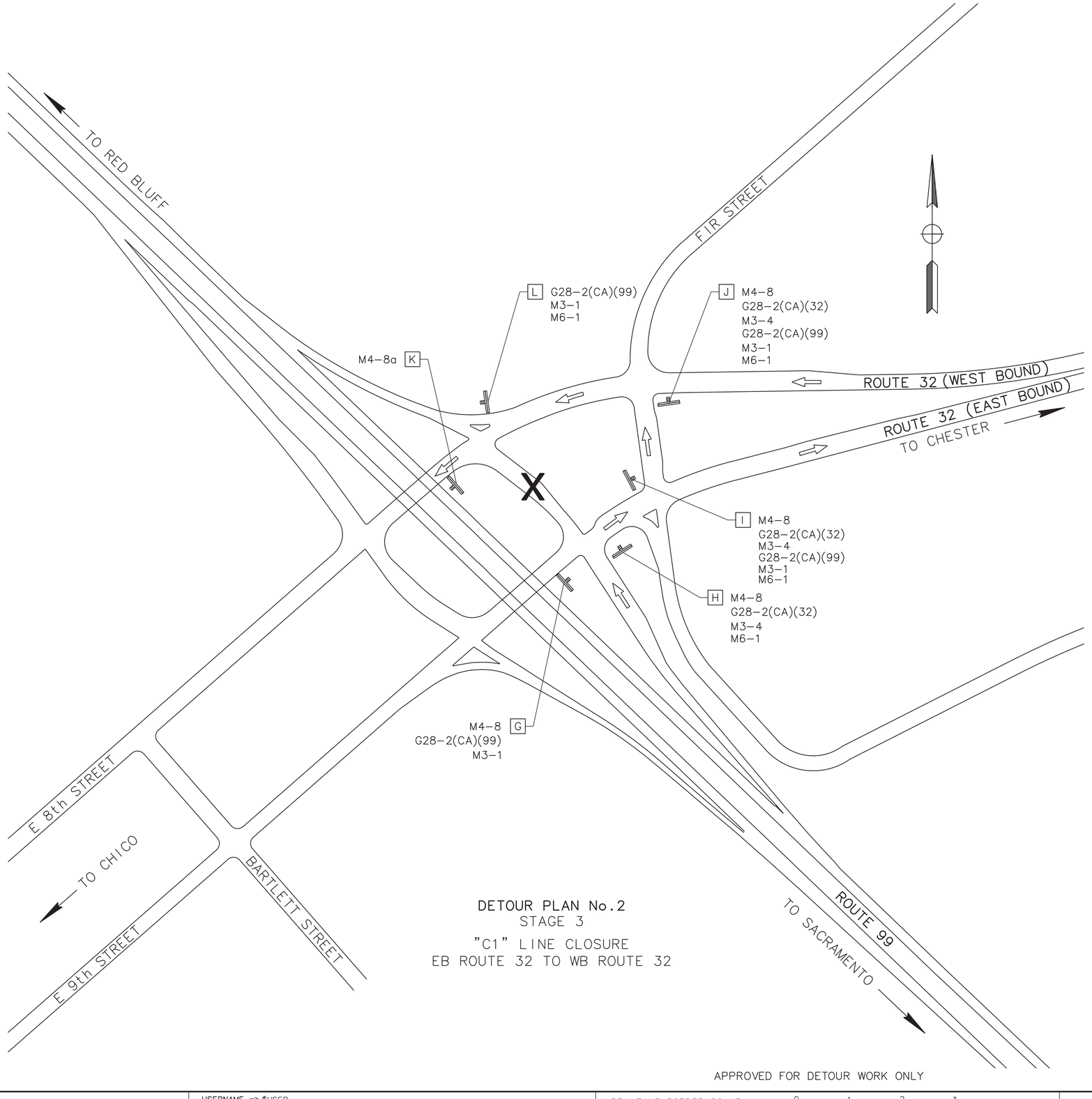

DETOUR PLAN No.2
STAGE 3
"C1" LINE CLOSURE
EB ROUTE 32 TO WB ROUTE 32

APPROVED FOR DETOUR WORK ONLY

TRAFFIC HANDLING NOTES:

FROM NORTH BOUND SR 99 TO WEST BOUND ROUTE 32

1. EXIT ON ROUTE 32 OFF-RAMP (EXIT 385).
2. TURN RIGHT ONTO EB ROUTE 32.
3. TURN LEFT ONTO FIR STREET.
4. TURN LEFT ONTO WB ROUTE 32.

FROM EAST BOUND ROUTE 32 TO NORTH BOUND SR 99

1. TURN LEFT ONTO FIR STREET.
2. TURN LEFT ONTO WB ROUTE 32.
3. TURN TURN RIGHT ONTO NB ROUTE 99 (ON-RAMP).

NOTES:

1. THIS DETOUR TO BE USED DURING THE ERECTION SIGN BRIDGES.
2. SEE TRAFFIC HANDLING PLANS FOR ADDITIONAL LOCATIONS OF CONSTRUCTION AREA SIGNS.
3. CLOSURE DATES AND TIMES SHALL BE APPROVED BY THE ENGINEER BEFORE SIGN INSTALLATION.
4. ADVANCE INFORMATION SIGNS SHALL BE INSTALLED 14 DAYS PRIOR TO ROAD/RAMP CLOSURES.
5. THE CONTRACTOR AND/OR ENGINEER SHALL NOTIFY THE LOCAL POLICE DEPARTMENT OF THE PROPOSED DETOURS ONCE EXACT DATES HAVE BEEN SET AND CONFIRMED.

GENERAL NOTES:

1. ALL CONSTRUCTION AREA SIGNS ARE STATIONARY MOUNTED UNLESS OTHERWISE NOTED.
2. EXACT LOCATION AND POSITION OF CONSTRUCTION AREA SIGNS TO BE DETERMINED BY THE ENGINEER.

DETOUR PLAN
NO SCALE

DE-2

REVISED BY | DATE REVISED
E. WEEKS | J. PANGBURN
CALCULATED-DESIGNED BY | CHECKED BY
CONSULTANT FUNCTIONAL SUPERVISOR: JAMES MARSHALL PANGBURN
STATE OF CALIFORNIA - DEPARTMENT OF TRANSPORTATION
Caltrans

LAST REVISION | DATE PLOTTED => $DATE
00-00-00 | TIME PLOTTED => $TIME

PATH: V:\Chico-55-0131-SR32 Widening\CADD\Phase 2 - SR 99 to East of Park and Ride\Drawing\sr32_DE1-DE2 PLOT DATE: Nov 18, 2015-08:41:35am CAD USER: kfriedrich

BORDER LAST REVISED 7/2/2010 | USERNAME => $USER | DGN FILE => $REQUEST | RELATIVE BORDER SCALE IS IN INCHES 0 1 2 3 | UNIT 0000 | PROJECT NUMBER & PHASE 0313000246

Dist	COUNTY	ROUTE	POST MILES TOTAL PROJECT	SHEET No.	TOTAL SHEETS
03	But	32	10.1/10.5	56	126

11-6-15
REGISTERED CIVIL ENGINEER DATE

NOVEMBER 13, 2015
PLANS APPROVAL DATE

JAMES MARSHALL PANGBURN No. 71445 Exp. 12/31/15 CIVIL — REGISTERED PROFESSIONAL ENGINEER — STATE OF CALIFORNIA

THE STATE OF CALIFORNIA OR ITS OFFICERS OR AGENTS SHALL NOT BE RESPONSIBLE FOR THE ACCURACY OR COMPLETENESS OF SCANNED COPIES OF THIS PLAN SHEET.

MARK THOMAS & CO., INC.
7300 FOLSOM BLVD STE 203
SACRAMENTO, CA 95826

CITY OF CHICO
CAPITAL PROJECT SERVICES
411 MAIN STREET
CHICO, CA 95927

LEGEND:

- LIMIT OF STRIPING PATTERN
- (No.) PAVEMENT DELINEATION DETAIL
- (LL) LIMIT LINE(12" WIDE WHITE THERMOPLASTIC PAVEMENT MARKING)
- (XW) CROSS WALK
- TYPE I (24') ARROW
- TYPE II ARROW
- TYPE III ARROW
- TYPE IV ARROW
- TYPE VI ARROW
- TYPE V ARROW
- BIKE LANE PAVEMENT MARKING & ARROW
- Si "SIGNAL" PAVEMENT MARKING
- A "AHEAD" PAVEMENT MARKING
- F "FWY" PAVEMENT MARKING
- O "ONLY" PAVEMENT MARKING
- S "STOP" PAVEMENT MARKING
- HP HIGHWAY POST MARKER
- DELINEATOR (CLASS I)
- S=XX' DELINEATOR SPACING
- BICYCLE LOOP DETECTOR SYMBOL

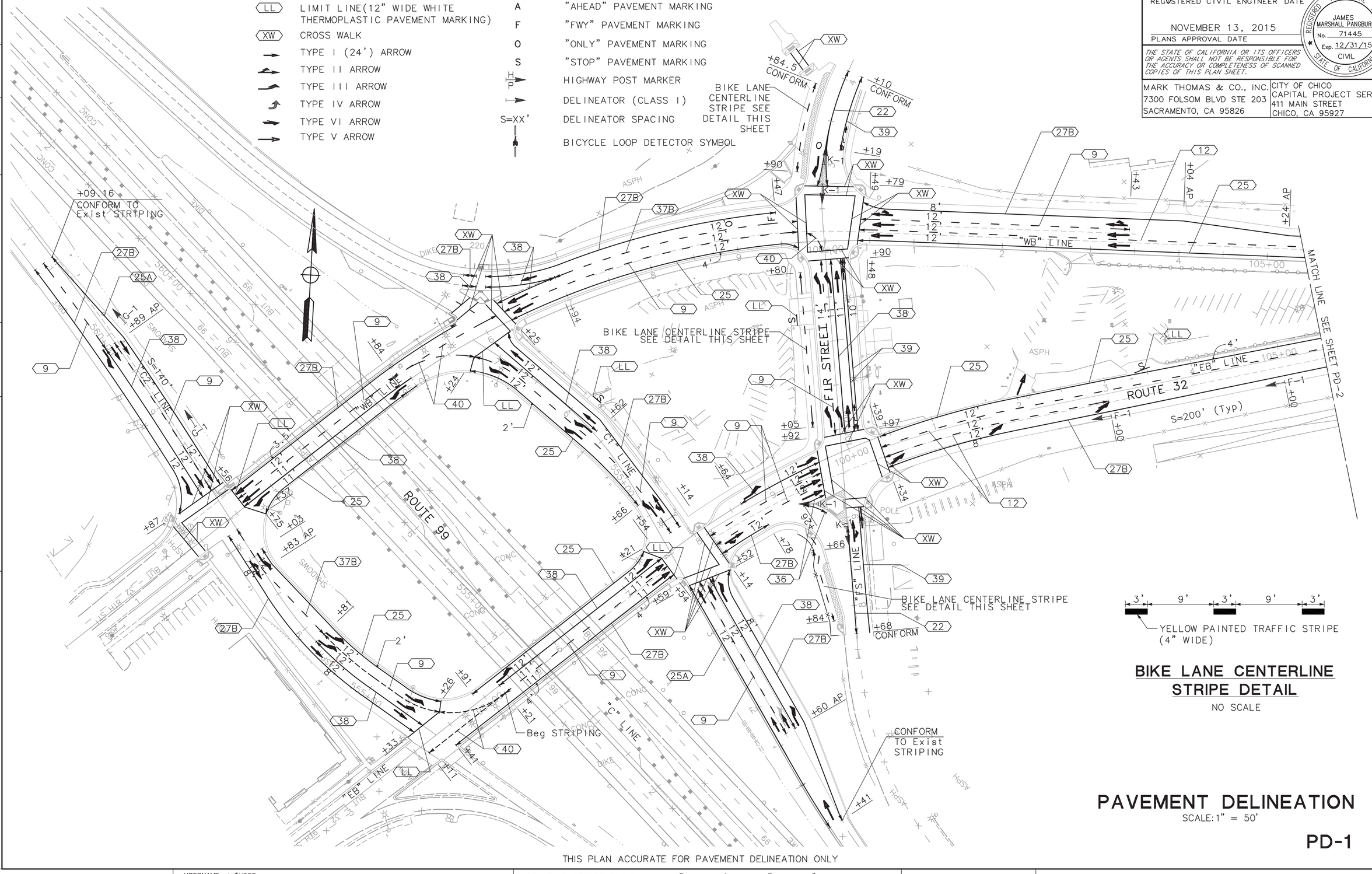

BIKE LANE CENTERLINE STRIPE DETAIL

NO SCALE

PAVEMENT DELINEATION

SCALE: 1" = 50'

PD-1

THIS PLAN ACCURATE FOR PAVEMENT DELINEATION ONLY

STATE OF CALIFORNIA – DEPARTMENT OF TRANSPORTATION — Caltrans

CONSULTANT FUNCTIONAL SUPERVISOR: JAMES MARSHALL PANGBURN

CALCULATED–DESIGNED BY: E. WEEKS
CHECKED BY: J. PANGBURN

REVISED BY	DATE REVISED

PATH: V:\Chico-55-0131-SR32 Widening\CADD\Phase 2 - SR 99 to East of Park and Ride\Drawing\sr32_PD1-PD2 PLOT DATE: Nov 18, 2015-08:43:40am CAD USER: kfriedrich

LAST REVISION | DATE PLOTTED => $DATE | TIME PLOTTED => $TIME
00-00-00

BORDER LAST REVISED 7/2/2010

USERNAME => $USER
DGN FILE => $REQUEST

RELATIVE BORDER SCALE IS IN INCHES 0 1 2 3

UNIT 0000

PROJECT NUMBER & PHASE 0313000246

Dist	COUNTY	ROUTE	POST MILES TOTAL PROJECT	SHEET No.	TOTAL SHEETS
03	But	32	10.1/10.5	57	126

11-6-15
REGISTERED CIVIL ENGINEER DATE

NOVEMBER 13, 2015
PLANS APPROVAL DATE

REGISTERED PROFESSIONAL ENGINEER
JAMES MARSHALL PANGBURN
No. 71445
Exp. 12/31/15
CIVIL
STATE OF CALIFORNIA

THE STATE OF CALIFORNIA OR ITS OFFICERS OR AGENTS SHALL NOT BE RESPONSIBLE FOR THE ACCURACY OR COMPLETENESS OF SCANNED COPIES OF THIS PLAN SHEET.

MARK THOMAS & CO., INC.
7300 FOLSOM BLVD STE 203
SACRAMENTO, CA 95826

CITY OF CHICO
CAPITAL PROJECT SERVICES
411 MAIN STREET
CHICO, CA 95927

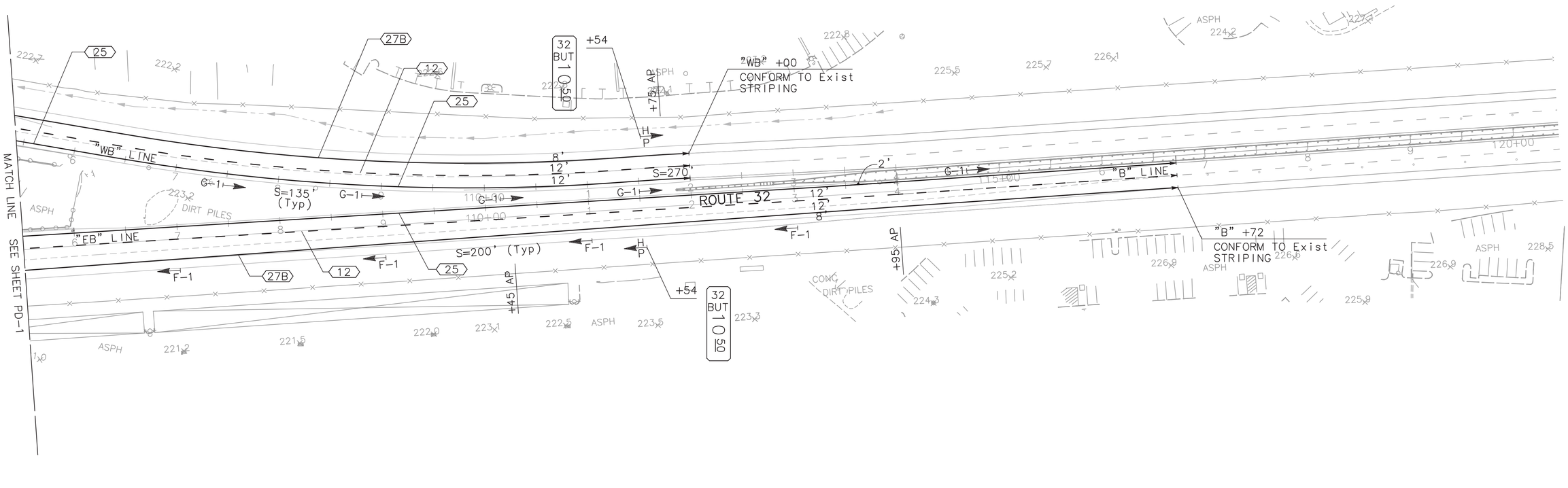

PAVEMENT DELINEATION

SCALE: 1" = 50'

PD-2

THIS PLAN ACCURATE FOR PAVEMENT DELINEATION ONLY

STATE OF CALIFORNIA – DEPARTMENT OF TRANSPORTATION
Caltrans

CONSULTANT FUNCTIONAL SUPERVISOR: JAMES MARSHALL PANGBURN

REVISED BY	DATE REVISED
E. WEEKS	J. PANGBURN

CALCULATED-DESIGNED BY | CHECKED BY

LAST REVISION 00-00-00 | DATE PLOTTED => $DATE | TIME PLOTTED => $TIME

PATH: V:\Chico-55-0131-SR32 Widening\CADD\Phase 2 - SR 99 to East of Park and Ride\Drawing\sr32_PD1-PD2 PLOT DATE: Nov 18, 2015-08:44:26am CAD USER: kfriedrich

BORDER LAST REVISED 7/2/2010 | USERNAME => $USER | DGN FILE => $REQUEST | RELATIVE BORDER SCALE IS IN INCHES 0 1 2 3 | UNIT 0000 | PROJECT NUMBER & PHASE 0313000246

Dist	COUNTY	ROUTE	POST MILES TOTAL PROJECT	SHEET No.	TOTAL SHEETS
03	But	32	10.1/10.5	58	126

11-6-15
REGISTERED CIVIL ENGINEER DATE

JAMES MARSHALL PANGBURN
No. 71445
Exp. 12/31/15
REGISTERED PROFESSIONAL ENGINEER
CIVIL
STATE OF CALIFORNIA

NOVEMBER 13, 2015
PLANS APPROVAL DATE

THE STATE OF CALIFORNIA OR ITS OFFICERS OR AGENTS SHALL NOT BE RESPONSIBLE FOR THE ACCURACY OR COMPLETENESS OF SCANNED COPIES OF THIS PLAN SHEET.

MARK THOMAS & CO., INC.
7300 FOLSOM BLVD STE 203
SACRAMENTO, CA 95826

CITY OF CHICO
CAPITAL PROJECT SERVICES
411 MAIN STREET
CHICO, CA 95927

STATION:	SHEET NO.	LINE NAME	THERMOPLASTIC TRAFFIC STRIPE														PAVEMENT MARKER			THERMOPLASTIC PAVEMENT MARKING								DELINEATOR		OBJECT MARKER		HIGHWAY POST MARKER
			9	12	22	25	25A	27B	27C	36	37B	38	38B	39	39A	40	BL CL	RETRO REFLECTIVE			ARROW TYPE					BIKE LANE	LINE LIMIT & CROSS-WALK	WORDS	TYP MOUNT				
																		TYPE D	TYPE G	TYPE H	I	II	III	V	VI				TYPE F-1	TYPE G-1	TYPE K-1	TYPE L-1	
			LF	LF	LF	LF	LF	LF	LF	LF	LF	LF	LF	LF	LF	LF	LF	EA	EA	EA	SF	SF	SF	SF	SF	SF	SF	SF	EA	EA	EA	EA	EA
"C2" 554+21 TO "C2" 554+33	PD-1	C2																									58						
"C2" 554+21 TO "C2" 555+81	PD-1	C2	159.8																4														
"C2" 554+26 TO "C2" 557+03	PD-1	C2				270.5														7													
"C2" 554+31 TO "C2" 557+35	PD-1	C2						309													62	45	210										
"C2" 554+31 TO "C2" 555+81	PD-1	C2										153.6							7														
"C2" 555+81 TO "C2" 557+35	PD-1	C2									153								12														
"C2" 557+77 TO "C2" 557+90	PD-1	C2																									126						
"C2" 557+87 TO "C2" 561+09	PD-1	C2						326.5																									
"C2" 557+88 TO "C2" 559+89	PD-1	C2										199.8							9														
"C2" 557+89 TO "C2" 561+09	PD-1	C2					320.8													14	124		84								2		
"C2" 557+89 TO "C2" 559+89	PD-1	C2	199.7																5														
"C2" 559+89 TO "C2" 561+09	PD-1	C2	120																4														
"EB" 94+11 TO "EB" 95+21	PD-1	EB														110																	
"EB" 94+41 TO "EB" 97+54	PD-1	EB						315.6																									
"EB" 94+49 TO "EB" 95+21	PD-1	EB														80																	
"EB" 94+91 TO "EB" 97+43	PD-1	EB				253.4														6			84	66									
"EB" 95+21 TO "EB" 97+54	PD-1	EB										233							11														
"EB" 95+21 TO "EB" 97+54	PD-1	EB	233																6														
"EB" 97+43 TO "EB" 98+14	PD-1	EB																									145						
"EB" 98+14 TO "EB" 99+60	PD-1	EB	283.7																7														
"EB" 98+14 TO "EB" 99+78	PD-1	EB						62														45	84	66									
"EB" 98+49 TO "EB" 99+64	PD-1	EB										115							6														
"EB" 98+89 TO "EB" 99+53	PD-1	EB							72																								
"EB" 99+26 TO "EB" 99+45	PD-1	EB								27																							
"EB" 99+26 TO "EB" 99+54	PD-1	EB								27														33									
"EB" 99+52 TO "EB" 100+34	PD-1	EB																									202.2						
"EB" 100+34 TO "EB" 116+72	PD-1	EB						1630																					6			1	
"EB" 100+34 TO "EB" 116+72	PD-1	EB		1895															42														
"EB" 100+41 TO "EB" 116+72	PD-1	EB				1631														35	31				126								1
"EB" 103+35 TO "EB" 103+53	PD-1	EB																									18	22					
"WB" 91+84 TO "WB" 92+76	PD-1	WB																									134.9						
SHEET TOTAL			996.2	1895	0	2155	320.8	2643	72	54	153	701.4	0	0	0	190	0	0	113	62	217	90	462	165	126	0	683.02	22	6	2	0	1	1

PAVEMENT DELINEATION QUANTITIES

PDQ-1

STATE OF CALIFORNIA – DEPARTMENT OF TRANSPORTATION
Caltrans

CONSULTANT FUNCTIONAL SUPERVISOR: JAMES MARSHALL PANGBURN
CALCULATED-DESIGNED BY: E. WEEKS
CHECKED BY: J. PANGBURN
REVISED BY
DATE REVISED

LAST REVISION DATE PLOTTED => $DATE
00-00-00 TIME PLOTTED => $TIME

PATH: V:\Chico-55-0131-SR32 Widening\CADD\Phase 2 - SR 99 to East\Final Design\PDQ\PDQ4.dgn PLOT DATE: Nov 18, 2015-08:45:26am CAD USER: kfriedrich

BORDER LAST REVISED 7/2/2010 | USERNAME => $USER | DGN FILE => $REQUEST | RELATIVE BORDER SCALE IS IN INCHES 0 1 2 3 | UNIT 0000 | PROJECT NUMBER & PHASE 0313000246

Dist	COUNTY	ROUTE	POST MILES TOTAL PROJECT	SHEET No.	TOTAL SHEETS
03	But	32	10.1/10.5	59	126

11-6-15
REGISTERED CIVIL ENGINEER DATE

JAMES MARSHALL PANGBURN
No. 71445
Exp. 12/31/15
CIVIL
REGISTERED PROFESSIONAL ENGINEER
STATE OF CALIFORNIA

NOVEMBER 13, 2015
PLANS APPROVAL DATE

THE STATE OF CALIFORNIA OR ITS OFFICERS OR AGENTS SHALL NOT BE RESPONSIBLE FOR THE ACCURACY OR COMPLETENESS OF SCANNED COPIES OF THIS PLAN SHEET.

MARK THOMAS & CO., INC.
7300 FOLSOM BLVD STE 203
SACRAMENTO, CA 95826

CITY OF CHICO
CAPITAL PROJECT SERVICES
411 MAIN STREET
CHICO, CA 95927

STATION:	SHEET NO.	LINE NAME	THERMOPLASTIC TRAFFIC STRIPE															PAVEMENT MARKER			THERMOPLASTIC PAVEMENT MARKING								DELINEATOR		OBJECT MARKER		HIGHWAY POST MARKER
			9	12	22	25	25A	27B	27C	36	37B	38	38B	39	39A	40	BL CL	RETRO REFLECTIVE			ARROW TYPE					BIKE LANE	LINE LIMIT & CROSS-WALK	WORDS	TYP MOUNT				
																		TYPE D	TYPE G	TYPE H	I	II	III	V	VI				TYPE F-1	TYPE G-1	TYPE K-1	TYPE L-1	
			LF	LF	LF	LF	LF	LF	LF	LF	LF	LF	LF	LF	LF	LF	LF	EA	EA	EA	SF	SF	SF	SF	SF	SF	SF	SF	EA	EA	EA	EA	EA
"WB" 92+62 TO "WB" 94+84	PD-1	WB										223							10				84	66									
"WB" 92+62 TO "WB" 95+74	PD-1	WB						312.9																									
"WB" 92+62 TO "WB" 94+84	PD-1	WB	223																6														
"WB" 92+62 TO "WB" 94+84	PD-1	WB				211																											
"WB" 94+84 TO "WB" 95+74	PD-1	WB														98																	
"WB" 94+84 TO "WB" 96+17	PD-1	WB														136																	
"WB" 96+00 TO "WB" 96+12	PD-1	WB								15																							
"WB" 96+13 TO "WB" 96+33	PD-1	WB																									72.2						
"WB" 96+24 TO "WB" 96+94	PD-1	WB										163																					
"WB" 96+28 TO "WB" 99+69	PD-1	WB	346																8					66									
"WB" 96+31 TO "WB" 99+69	PD-1	WB				339														8													
"WB" 96+94 TO "WB" 99+70	PD-1	WB									283								20														
"WB" 97+05 TO "WB" 99+47	PD-1	WB						251.5																				38					
"WB" 99+69 TO "WB" 100+49	PD-1	WB																									294						
"WB" 99+79 TO "WB" 99+95	PD-1	WB														29																	
"WB" 100+48 TO "WB" 112+00	PD-1	WB				1152														25		90		132						4		1	1
"WB" 100+48 TO "WB" 112+00	PD-1	WB		1149															25														
"WB" 100+49 TO "WB" 103+43	PD-1	WB	295																7														
"WB" 100+49 TO "WB" 112+00	PD-1	WB						1148																									
"C1" 550+41 TO "C1" 553+52	PD-1	C1						313.5													124		84	33									
"C1" 550+42 TO "C1" 553+59	PD-1	C1					317													14													
"C1" 551+59 TO "C1" 553+55	PD-1	C1										216							10														
"C1" 551+59 TO "C1" 553+57	PD-1	C1	198																5														
"C1" 553+51 TO "C1" 553+69	PD-1	C1																									93						
"C1" 554+21 TO "C1" 557+24	PD-1	C1	302.1					295.8											7		62	45	210										
"C1" 554+66 TO "C1" 557+20	PD-1	C1				247.7														6													
"C1" 555+62 TO "C1" 557+14	PD-1	C1										152.8							7														
"C1" 555+84 TO "C1" 555+95	PD-1	C1																									12	22					
"C1" 557+20 TO "C1" 557+07	PD-1	C1																									64						
SHEET TOTAL			1364	1149	0	1950	317	2321	0	15	283	754.8	0	0	0	263	0	0	105	53	186	135	378	297	0	0	535	60	0	4	0	1	1

PAVEMENT DELINEATION QUANTITIES

PDQ-2

STATE OF CALIFORNIA - DEPARTMENT OF TRANSPORTATION
Caltrans

CONSULTANT FUNCTIONAL SUPERVISOR: JAMES MARSHALL PANGBURN

CALCULATED-DESIGNED BY: E. WEEKS
CHECKED BY: J. PANGBURN

REVISED BY
DATE REVISED

LAST REVISION DATE PLOTTED => $DATE
00-00-00 TIME PLOTTED => $TIME

PATH: V:\Chico-55-0131-SR32 Widening\CADD\Phase 2 - SR 99 to East\Final\Mandatory\PDQ\PDQ4.dgn
CAD USER: kfriedrich
PLOT DATE: Nov 18, 2015-08:46:02am

BORDER LAST REVISED 7/2/2010
USERNAME => $USER
DGN FILE => $REQUEST
RELATIVE BORDER SCALE IS IN INCHES 0 1 2 3
UNIT 0000
PROJECT NUMBER & PHASE 0313000246

Dist	COUNTY	ROUTE	POST MILES TOTAL PROJECT	SHEET No.	TOTAL SHEETS
03	But	32	10.1/10.5	60	126

11-6-15
REGISTERED CIVIL ENGINEER DATE

JAMES MARSHALL PANGBURN
No. 71445
Exp. 12/31/15
CIVIL
REGISTERED PROFESSIONAL ENGINEER
STATE OF CALIFORNIA

NOVEMBER 13, 2015
PLANS APPROVAL DATE

THE STATE OF CALIFORNIA OR ITS OFFICERS OR AGENTS SHALL NOT BE RESPONSIBLE FOR THE ACCURACY OR COMPLETENESS OF SCANNED COPIES OF THIS PLAN SHEET.

MARK THOMAS & CO., INC.
7300 FOLSOM BLVD STE 203
SACRAMENTO, CA 95826

CITY OF CHICO
CAPITAL PROJECT SERVICES
411 MAIN STREET
CHICO, CA 95927

STATION:	SHEET NO.	LINE NAME	THERMOPLASTIC TRAFFIC STRIPE															PAVEMENT MARKER			THERMOPLASTIC PAVEMENT MARKING								DELINEATOR		OBJECT MARKER		HIGHWAY POST MARKER
			9	12	22	25	25A	27B	27C	36	37B	38	38B	39	39A	40	BL CL	RETRO REFLECTIVE			ARROW TYPE					BIKE LANE	LINE LIMIT & CROSS-WALK	WORDS	TYP MOUNT				
																		TYPE D	TYPE G	TYPE H	I	II	III	V	VI				TYPE F-1	TYPE G-1	TYPE K-1	TYPE L-1	
			LF	LF	LF	LF	LF	LF	LF	LF	LF	LF	LF	LF	LF	LF	LF	EA	EA	EA	SF	SF	SF	SF	SF	SF	SF	SF	EA	EA	EA	EA	EA
"FS" 97+68 to "FS" 98+89	PD-1	FS			122																	45											
"FS" 97+84 TO "FS" 98+66	PD-1	FS															84																
"FS" 98+48 TO "FS" 99+10	PD-1	FS												143												7					2		
"FS" 99+10 TO "FS" 99+98	PD-1	FS																									134						
"FS" 99+94 TO "FS" 101+92	PD-1	FS	198.7																5				168	66									
"FS" 99+95 TO "FS" 101+83	PD-1	FS										187.8							9														
"FS" 99+96 TO "FS" 101+92	PD-1	FS												392												50							
"FS" 100+05 TO "FS" 101+80	PD-1	FS															175																
"FS" 101+21 TO "FS" 101+33	PD-1	FS																									12	22					
"FS" 101+92 TO "FS" 102+76	PD-1	FS																									203						
"FS" 102+75 TO "FS" 103+97	PD-1	FS			199.6													18					42					22			2		
"FS" 102+90 TO "FS" 103+84	PD-1	FS															103																
"FS" 103+19 TO "FS" 103+97	PD-1	FS												86												25							
"FS" 103+93 TO "FS" 104+09	PD-1	FS																									48						
SHEET TOTAL			199	0	322	0	0	0	0	0	0	188	0	621	0	0	362	18	14	0	0	45	210	66	0	82	398	44	0	0	4	0	0
GRAND TOTAL			3044	2773	322	4105	638	5164	72	69	436	1644	0	621	0	453	362	18	225	109	403	270	1050	528	126	82	1616	126	6	6	4	2	2
SUMMARY			18476															352			4201								12		6		2

PAVEMENT DELINEATION QUANTITIES
PDQ-3

STATE OF CALIFORNIA - DEPARTMENT OF TRANSPORTATION
CONSULTANT FUNCTIONAL SUPERVISOR: JAMES MARSHALL PANGBURN
CALCULATED-DESIGNED BY: E. WEEKS
CHECKED BY: J. PANGBURN
REVISED BY
DATE REVISED

LAST REVISION 00-00-00
DATE PLOTTED => $DATE
TIME PLOTTED => $TIME

PATH: V:\Chico-55-0131-SR32 Widening\CADD\Phase 2 - SR 99 to East\ENV\Mitigation\PDQ\PDQ4
CAD USER: kfriedrich
PLOT DATE: Nov 18, 2015-08:46:34am

BORDER LAST REVISED 7/2/2010
USERNAME => $USER
DGN FILE => $REQUEST
RELATIVE BORDER SCALE IS IN INCHES 0 1 2 3
UNIT 0000
PROJECT NUMBER & PHASE 0313000246

NOTES:

1. ALL SIGN CODES ARE FEDERAL SIGN CODES UNLESS OTHERWISE DESIGNATED AS CALIFORNIA SIGN CODES.
2. LOCATION AND POSITION OF ROADSIDE SIGNS ARE APPROXIMATE. EXACT LOCATION AND POSITION WILL BE DETERMINED BY THE ENGINEER.
3. ALL SIGNS NOT SHOWN FOR RELOCATION SHALL REMAIN IN PLACE.
4. ALL SIGNS TO BE REMOVED WITHIN LIMITS OF S-1 ARE SHOWN ON SHEET S-3.

LEGEND:

- REMOVE ROADSIDE SIGN
- RELOCATE ROADSIDE SIGN
- ROADSIDE SIGN SINGLE POST
- ROADSIDE SIGN DOUBLE POST
- SIGNAL MAST ARM MOUNTED SIGN (SEE ELECTRICAL SHEETS FOR INSTALLATION)
- ROADSIDE SIGN SSBM
- ROADSIDE SIGN NUMBER
- EXISTING ROADSIDE SIGN
- <CA> CALIFORNIA SIGN CODE
- INSTALL ROADSIDE SIGN
- ROADSIDE SIGN TO REMAIN
- OVERHEAD SIGN (TRUSS)
- BRIDGE MOUNTED SIGN

Dist	COUNTY	ROUTE	POST MILES TOTAL PROJECT	SHEET No.	TOTAL SHEETS
03	But	32	10.1/10.5	61	126

11-6-15
REGISTERED CIVIL ENGINEER DATE

NOVEMBER 13, 2015
PLANS APPROVAL DATE

REGISTERED PROFESSIONAL ENGINEER — JAMES MARSHALL PANGBURN — No. 71445 — Exp. 12/31/15 — CIVIL — STATE OF CALIFORNIA

THE STATE OF CALIFORNIA OR ITS OFFICERS OR AGENTS SHALL NOT BE RESPONSIBLE FOR THE ACCURACY OR COMPLETENESS OF SCANNED COPIES OF THIS PLAN SHEET.

MARK THOMAS & CO., INC.
7300 FOLSOM BLVD STE 203
SACRAMENTO, CA 95826

CITY OF CHICO
CAPITAL PROJECT SERVICES
411 MAIN STREET
CHICO, CA 95927

REVISED BY	DATE REVISED
E. WEEKS	J. PANGBURN

CALCULATED–DESIGNED BY | CHECKED BY

CONSULTANT FUNCTIONAL SUPERVISOR: JAMES MARSHALL PANGBURN

STATE OF CALIFORNIA – DEPARTMENT OF TRANSPORTATION

Caltrans

ROUTE 99 | ROUTE 32 | 8TH ST | 9TH ST | FIR STREET | SEE SHEET S-2 | MATCH LINE

1-1 G97A<CA> G33-1(Rt)<CA> I-7
1-2 D9-11 D9-9 G33-1 Rt <CA>
1-3 R6-1L R6-1R
1-4 R3-2 R6-1R
1-5 R5-1 R5-1a
1-6 R6-1L R6-1R
1-7 R5-1 R5-1a
1-8 R3-1
1-9 R3-2
1-10 R9-3a R96B(Rt)<CA> R9-3a R96B(Lt)<CA> R6-1R
1-11 R3-2 R6-2R
1-12 R6-1R R6-1L
1-13 G72 <CA> G66-57 <CA>
1-14 W34C(Lt) <CA>
1-15 D4-2L
1-16 R3-1 R6-1L
1-17 R9-3a R96B(Rt)<CA> R9-3a R96B(Lt)<CA> R6-1R
1-18 R6-1L
1-19 G77-4 <CA> G8-1 <CA> G66-56 <CA> M6-4 G92 <CA>
1-20 R5-1 R5-1a M6-2
1-21 G92 <CA> G28-2(99)<CA> M3-3 M6-2
1-22 R3-1
1-23 G92 <CA> G28-2 <CA> M3-3 M6-2
1-24 W12-2 <CA>
1-25 R2-1(35)
1-26 R2-1(35)
1-27 R9-3a R96B(Rt)<CA> R9-3a R96B(Lt)<CA> R6-1R
1-28 R6-1R
1-29 I-7 G97A<CA> G33-1(Lt)<CA>
1-30 R9-3a R96B(Rt)<CA> R9-3a R96B(Lt)<CA> R6-1R
1-31 R3-2
1-32 R3-1
1-33 D4-2
1-34 R6-1L R6-1R
1-35 R5-1 R5-1a
1-36 R3-2 R6-1R
1-37 I-7 G97A<CA> M6-3
1-38 G72 <CA> G66-57<CA>
1-39 D4-2R
1-40 G77-5.2<CA> 84"X72" Orland / Chester 8" UC 6" LC
1-41 R5-10c
1-42 R5-1 R5-1a
1-43 G7-1<CA> 54"X24" G66-57<CA> G33-1(Lt)<CA> Fir St 8"UC 6" LC
1-44 R6-1R
1-45 R3-2
1-46 R2-1(35)
1-47 D4-2L
1-48 R1 R6-1L
1-49 R3-1 R6-2L
1-50 R3-2 R6-2R
1-51 R61-34<CA>
1-52 G66-57<CA> M5-1L
1-53 R2-1(35)
1-54 R2-1(35)
1-55 R18B(Rt)<CA>
1-56 G8-22<CA> 42"X30" E 8th St → 6"UC 41/2" LC
1-57 R3-5R
1-58 R3-2
1-59 R5-1 R5-1a
1-60 R3-2
1-61 R1-1
1-62 R3-2
1-63 G72 <CA> R6-1R
1-64 G7-1<CA> 36"X36" Fir St 8"UC 6" LC
1-65 W9-1R
1-66 S32 <CA> S32-1 <CA>
1-67 D4-2L
1-68 SG 20<CA>
1-69 R1-1
1-70 R3-1
1-71 R6-1R
1-72 G5 <CA>
1-73 G28-2(32)<CA> M3-2
1-74 R3-1 R6-1L R6-1R
1-75 R3-2 R6-1R R6-1L
1-76 R6-1L
1-77 R61-34<CA>
1-78 R6-1L
1-80 SPECIAL <CA> (PARK AND ROUTE)
1-81 G8-22<CA> 54"X42" E 8th St → 8"UC 6" LC
1-82 W4-2R
1-83 R81<CA>
1-85 R81<CA>

HS-51 G78-6.1<CA> 132"X70" TO 99 NORTH Red Bluff 8" E 10.67" UC 8" LC BRIDGE MOUNTED SIGN
HS-52 G24-1<CA> 96"X70" 32 EAST Chester 8" E 10.67" UC 8" LC BRIDGE MOUNTED SIGN
HS-53 G24-1<CA> 96"X70" 32 WEST Orland 8" E 10.67" UC 8" LC BRIDGE MOUNTED SIGN
HS-54 G78-6.1<CA> 132"x70" TO 99 SOUTH Yuba City 8" E 10.67" UC 8" LC BRIDGE MOUNTED SIGN
HS-55 G20-6<CA> 120"X90" 99 SOUTH Yuba City LEFT LANE G24-5<CA> 144"X90" 99 NORTH Red Bluff FWY ONLY 8" E 10.67" UC 8" LC 10" E
HS-56 G24-6<CA> 204"X90" 32 WEST Orland ONLY G24-5<CA> 144"X90" 99 NORTH Red Bluff FWY ONYL 8" E 10.67"UC 8" LC
HS-57 G24-6<CA> 204"X90" 32 EAST Chester ONLY G24-5<CA> 144"X90" 99 SOUTH Yuba City FWY ONLY 8" E 10.67" UC 8" LC

Forest Ranch	16
Chester	70
Susanville	104

G66-56<CA> M4-6 W34A(26)<CA>

THIS PLAN ACCURATE FOR SIGN WORK ONLY

SIGN PLAN

SCALE: 1" = 50'

S-1

BORDER LAST REVISED 7/2/2010 | USERNAME => $USER | RELATIVE BORDER SCALE 0 1 2 3 | UNIT 0000 | PROJECT NUMBER & PHASE 0313000246

Dist	COUNTY	ROUTE	POST MILES TOTAL PROJECT	SHEET No.	TOTAL SHEETS
03	But	32	10.1/10.5	62	126

11-6-15
REGISTERED CIVIL ENGINEER DATE

NOVEMBER 13, 2015
PLANS APPROVAL DATE

REGISTERED PROFESSIONAL ENGINEER
JAMES MARSHALL PANGBURN
No. 71445
Exp. 12/31/15
CIVIL
STATE OF CALIFORNIA

THE STATE OF CALIFORNIA OR ITS OFFICERS OR AGENTS SHALL NOT BE RESPONSIBLE FOR THE ACCURACY OR COMPLETENESS OF SCANNED COPIES OF THIS PLAN SHEET.

MARK THOMAS & CO., INC.
7300 FOLSOM BLVD STE 203
SACRAMENTO, CA 95826

CITY OF CHICO
CAPITAL PROJECT SERVICES
411 MAIN STREET
CHICO, CA 95927

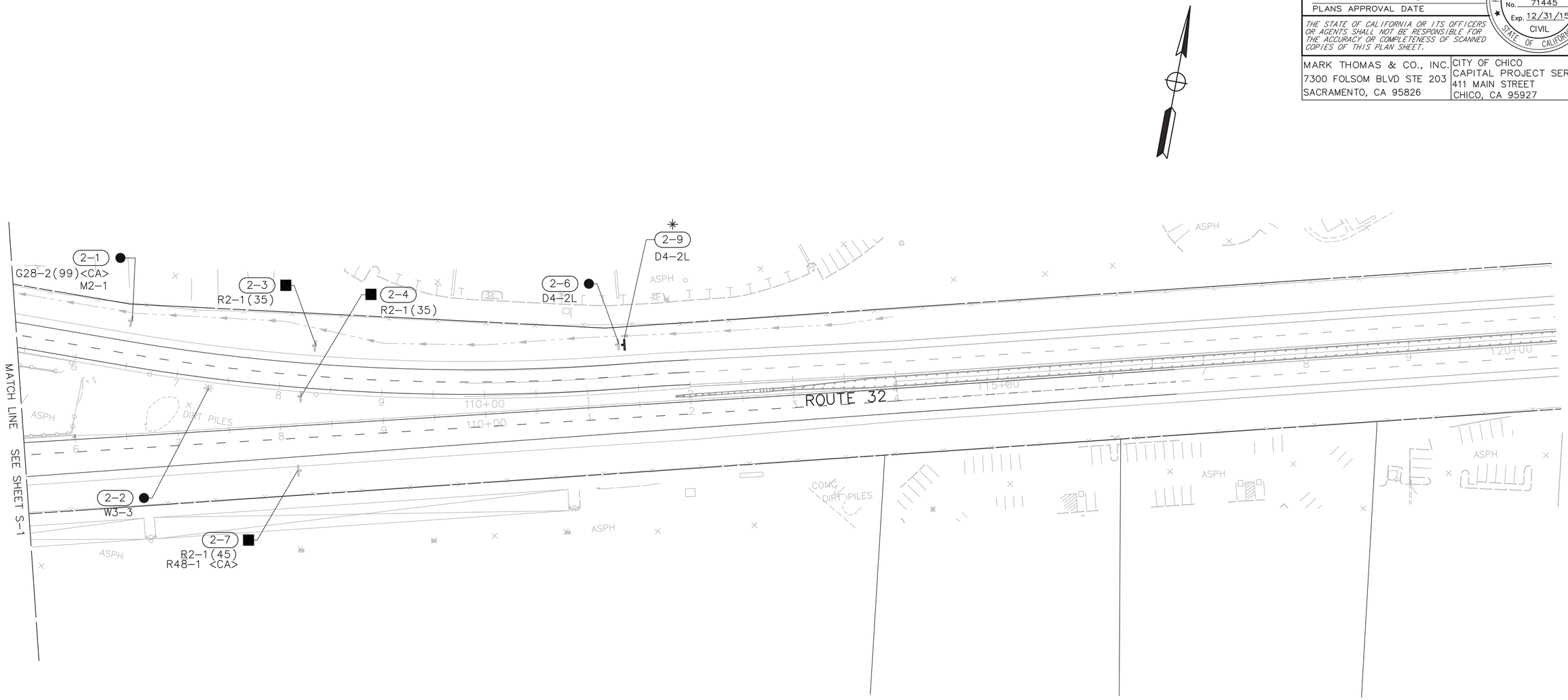

SIGN PLAN

SCALE: 1" = 50'

S-2

THIS PLAN ACCURATE FOR SIGN WORK ONLY

STATE OF CALIFORNIA - DEPARTMENT OF TRANSPORTATION
Caltrans

CONSULTANT FUNCTIONAL SUPERVISOR: JAMES MARSHALL PANGBURN
CALCULATED-DESIGNED BY: E. WEEKS
CHECKED BY: J. PANGBURN
REVISED BY
DATE REVISED

PATH: V:\Chico-55-0131-SR32 Widening\CADD\Phase 2 - SR 99 to East Lake Marshall Rd\Drawing\ PLOT DATE: Nov 18, 2015-08:48:58am CAD USER: kfriedrich

LAST REVISION 00-00-00 DATE PLOTTED => $DATE TIME PLOTTED => $TIME

BORDER LAST REVISED 7/2/2010 | USERNAME => $USER DGN FILE => $REQUEST | RELATIVE BORDER SCALE IS IN INCHES 0 1 2 3 | UNIT 0000 | PROJECT NUMBER & PHASE 0313000246

NOTES:

1. ALL SIGN CODES ARE FEDERAL SIGN CODES UNLESS OTHERWISE DESIGNATED AS CALIFORNIA SIGN CODES.
2. LOCATION AND POSITION OF ROADSIDE SIGNS ARE APPROXIMATE. EXACT LOCATION AND POSITION WILL BE DETERMINED BY THE ENGINEER.
3. ALL SIGNS NOT SHOWN FOR REMOVAL OR RELOCATION SHALL REMAIN IN PLACE.

Dist	COUNTY	ROUTE	POST MILES TOTAL PROJECT	SHEET No.	TOTAL SHEETS
03	But	32	10.1/10.5	63	126

11-6-15
REGISTERED CIVIL ENGINEER DATE

NOVEMBER 13, 2015
PLANS APPROVAL DATE

JAMES MARSHALL PANGBURN No. 71445 Exp. 12/31/15 CIVIL — REGISTERED PROFESSIONAL ENGINEER — STATE OF CALIFORNIA

THE STATE OF CALIFORNIA OR ITS OFFICERS OR AGENTS SHALL NOT BE RESPONSIBLE FOR THE ACCURACY OR COMPLETENESS OF SCANNED COPIES OF THIS PLAN SHEET.

MARK THOMAS & CO., INC.
7300 FOLSOM BLVD STE 203
SACRAMENTO, CA 95826

CITY OF CHICO
CAPITAL PROJECT SERVICES
411 MAIN STREET
CHICO, CA 95927

3-2 SPECIAL
3-3 R3-2
3-4 R5-1 R5-1a
3-5 R3-2
3-6 R3-2 R6-1R
3-7 R9-3a R9-3a
3-8 R5-1 R5-1a
3-9 G28-2 (CA) M3-3 M3-4 M1-1 M1-3
3-10 G8-7 <CA>
3-20 R5-1 R5-1a
3-21 R3-2 R3-1
3-22 R5-1 R5-1a
3-23 R9-3a R6-1R
3-24 R1-1L
3-25 R61<CA>
3-26 D9-7 D9-9 M1-3
3-27 R3-2
3-28 R3-1 R6-1L
3-29 R5-1 R5-1a
3-30 G28-2(99)<CA> G28-2(32)<CA> M3-2 M1-2 M1-3 M3-1
3-31 R9-3a R9-3a
3-32 R3-2 R6-1R
3-33 G28-2(32) <CA> M3-4 M1-1L
3-34 G97A <CA> G1-1 D9-9 D9-11 I-7
3-35 R5-1 R5-1a
3-36 R2-1(35)
3-37 R9-3a R9-3a
3-38 R6-1R
3-39 R3-1 R3-2
3-40 W11-1
3-41 G8-7 <CA>
3-42 R5-1 R5-1a
3-43 G8-13 (CA) I-7 M1-3 G97A <CA>
3-44 G28-2(32)<CA> M1-1 M1-3 M3-2 M3-4
3-45 D4-2 R1-1L
3-46 G66-57<CA> G33-1(Rt)<CA>
3-47 D3-1
3-48 R1-1 R3-1
3-50 G28-2 <CA> M3-4
3-51 R2-1(35)
3-53 R1-1 R3-2
3-54 G8-7 <CA>
3-55 R1-1L
3-57 R1-1 R3-1 R6-1L
3-58 R1-1 R3-2
3-59 G28-2 <CA>
3-60 D4-2R
3-61 R1-1L
3-62 G8<CA> 32 ORLAND (ON BRIDGE)
3-63 G8<CA> 99 SACRAMENTO (ON BRIDGE)
3-64 G8<CA> 32 CHESTER (ON BRIDGE)
3-65 G8<CA> 99 RED BLUFF (ON BRIDGE)
3-66 W12-2
3-62 W11-1
3-64 W11-1 W16-7pL
3-65 W11-1 W16-7pR

ROUTE 99
ROUTE 32
FIR STREET

SIGN PLAN (REMOVE SIGN DETAIL)

SCALE: 1" = 50'

S-3

THIS PLAN ACCURATE FOR SIGN WORK ONLY

STATE OF CALIFORNIA – DEPARTMENT OF TRANSPORTATION
Caltrans
CONSULTANT FUNCTIONAL SUPERVISOR: JAMES MARSHALL PANGBURN
CALCULATED– DESIGNED BY: E. WEEKS
CHECKED BY: J. PANGBURN
REVISED BY
DATE REVISED

PATH: V:\Chico-55-0131-SR32 Widening\CADD\Phase 2 - SR 99 to East\Plans\Sign\Sign Drawing\
PLOT DATE: Nov 18, 2015–08:51:18am
CAD USER: kfriedrich

LAST REVISION 00-00-00 | DATE PLOTTED => $DATE | TIME PLOTTED => $TIME

BORDER LAST REVISED 7/2/2010 | USERNAME => $USER | DGN FILE => $REQUEST | RELATIVE BORDER SCALE IS IN INCHES 0 1 2 3 | UNIT 0000 | PROJECT NUMBER & PHASE 0313000246

Dist	COUNTY	ROUTE	POST MILES TOTAL PROJECT	SHEET No.	TOTAL SHEETS
03	But	32	10.1/10.5	64	126

11-6-15
REGISTERED CIVIL ENGINEER DATE

NOVEMBER 13, 2015
PLANS APPROVAL DATE

JAMES MARSHALL PANGBURN No. 71445 Exp. 12/31/15 CIVIL — REGISTERED PROFESSIONAL ENGINEER — STATE OF CALIFORNIA

THE STATE OF CALIFORNIA OR ITS OFFICERS OR AGENTS SHALL NOT BE RESPONSIBLE FOR THE ACCURACY OR COMPLETENESS OF SCANNED COPIES OF THIS PLAN SHEET.

MARK THOMAS & CO., INC.
7300 FOLSOM BLVD STE 203
SACRAMENTO, CA 95826

CITY OF CHICO
CAPITAL PROJECT SERVICES
411 MAIN STREET
CHICO, CA 95927

NOTE:

1. h = DISTANCE FROM BOTTOM OF FRAME TO BOTTOM OF BASE PLATE.
2. OVERHEAD SIGN PANELS SHALL BE LAMINATED PANELS TYPE A.

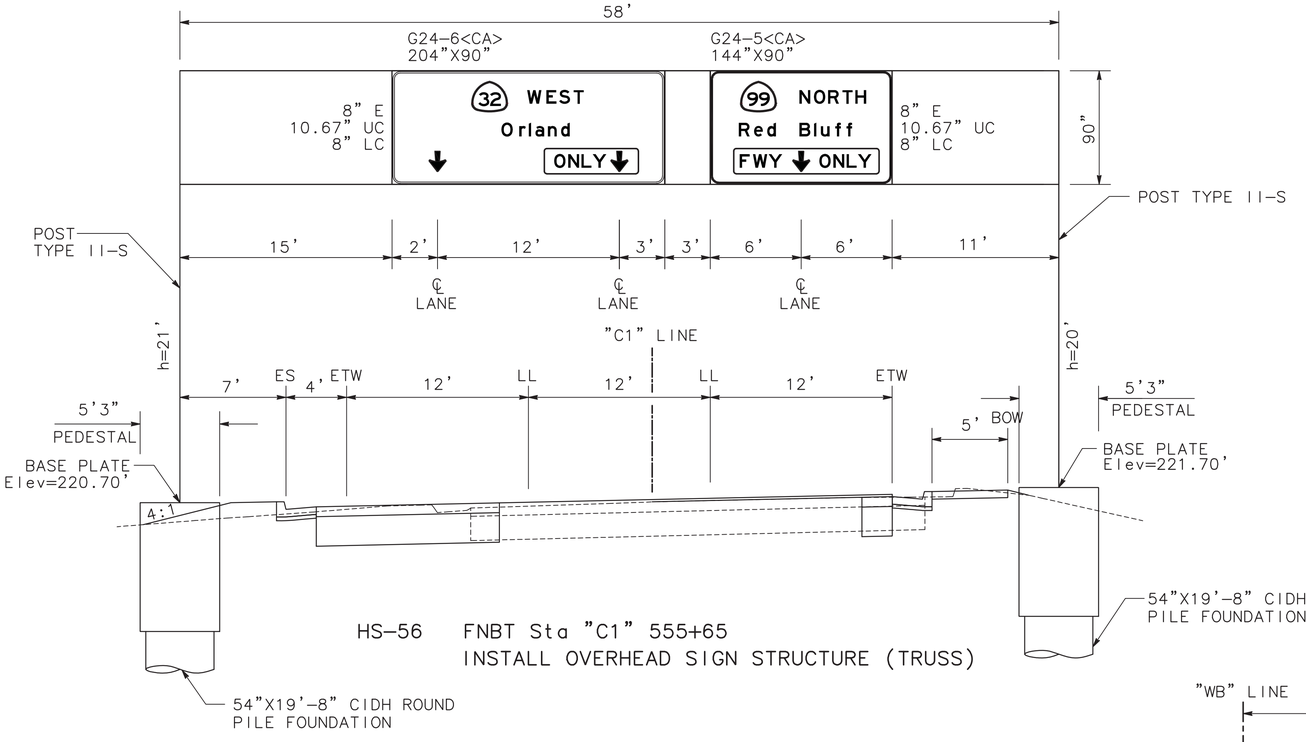

HS-56 FNBT Sta "C1" 555+65
INSTALL OVERHEAD SIGN STRUCTURE (TRUSS)

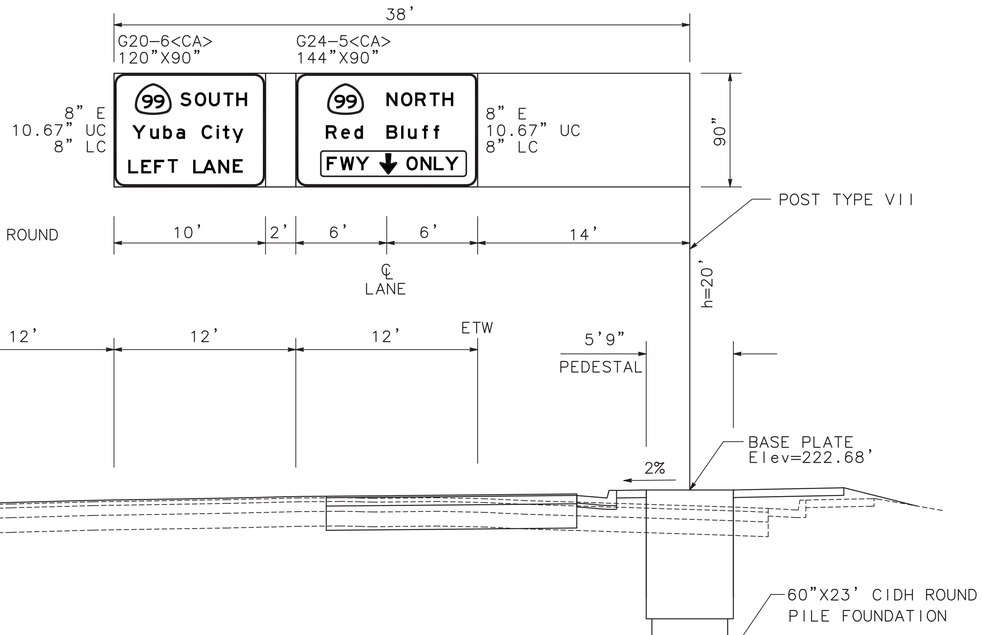

HS-55 FWBT Sta "WB" 98+75
INSTALL OVERHEAD SIGN STRUCTURE (TRUSS)

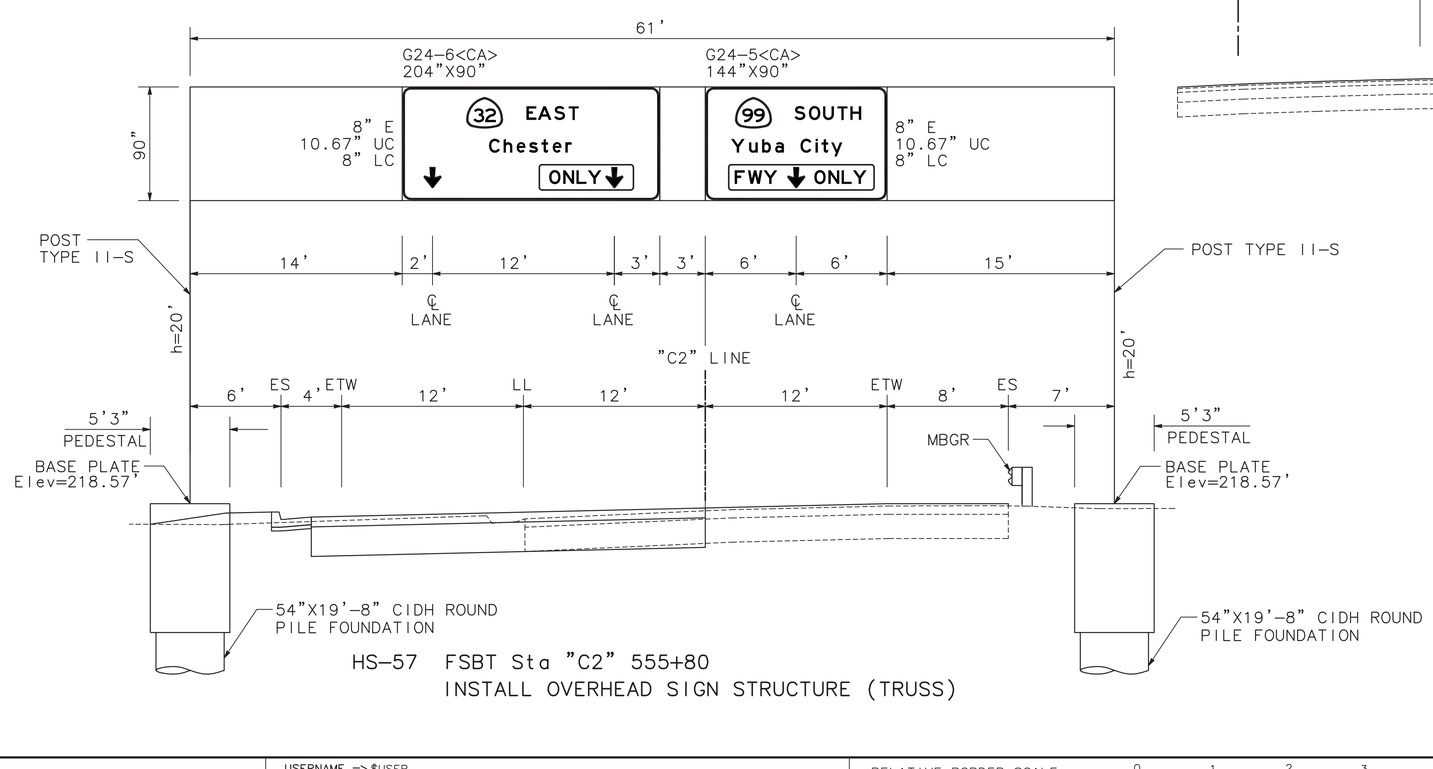

HS-57 FSBT Sta "C2" 555+80
INSTALL OVERHEAD SIGN STRUCTURE (TRUSS)

SIGN DETAILS

NO SCALE

SD-1

STATE OF CALIFORNIA - DEPARTMENT OF TRANSPORTATION
CONSULTANT FUNCTIONAL SUPERVISOR: JAMES MARSHALL PANGBURN
CALCULATED-DESIGNED BY: E. WEEKS
CHECKED BY: J. PANGBURN
REVISED BY / DATE REVISED

LAST REVISION 00-00-00 DATE PLOTTED => $DATE TIME PLOTTED => $TIME

PATH: V:\Chico-55-0131-SR32 Widening\CADD\Phase 2 - SR 99 to East\Final Design\Standard Sheets\SD Drawings\
PLOT DATE: Nov 18, 2015-08:53:12am
CAD USER: kfriedrich

BORDER LAST REVISED 7/2/2010 | USERNAME => $USER | DGN FILE => $REQUEST | RELATIVE BORDER SCALE IS IN INCHES 0 1 2 3 | UNIT 0000 | PROJECT NUMBER & PHASE 0313000246

Dist	COUNTY	ROUTE	POST MILES TOTAL PROJECT	SHEET No.	TOTAL SHEETS
03	But	32	10.1/10.5	65	126

11-6-15
REGISTERED CIVIL ENGINEER DATE

NOVEMBER 13, 2015
PLANS APPROVAL DATE

REGISTERED PROFESSIONAL ENGINEER
JAMES MARSHALL PANGBURN
No. 71445
Exp. 12/31/15
CIVIL
STATE OF CALIFORNIA

THE STATE OF CALIFORNIA OR ITS OFFICERS OR AGENTS SHALL NOT BE RESPONSIBLE FOR THE ACCURACY OR COMPLETENESS OF SCANNED COPIES OF THIS PLAN SHEET.

MARK THOMAS & CO., INC.
7300 FOLSOM BLVD STE 203
SACRAMENTO, CA 95826

CITY OF CHICO
CAPITAL PROJECT SERVICES
411 MAIN STREET
CHICO, CA 95927

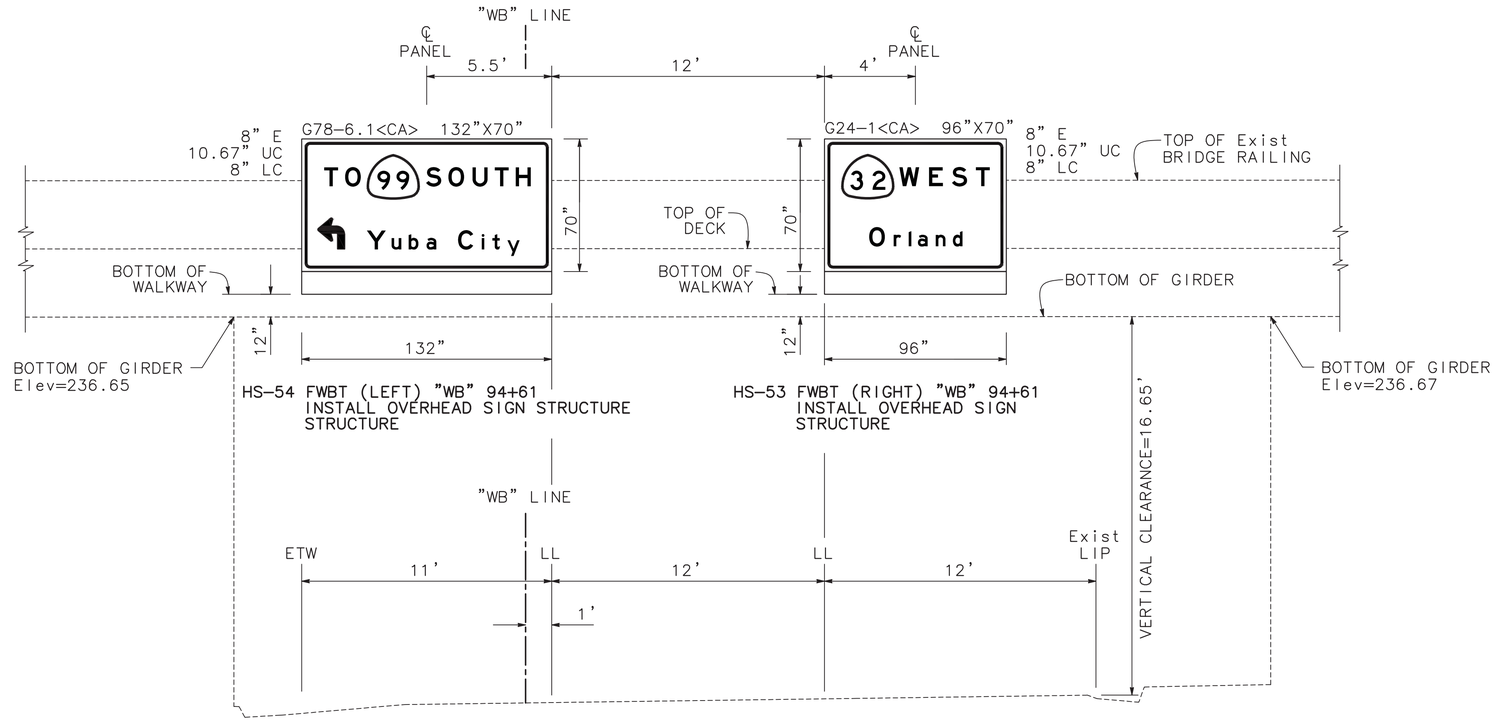

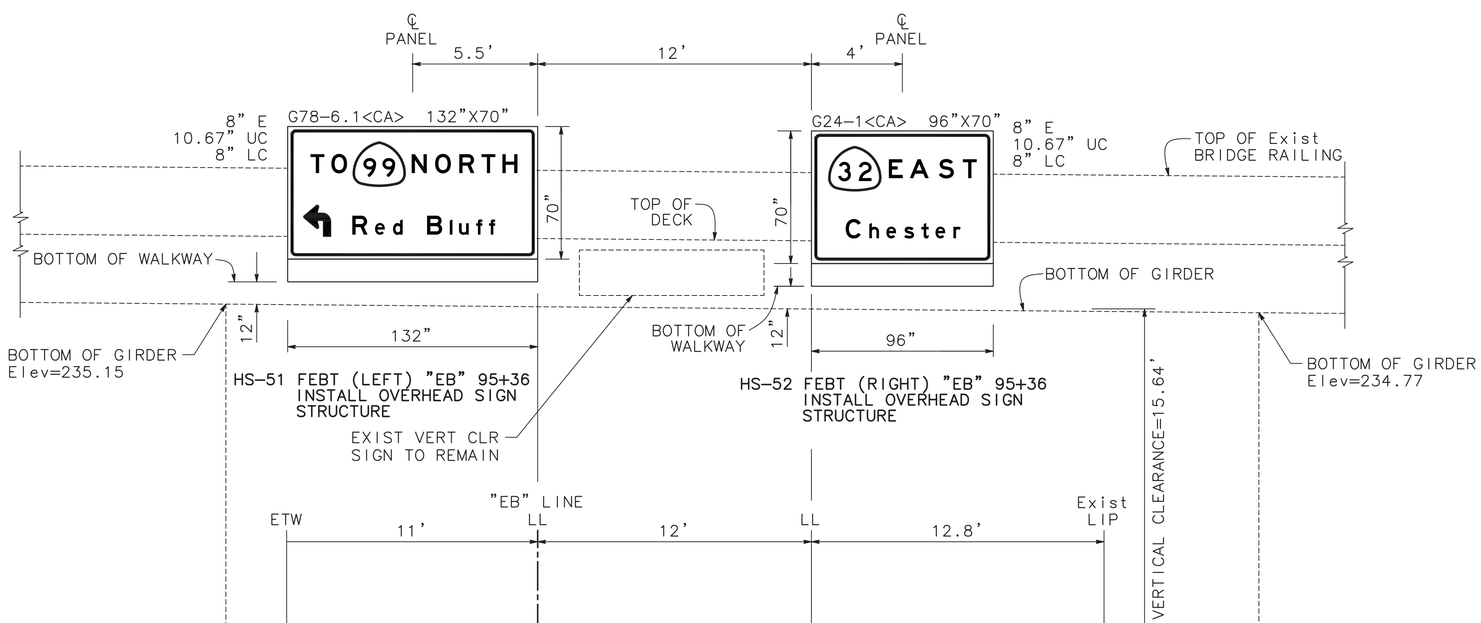

SIGN DETAILS

NO SCALE

SD-2

STATE OF CALIFORNIA - DEPARTMENT OF TRANSPORTATION
Caltrans

CONSULTANT FUNCTIONAL SUPERVISOR: JAMES MARSHALL PANGBURN
CALCULATED-DESIGNED BY: E. WEEKS
CHECKED BY: J. PANGBURN
REVISED BY
DATE REVISED

PATH: V:\Chico-55-0131-SR32 Widening\CADD\Phase 2 - SR 99 to East\FEPM\Mainline\SD\Dwg\
PLOT DATE: Nov 18, 2015-08:54:02am
CAD USER: kfriedrich

LAST REVISION 00-00-00
DATE PLOTTED => $DATE
TIME PLOTTED => $TIME

BORDER LAST REVISED 7/2/2010
USERNAME => $USER
DGN FILE => $REQUEST
RELATIVE BORDER SCALE IS IN INCHES 0 1 2 3
UNIT 0000
PROJECT NUMBER & PHASE 0313000246

Dist	COUNTY	ROUTE	POST MILES TOTAL PROJECT	SHEET No.	TOTAL SHEETS
03	But	32	10.1/10.5	66	126

11-6-15
REGISTERED CIVIL ENGINEER DATE

NOVEMBER 13, 2015
PLANS APPROVAL DATE

REGISTERED PROFESSIONAL ENGINEER
JULIA ANN PASSALACQUA
No. C68407
Exp. 9/30/17
CIVIL
STATE OF CALIFORNIA

THE STATE OF CALIFORNIA OR ITS OFFICERS OR AGENTS SHALL NOT BE RESPONSIBLE FOR THE ACCURACY OR COMPLETENESS OF SCANNED COPIES OF THIS PLAN SHEET.

MARK THOMAS & CO., INC.
7300 FOLSOM BLVD STE 203
SACRAMENTO, CA 95826

CITY OF CHICO
CAPITAL PROJECT SERVICES
411 MAIN STREET
CHICO, CA 95927

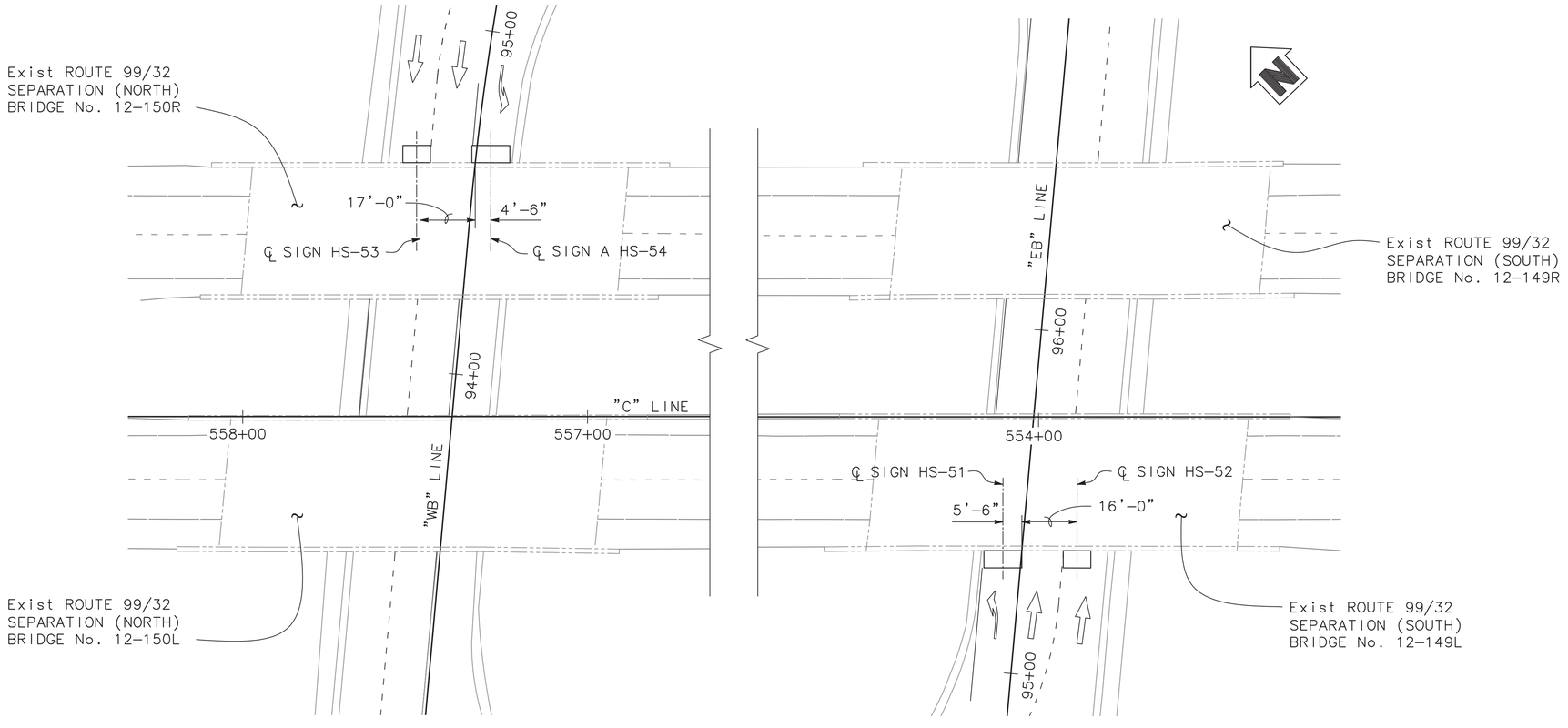

LOCATION PLAN
1" = 20'

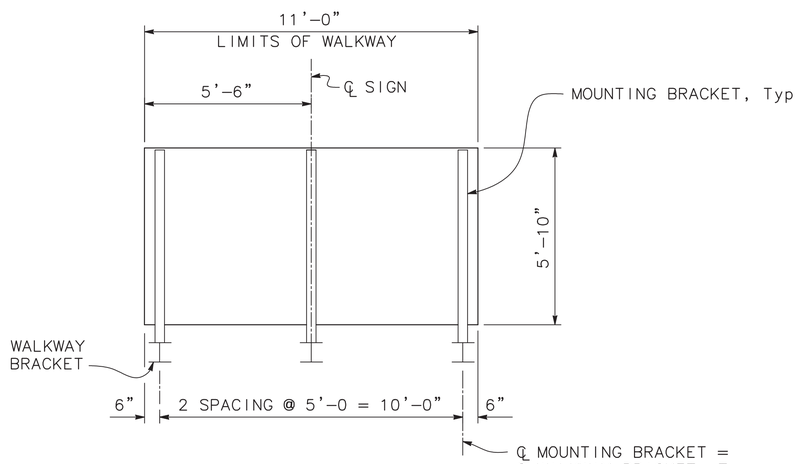

SIGN HS-54
NOTE: SIGN HS-54 SHOWN, SIGN HS-51 SIMILAR

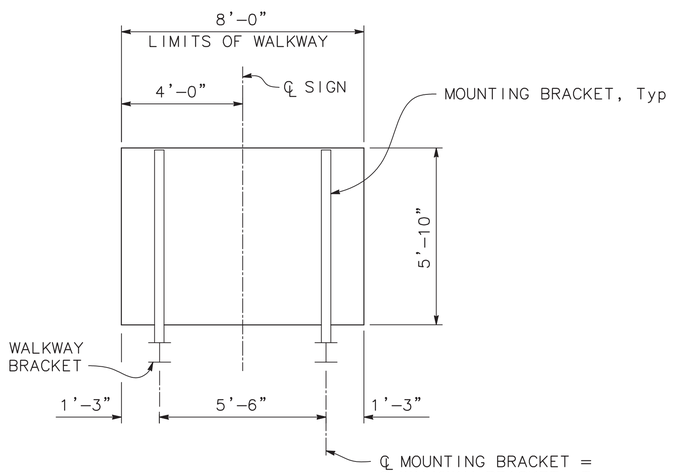

SIGN HS-53
NOTE: SIGN HS-53 SHOWN, SIGN HS-52 SIMILAR

MOUNTING BRACKET ASSEMBLY SPACING
NO SCALE

NOTES:
1. TOP OF SIGN IS PARALLEL TO DECK.
2. THE CONTRACTOR SHALL VERIFY ALL CONTROLLING FIELD DIMENSIONS BEFORE ORDERING OR FABRICATING ANY MATERIAL.

SIGN DETAILS
SD-3

REVISED BY | DATE REVISED
V. SHERBY | J. PASSALACQUA
CALCULATED-DESIGNED BY | CHECKED BY
CONSULTANT FUNCTIONAL SUPERVISOR: JULIA ANN PASSALACQUA
STATE OF CALIFORNIA - DEPARTMENT OF TRANSPORTATION
Caltrans

LAST REVISION 00-00-00
DATE PLOTTED => $DATE
TIME PLOTTED => $TIME

BORDER LAST REVISED 7/2/2010
USERNAME => $USER
DGN FILE => $REQUEST
RELATIVE BORDER SCALE IS IN INCHES 0 1 2 3
UNIT 0000
PROJECT NUMBER & PHASE 0313000246

Dist	COUNTY	ROUTE	POST MILES TOTAL PROJECT	SHEET No.	TOTAL SHEETS
03	But	32	10.1/10.5	67	126

11-6-15
REGISTERED CIVIL ENGINEER DATE

JULIA ANN PASSALACQUA No. C68407 Exp. 9/30/17 CIVIL — REGISTERED PROFESSIONAL ENGINEER — STATE OF CALIFORNIA

NOVEMBER 13, 2015
PLANS APPROVAL DATE

THE STATE OF CALIFORNIA OR ITS OFFICERS OR AGENTS SHALL NOT BE RESPONSIBLE FOR THE ACCURACY OR COMPLETENESS OF SCANNED COPIES OF THIS PLAN SHEET.

MARK THOMAS & CO., INC.
7300 FOLSOM BLVD STE 203
SACRAMENTO, CA 95826

CITY OF CHICO
CAPITAL PROJECT SERVICES
411 MAIN STREET
CHICO, CA 95927

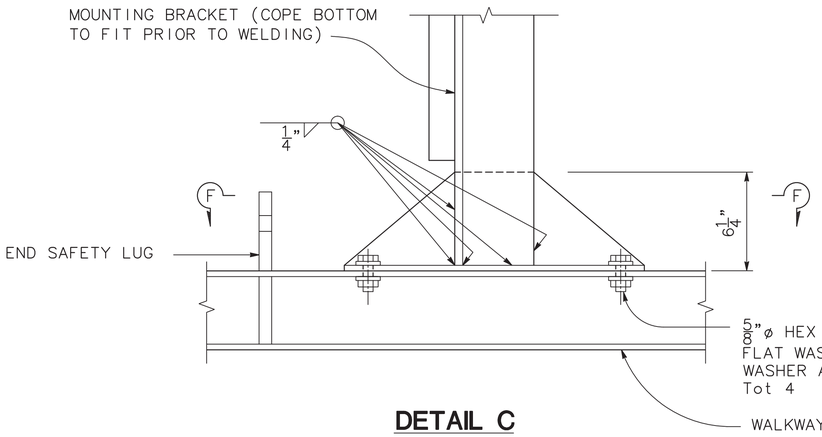

DETAIL C
NO SCALE

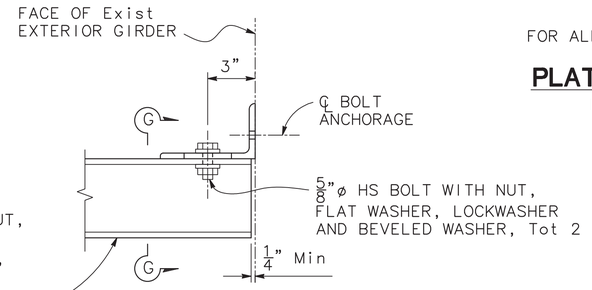

DETAIL B
NO SCALE

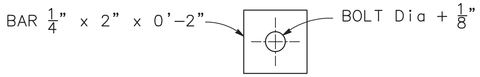

FOR ALL SLOTTED HOLES

PLATE WASHER
NO SCALE

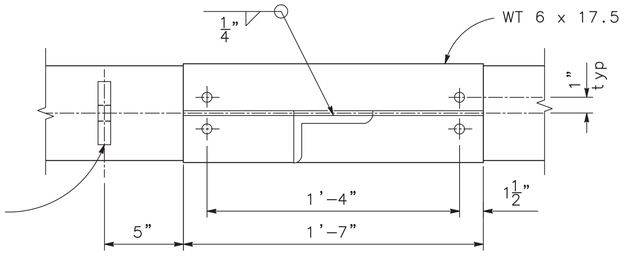

SECTION F-F
NO SCALE

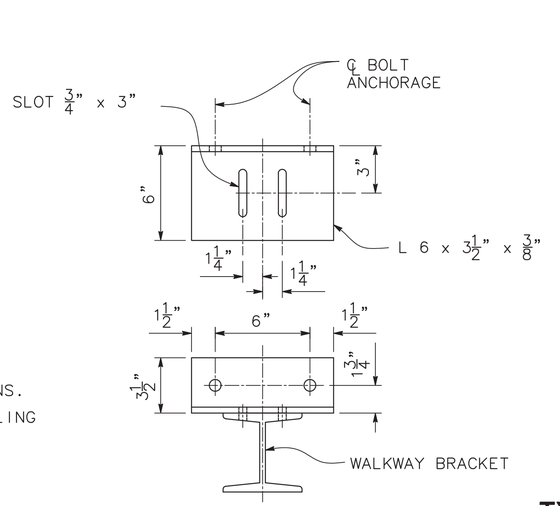

SECTION G-G
NO SCALE

NOTES:

1. FOR DETAILS NOT SHOWN, SEE STANDARD PLANS.
2. THE CONTRACTOR SHALL VERIFY ALL CONTROLLING FIELD DIMENSIONS BEFORE ORDERING OR FABRICATING ANY MATERIAL.
3. ALL STEEL SHALL BE GALVANIZED AFTER FABRICATION.
4. FOR DETAIL A, SEE "SD-5" SHEET.
5. FOR SECTIONS D-D & E-E, SEE "SD-5" SHEET.

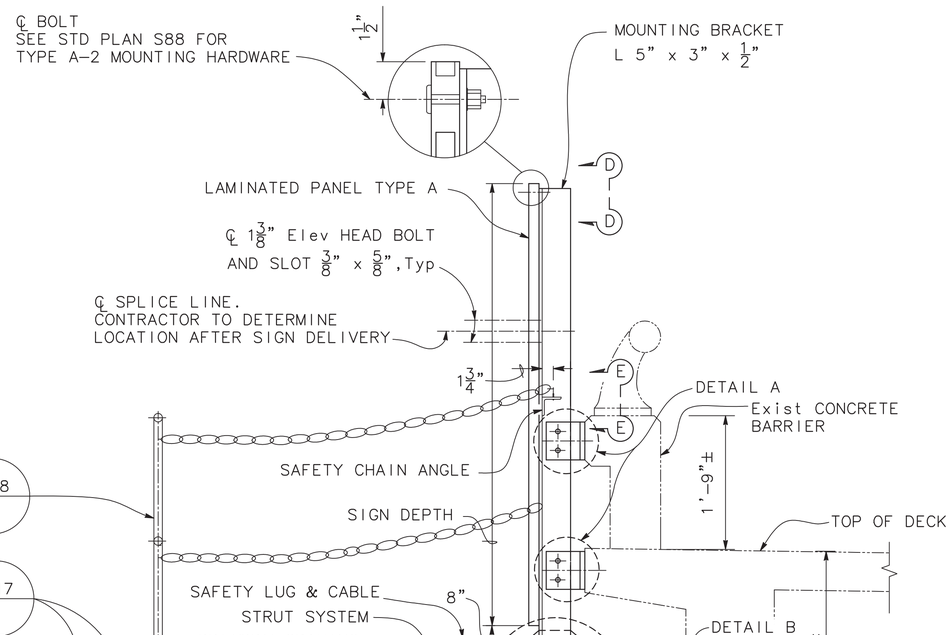

TYPICAL MOUNTING BRACKET ASSEMBLY (END VIEW)
1" = 1'- 0"

S16 S17 S17A S18 S19 S88

SIGN DETAILS
SD-4

STATE OF CALIFORNIA - DEPARTMENT OF TRANSPORTATION
Caltrans
CONSULTANT FUNCTIONAL SUPERVISOR: JULIA ANN PASSALACQUA
CALCULATED-DESIGNED BY: V. SHERBY
CHECKED BY: J. PASSALACQUA
REVISED BY
DATE REVISED
LAST REVISION 00-00-00
DATE PLOTTED => $DATE
TIME PLOTTED => $TIME

BORDER LAST REVISED 7/2/2010
USERNAME => $USER
DGN FILE => $REQUEST
RELATIVE BORDER SCALE IS IN INCHES 0 1 2 3
UNIT 0000
PROJECT NUMBER & PHASE 0313000246

Dist	COUNTY	ROUTE	POST MILES TOTAL PROJECT	SHEET No.	TOTAL SHEETS
03	But	32	10.1/10.5	68	126

11-6-15
REGISTERED CIVIL ENGINEER DATE

REGISTERED PROFESSIONAL ENGINEER
JULIA ANN PASSALACQUA
No. C68407
Exp. 9/30/17
CIVIL
STATE OF CALIFORNIA

NOVEMBER 13, 2015
PLANS APPROVAL DATE

THE STATE OF CALIFORNIA OR ITS OFFICERS OR AGENTS SHALL NOT BE RESPONSIBLE FOR THE ACCURACY OR COMPLETENESS OF SCANNED COPIES OF THIS PLAN SHEET.

MARK THOMAS & CO., INC.
7300 FOLSOM BLVD STE 203
SACRAMENTO, CA 95826

CITY OF CHICO
CAPITAL PROJECT SERVICES
411 MAIN STREET
CHICO, CA 95927

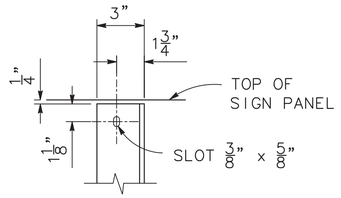

SECTION D-D
NO SCALE

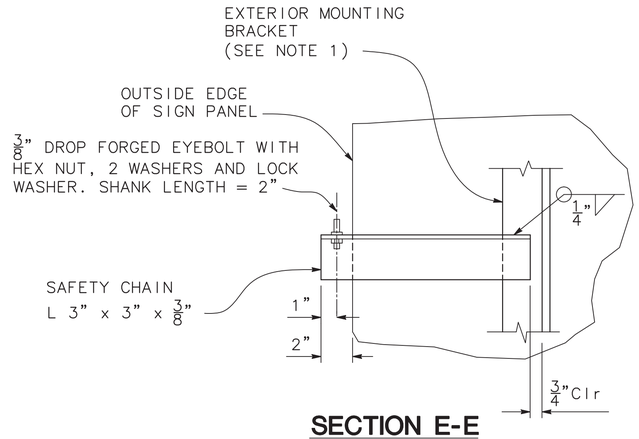

SECTION E-E
NO SCALE

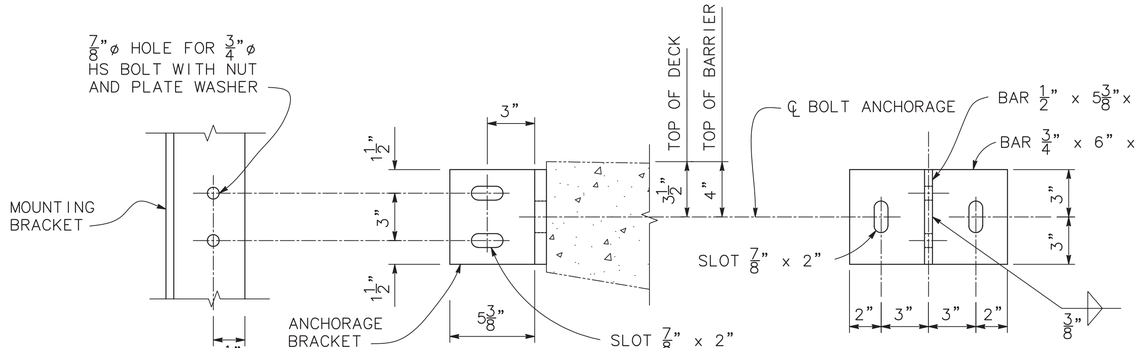

DETAIL A
NO SCALE

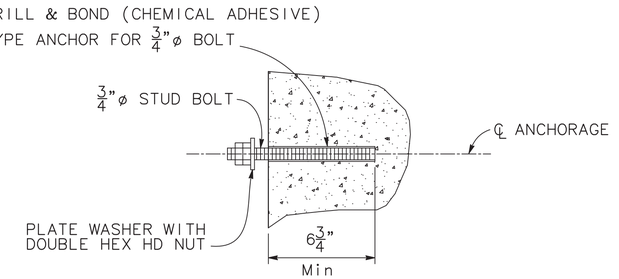

DRILL & BOND (CHEMICAL ADHESIVE) BOLT ANCHORAGE
NO SCALE

NOTES:

1. THE EXTERIOR MOUNTING BRACKET TO FACE OUTWARD TO ACCOMMODATE THE WALKWAY CHAIN ANGLE.
2. THE CONTRACTOR SHALL VERIFY ALL CONTROLLING FIELD DIMENSIONS BEFORE ORDERING OR FABRICATING ANY MATERIAL.
3. CONTRACTOR TO PROVIDE ANCHOR BOLT LAYOUT BEFORE ANCHOR BOLTS ARE PLACED.
4. FOR LOCATION OF DETAIL A, SEE "SD-4" SHEET.
5. FOR LOCATIONS OF SECTION D-D & E-E, SEE "SD-4" SHEET.

SIGN DETAILS
SD-5

REVISED BY	DATE REVISED

CALCULATED-DESIGNED BY: V. SHERBY
CHECKED BY: J. PASSALACQUA
CONSULTANT FUNCTIONAL SUPERVISOR: JULIA ANN PASSALACQUA
STATE OF CALIFORNIA - DEPARTMENT OF TRANSPORTATION
Caltrans

LAST REVISION 00-00-00 | DATE PLOTTED => $DATE | TIME PLOTTED => $TIME

BORDER LAST REVISED 7/2/2010
USERNAME => $USER
DGN FILE => $REQUEST
RELATIVE BORDER SCALE IS IN INCHES 0 1 2 3
UNIT 0000
PROJECT NUMBER & PHASE 0313000246

NOTE: ALL SIGN PANEL DIMENSIONS ARE IN INCHES.

Dist	COUNTY	ROUTE	POST MILES TOTAL PROJECT	SHEET No.	TOTAL SHEETS
03	But	32	10.1/10.5	69	126

11-6-15
REGISTERED CIVIL ENGINEER DATE

NOVEMBER 13, 2015
PLANS APPROVAL DATE

JAMES MARSHALL PANGBURN No. 71445 Exp. 12/31/15 CIVIL — REGISTERED PROFESSIONAL ENGINEER — STATE OF CALIFORNIA

THE STATE OF CALIFORNIA OR ITS OFFICERS OR AGENTS SHALL NOT BE RESPONSIBLE FOR THE ACCURACY OR COMPLETENESS OF SCANNED COPIES OF THIS PLAN SHEET.

MARK THOMAS & CO., INC.
7300 FOLSOM BLVD STE 203
SACRAMENTO, CA 95826

CITY OF CHICO
CAPITAL PROJECT SERVICES
411 MAIN STREET
CHICO, CA 95927

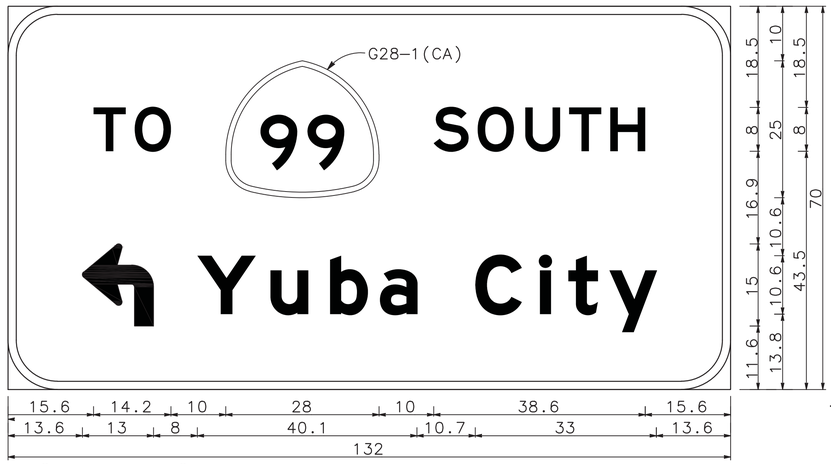

G78-6.1(CA)
HS-54

9.0" Radius, 1.5" Border, White on Green;
[TO] E; [SOUTH] E; 90 Deg Advanced Turn Arrow 13.0" X 15.0"; [Yuba City] E Mod;

G24-1(CA)
HS-53

9.0" Radius, 1.5" Border, White on Green;
[WEST] E; [Orland] E Mod;

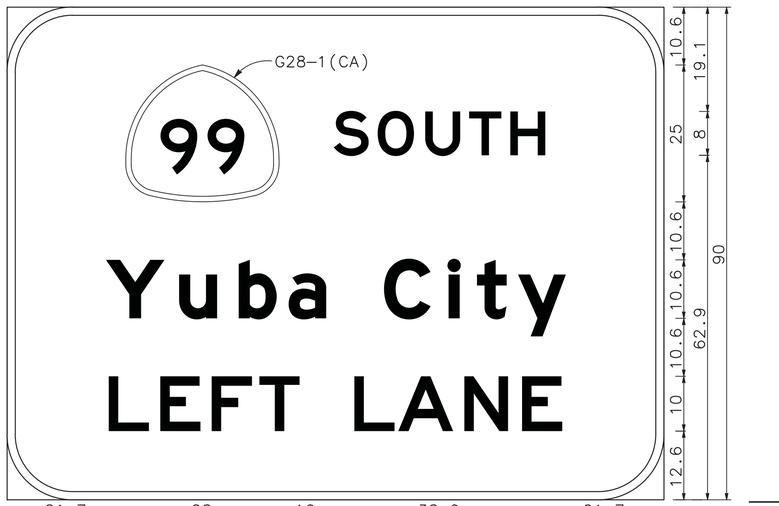

G20-6(CA)
HS-55

12.0" Radius, 1.5" Border, White on Green;
[SOUTH] E; [Yuba City] E Mod; [LEFT LANE] E;

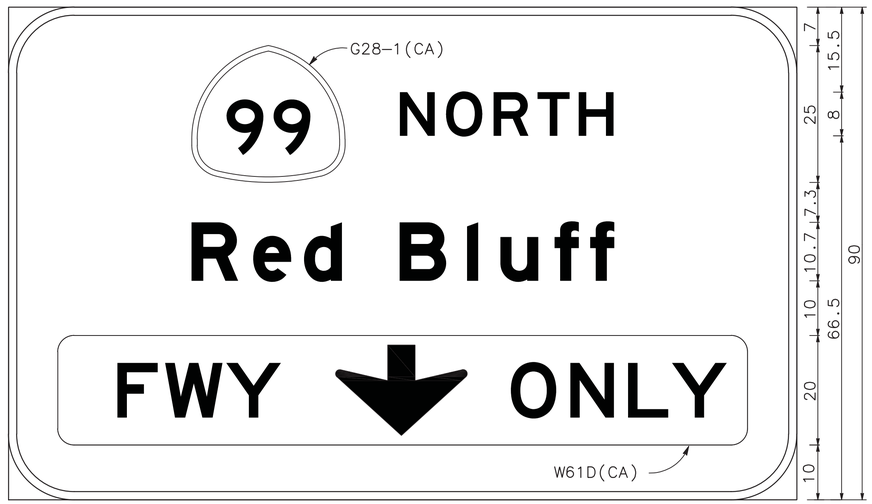

G24-5(CA)
HS-55
HS-56

12.0" Radius, 1.5" Border, White on Green;
[NORTH] E; [Red Bluff] E Mod;

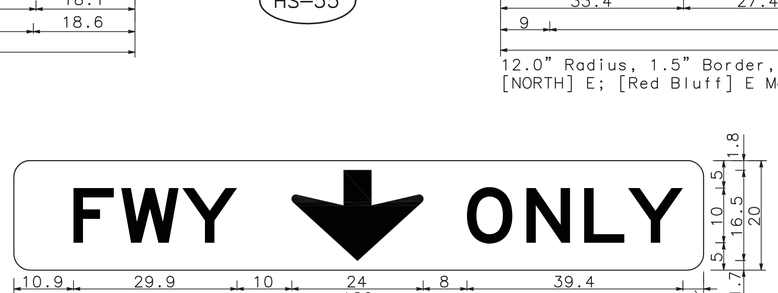

W61D(CA)

3.0" Radius, No Border, Yellow;
[FWY] Black E; Down Arrow 16.0" 270 Black;
[ONLY] Black E;

SIGN DETAILS
SD-6

REVISED BY | DATE REVISED
E. WEEKS | J. PANGBURN
CALCULATED-DESIGNED BY | CHECKED BY
CONSULTANT FUNCTIONAL SUPERVISOR
JAMES MARSHALL PANGBURN
STATE OF CALIFORNIA - DEPARTMENT OF TRANSPORTATION
Caltrans

LAST REVISION 00-00-00 | DATE PLOTTED => $DATE | TIME PLOTTED => $TIME

BORDER LAST REVISED 7/2/2010
USERNAME => $USER
DGN FILE => $REQUEST
RELATIVE BORDER SCALE IS IN INCHES 0 1 2 3
UNIT 0000
PROJECT NUMBER & PHASE 0313000246

NOTE: ALL SIGN PANEL DIMENSIONS ARE IN INCHES.

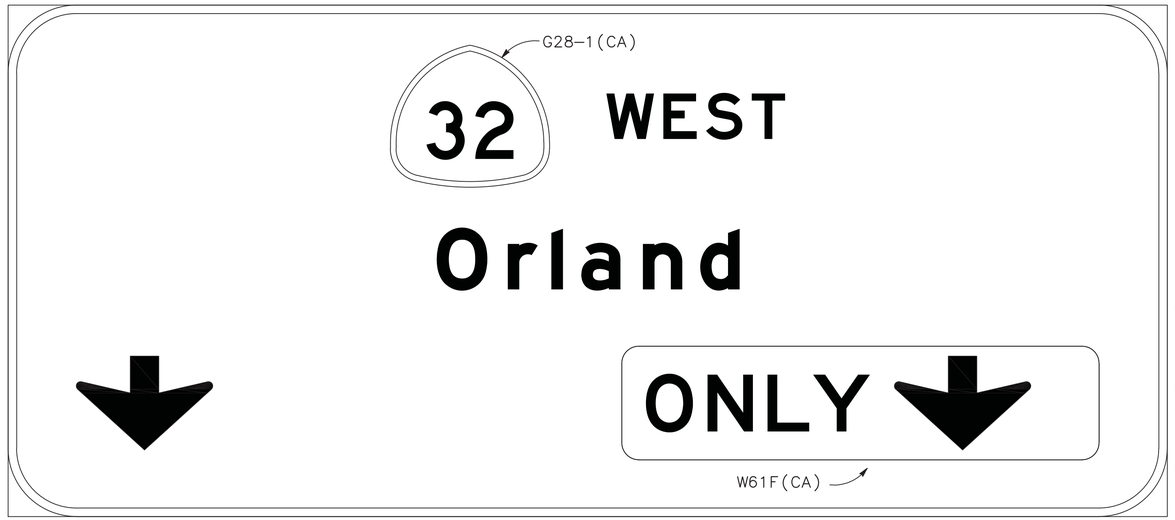

12.0" Radius, 1.5" Border, White on Green;
[WEST] E; [Orland] E Mod; Down Arrow 16.0" 270°;

G24-6(CA)

HS-56

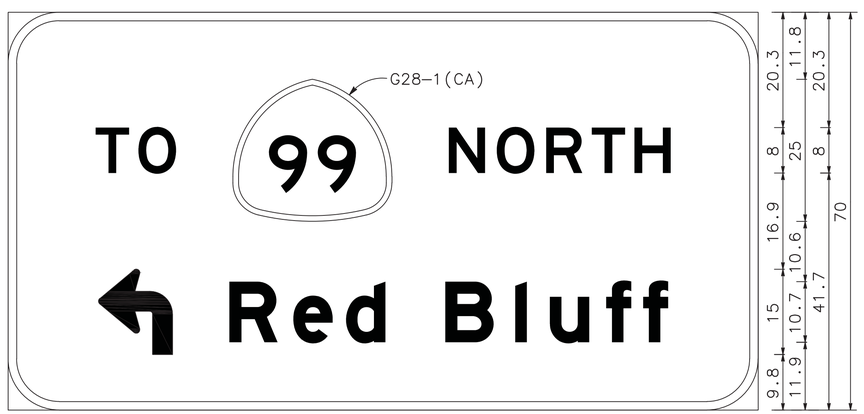

9.0" Radius, 1.5" Border, White on Green;
[TO] E; [NORTH] E; 90 Deg Advanced Turn Arrow 13.0" X 15.0"; [Red Bluff] E Mod;

G78-6.1(CA)

HS-51

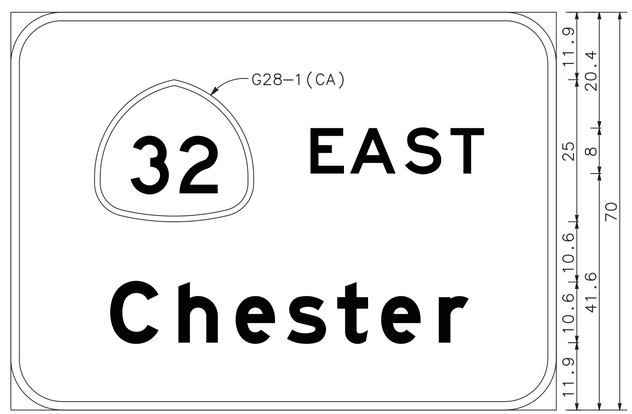

9.0" Radius, 1.5" Border, White on Green;
[EAST] E; [Chester] E Mod;

G24-1(CA)

HS-52

Dist	COUNTY	ROUTE	POST MILES TOTAL PROJECT	SHEET No.	TOTAL SHEETS
03	But	32	10.1/10.5	70	126

11-6-15
REGISTERED CIVIL ENGINEER DATE

NOVEMBER 13, 2015
PLANS APPROVAL DATE

REGISTERED PROFESSIONAL ENGINEER
JAMES MARSHALL PANGBURN
No. 71445
Exp. 12/31/15
CIVIL
STATE OF CALIFORNIA

THE STATE OF CALIFORNIA OR ITS OFFICERS OR AGENTS SHALL NOT BE RESPONSIBLE FOR THE ACCURACY OR COMPLETENESS OF SCANNED COPIES OF THIS PLAN SHEET.

MARK THOMAS & CO., INC.
7300 FOLSOM BLVD STE 203
SACRAMENTO, CA 95826

CITY OF CHICO
CAPITAL PROJECT SERVICES
411 MAIN STREET
CHICO, CA 95927

SIGN DETAILS
SD-7

REVISED BY: E. WEEKS
DATE REVISED:
CALCULATED-DESIGNED BY: J. PANGBURN
CHECKED BY:
CONSULTANT FUNCTIONAL SUPERVISOR: JAMES MARSHALL PANGBURN
STATE OF CALIFORNIA - DEPARTMENT OF TRANSPORTATION
Caltrans

LAST REVISION 00-00-00
DATE PLOTTED => $DATE
TIME PLOTTED => $TIME

BORDER LAST REVISED 7/2/2010
USERNAME => $USER
DGN FILE => $REQUEST
RELATIVE BORDER SCALE IS IN INCHES 0 1 2 3
UNIT 0000
PROJECT NUMBER & PHASE 0313000246

NOTE: ALL SIGN PANEL DIMENSIONS ARE IN INCHES.

Dist	COUNTY	ROUTE	POST MILES TOTAL PROJECT	SHEET No.	TOTAL SHEETS
03	But	32	10.1/10.5	71	126

11-6-15
REGISTERED CIVIL ENGINEER DATE

NOVEMBER 13, 2015
PLANS APPROVAL DATE

JAMES MARSHALL PANGBURN No. 71445 Exp. 12/31/15 CIVIL — REGISTERED PROFESSIONAL ENGINEER — STATE OF CALIFORNIA

THE STATE OF CALIFORNIA OR ITS OFFICERS OR AGENTS SHALL NOT BE RESPONSIBLE FOR THE ACCURACY OR COMPLETENESS OF SCANNED COPIES OF THIS PLAN SHEET.

MARK THOMAS & CO., INC.
7300 FOLSOM BLVD STE 203
SACRAMENTO, CA 95826

CITY OF CHICO
CAPITAL PROJECT SERVICES
411 MAIN STREET
CHICO, CA 95927

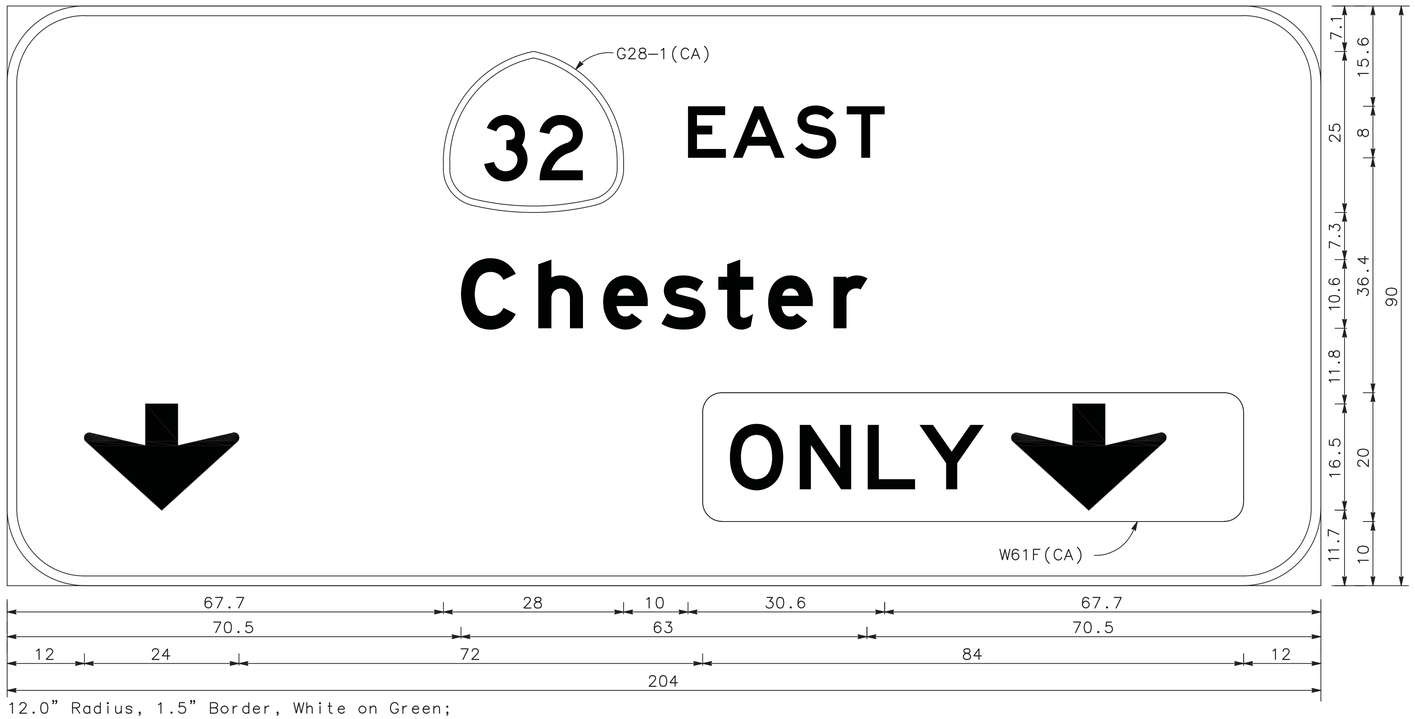

G24-6(CA)
HS-57

12.0" Radius, 1.5" Border, White on Green;
[EAST] E; [Chester] E Mod; Down Arrow 16.0" 270°;

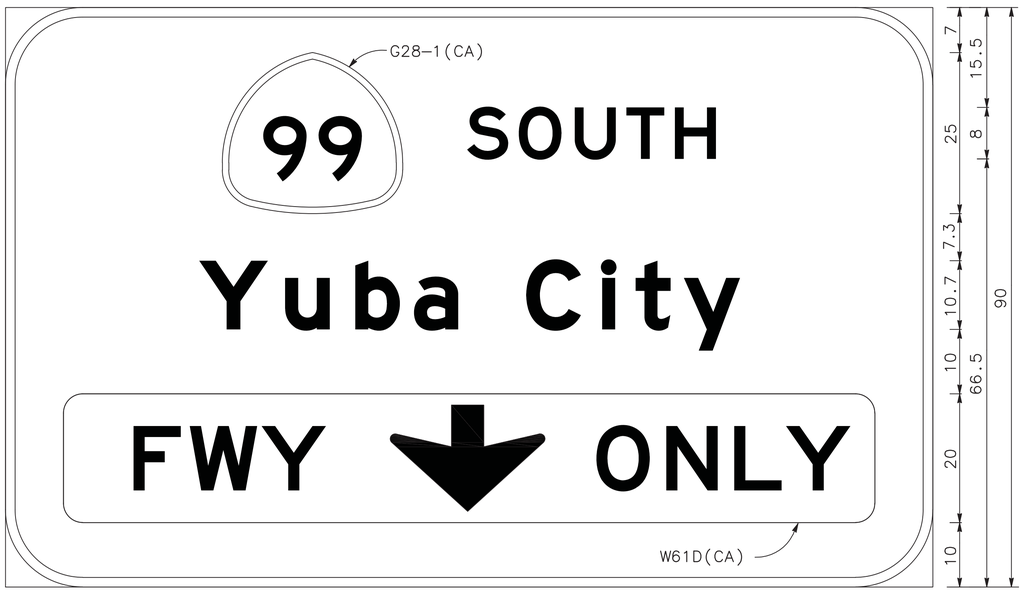

G24-5(CA)
HS-57

12.0" Radius, 1.5" Border, White on Green;
[SOUTH] E; [Yuba City] E Mod;

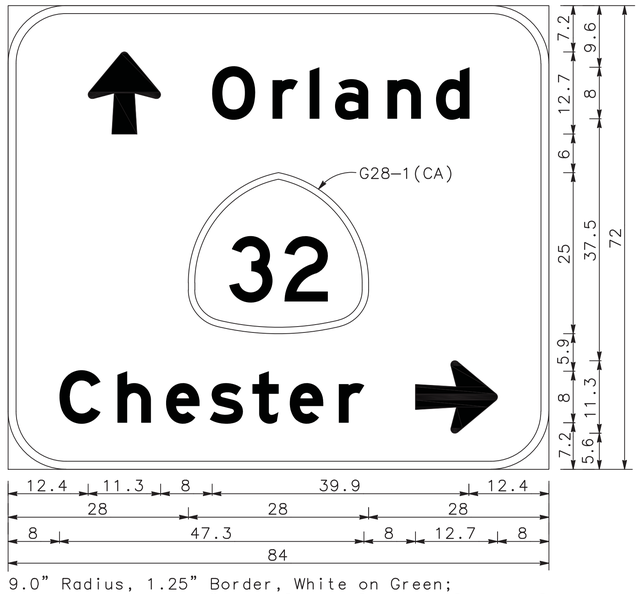

G77-5.2(CA)
1-40

9.0" Radius, 1.25" Border, White on Green;
Arrow 8UC-1L - 12.8" 90°; [Orland] E Mod; [Chester] E Mod; Arrow 8UC-1L - 12.8" 0°;

SIGN DETAILS
SD-8

REVISED BY	DATE REVISED
E. WEEKS	J. PANGBURN

CALCULATED-DESIGNED BY | CHECKED BY

CONSULTANT FUNCTIONAL SUPERVISOR: JAMES MARSHALL PANGBURN

STATE OF CALIFORNIA - DEPARTMENT OF TRANSPORTATION
Caltrans

LAST REVISION 00-00-00 | DATE PLOTTED => $DATE | TIME PLOTTED => $TIME

BORDER LAST REVISED 7/2/2010 | USERNAME => $USER | DGN FILE => $REQUEST | RELATIVE BORDER SCALE IS IN INCHES 0 1 2 3 | UNIT 0000 | PROJECT NUMBER & PHASE 0313000246

NOTE: ALL SIGN PANEL DIMENSIONS ARE IN INCHES.

Dist	COUNTY	ROUTE	POST MILES TOTAL PROJECT	SHEET No.	TOTAL SHEETS
03	But	32	10.1/10.5	72	126

11-6-15
REGISTERED CIVIL ENGINEER DATE

JAMES MARSHALL PANGBURN
No. 71445
Exp. 12/31/15
CIVIL
REGISTERED PROFESSIONAL ENGINEER
STATE OF CALIFORNIA

NOVEMBER 13, 2015
PLANS APPROVAL DATE

THE STATE OF CALIFORNIA OR ITS OFFICERS OR AGENTS SHALL NOT BE RESPONSIBLE FOR THE ACCURACY OR COMPLETENESS OF SCANNED COPIES OF THIS PLAN SHEET.

MARK THOMAS & CO., INC.
7300 FOLSOM BLVD STE 203
SACRAMENTO, CA 95826

CITY OF CHICO
CAPITAL PROJECT SERVICES
411 MAIN STREET
CHICO, CA 95927

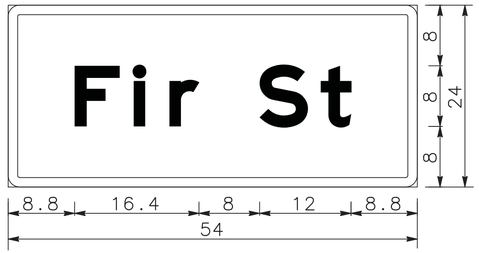

G7-1(CA)
1-43

1.5" Radius, 1.25" Border, White on Green;
[Fir St] E Mod;

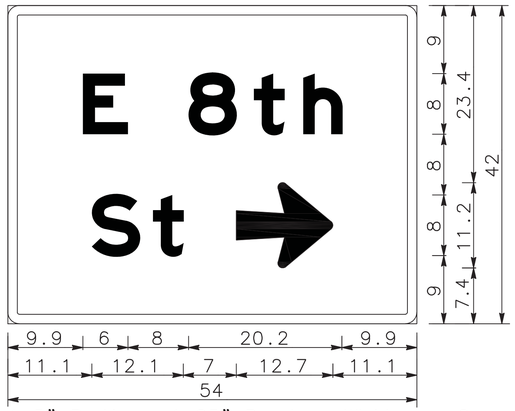

G8-22(CA)
1-81

1.5" Radius, 1.25" Border, White on Green;
[E 8th] E Mod; [St] E Mod; Arrow 8UC-1L - 12.8" 0°;

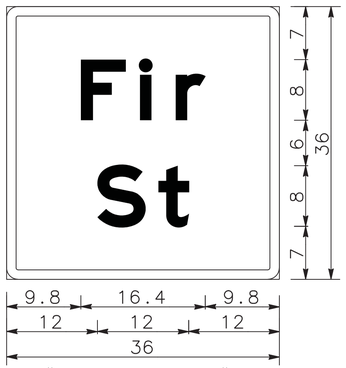

G7-1(CA)
1-64

1.5" Radius, 1.25" Border, White on Green;
[Fir] E Mod; [St] E Mod;

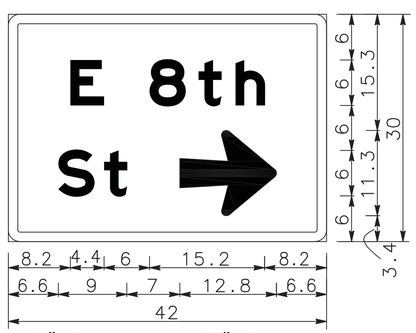

G8-22(CA)
1-56

1.5" Radius, 1.25" Border, White on Green;
[E 8th] E Mod; [St] E Mod;
Arrow 6CAP-1L - 12.8" 0°;

SIGN DETAILS
SD-9

STATE OF CALIFORNIA - DEPARTMENT OF TRANSPORTATION
Caltrans
CONSULTANT FUNCTIONAL SUPERVISOR: JAMES MARSHALL PANGBURN
CALCULATED-DESIGNED BY: E. WEEKS
CHECKED BY: J. PANGBURN
REVISED BY
DATE REVISED

LAST REVISION 00-00-00
DATE PLOTTED => $DATE
TIME PLOTTED => $TIME

BORDER LAST REVISED 7/2/2010
USERNAME => $USER
DGN FILE => $REQUEST
RELATIVE BORDER SCALE IS IN INCHES 0 1 2 3
UNIT 0000
PROJECT NUMBER & PHASE 0313000246

ROADSIDE SIGN QUANTITIES

SIGN NUMBER sht-No	CALIFORNIA CODE	MUTCD CODE	PANEL SIZE (in)	"C" DIM IN FEET	POST SIZE AND LENGTH 4"x4"	POST SIZE AND LENGTH 4"x6"	POST SIZE AND LENGTH 6"x6"	ROADSIDE SIGN ONE POST EA	ROADSIDE SIGN TWO POST EA	INSTALL SIGN (SSBM) EA	REMOVE ROADSIDE SIGN EA	RELOCATE ROADSIDE SIGN EA	REMARKS
1-1		I-7											SIGN TO REMAIN
	G97A												
	G33-1 (Rt)												
1-2		D9-11										1	
		D9-9											
	G33-1 (Rt)												
1-3		R6-1L											SIGN TO REMAIN
		R6-1R											
1-4		R3-2	24x24	5		14		1					
		R6-1R	54x18	1.5									FACES NORTH
1-5		R5-1	36x36										
		R5-1a	36x24	2		12		1					
1-6		R6-1L	54x18		8			1					FACES EAST
		R6-1R	54x18	1.5									FACES WEST
1-7		R5-1											SIGN TO REMAIN
		R5-1a											
1-8		R3-1										1	
1-9		R3-2	36x36	7						1			SEE NOTE 6
1-10		R9-3a	24x24	5			20	1					FACES NORTH
	R96B(Rt)		24x16										FACES NORTH
		R9-3a	24x24										FACES WEST
	R96B(Lt)		24x16										FACES WEST
		R6-1R	54x18	1.5									FACES NORTH
1-11		R3-2	24x24	7		16		1					
		R6-2R	24x30										
1-12		R6-1L	54x18	1.5	8			1					FACES WEST
		R6-1R	54x18										FACES EAST
1-13	G72											1	EXIST SSBM INSTALLATION; SEE NOTE 9
	G66-57												
1-14	W34C(Lt)											1	
1-15		D4-2L											SIGN TO REMAIN
1-16		R3-1	24X24	5		14		1					
		R6-1L	54x18	1.5									FACES NORTH
1-17		R9-3a	24x24	5			20	1					FACES WEST
	R96B(Rt)		24x16										FACES WEST
		R9-3a	24x24										FACES SOUTH
	R96B(Lt)		24x16										FACES SOUTH
		R6-1R	54x18										FACES WEST
1-18		R6-1L											SIGN TO REMAIN
1-19	G77-4												SIGN TO REMAIN
	G8-1												
	G66-56												
		M6-4											
	G92												
1-20		R5-1											SIGN TO REMAIN
		R5-1a											
1-21	G92												SIGN TO REMAIN
	G28-2(99)												
		M3-3											
		M6-2											
1-22		R3-1	36x36	12						1			SEE NOTE 6
1-23	G92												SIGN TO REMAIN
	G28-2												
		M3-3											
		M6-2											
1-24	W12-2												SIGN TO REMAIN
1-25		R2-1(35)	36x48	7		16		1					
1-26		R2-1(35)	36x48	7		16		1					
SHEET TOTAL								10	0	2	0	4	

Dist	COUNTY	ROUTE	POST MILES TOTAL PROJECT	SHEET No.	TOTAL SHEETS
03	But	32	10.1/10.5	73	126

11-6-15
REGISTERED CIVIL ENGINEER DATE

NOVEMBER 13, 2015
PLANS APPROVAL DATE

REGISTERED PROFESSIONAL ENGINEER — JAMES MARSHALL PANGBURN — No. 71445 — Exp. 12/31/15 — CIVIL — STATE OF CALIFORNIA

THE STATE OF CALIFORNIA OR ITS OFFICERS OR AGENTS SHALL NOT BE RESPONSIBLE FOR THE ACCURACY OR COMPLETENESS OF SCANNED COPIES OF THIS PLAN SHEET.

MARK THOMAS & CO., INC.
7300 FOLSOM BLVD STE 203
SACRAMENTO, CA 95826

CITY OF CHICO
CAPITAL PROJECT SERVICES
411 MAIN STREET
CHICO, CA 95927

NOTES:

1. EXACT LOCATION AND POSITION OF ROADSIDE SIGNS TO BE DETERMINED BY THE ENGINEER.
2. POST SIZES AND LENGTHS GIVEN ARE APPROXIMATE.
3. "C" = VERTICAL CLEARANCE AT EP TO BOTTOM OF SIGN PANEL.
4. (N) = NOT A SEPARATE PAY ITEM. FOR INFORMATION PURPOSES ONLY.
5. SIGN PANEL TO BE MOUNTED ON SIGNAL MAST ARM.
6. SIGN PANEL TO BE MOUNTED ON SIGNAL STANDARD.
7. SEE SIGNAL AND LIGHTING PLANS.
8. SIGN PANEL TO BE MOUNTED ON SIGNAL STANDARD DIRECTLY ABOVE THE SIGNAL MAST ARM CONNECTION.
9. SIGN PANEL TO BE MOUNTED ON OVERHEAD SIGN POST.

SIGN QUANTITIES
SQ-1

REVISED BY: E. WEEKS | DATE REVISED | CALCULATED-DESIGNED BY: J. PANGBURN | CHECKED BY
CONSULTANT FUNCTIONAL SUPERVISOR: JAMES MARSHALL PANGBURN
STATE OF CALIFORNIA - DEPARTMENT OF TRANSPORTATION

LAST REVISION: DATE PLOTTED => $DATE; TIME PLOTTED => $TIME; 00-00-00

BORDER LAST REVISED 7/2/2010 | USERNAME => $USER | DGN FILE => $REQUEST | RELATIVE BORDER SCALE IS IN INCHES 0 1 2 3 | UNIT 0000 | PROJECT NUMBER & PHASE 0313000246

PATH: V:\Chico-55-0131-SR32 Widening\CADD\Phase 2 - SR 99 to East\FUNCTIONAL\Sheets\SQ-1.dgn | PLOT DATE: Nov 18, 2015-09:12:03am | CAD USER: kfriedrich

ROADSIDE SIGN QUANTITIES

SIGN NUMBER sht-No	CALIFORNIA CODE	MUTCD CODE	PANEL SIZE (in)	"C" DIM IN FEET	POST SIZE AND LENGTH 4"x4"	POST SIZE AND LENGTH 4"x6"	POST SIZE AND LENGTH 6"x6"	ROADSIDE SIGN ONE POST EA	ROADSIDE SIGN TWO POST EA	INSTALL SIGN (SSBM) EA	REMOVE ROADSIDE SIGN EA	RELOCATE ROADSIDE SIGN EA	REMARKS
1-27		R9-3a	24x24	5			20	1					FACES EAST
	R96B(Rt)		24x16										FACES EAST
		R9-3a	24x24										FACES NORTH
	R96B(Lt)		24x16										FACES NORTH
		R6-1R	54x18	1.5									FACES EAST
1-28		R6-1R										1	
1-29		I-7	24x24	5	12			1					
	G97A		24x6										
	G33-1(Lt)		24x6										
1-30		R9-3a	24x24	5			20	1					FACES SOUTH
	R96B(Rt)		24x16										FACES SOUTH
		R9-3a	24x24										FACES EAST
	R96B(Lt)		24x16										FACES EAST
		R6-1R	54x18	1.5									FACES SOUTH
1-31		R3-2	36x36										SEE NOTES 4, 5, AND 7
1-32		R3-1	24x24	7	14			1					
1-33		D4-2											SIGN TO REMAIN
1-34		R6-1L	54x18	1.5	8			1					FACES WEST
		R6-1R	54x18										FACES EAST
1-35		R5-1											SIGN TO REMAIN
		R5-1a											
1-36		R3-2	24x24	5		16		1					
		R6-1R	54x18	1.5									FACES SOUTH
1-37		I-7	24x24	5	14			1					
	G97A		24x6										
		M6-3	21x15										
1-38	G72											1	
	G66-57												
1-39		D4-2R											SIGN TO REMAIN
1-40	G77-5.2		84x72	5			18		1				
1-41		R5-10c	24x12	5	10			1					
1-42		R5-1	36x36	2		16		1					
		R5-1a	36x24										
1-43	G7-1		54x24	7		16		1					
	G66-57		24x24										
	G33-1(Lt)		24x6										
1-44		R6-1R	54x18	1.5	8			1					
1-45		R3-2	24x24	5	12			1					
1-46													NOT USED
1-47		D4-2L	30x36	7		16		1					
1-48		R-1											SIGN TO REMAIN
		R6-1L											
1-49		R3-1	24x24	7		16		1					
		R6-2L	24x30										
1-50		R3-2	24x24	7		16		1					
		R6-2R	24x30										
1-51	R61-34		48x30										SEE NOTES 4, 5, AND 7
1-52	G66-57		24x24	7	14			1					
		M5-1L	21x15										
1-53		R2-1(35)											SIGN TO REMAIN
1-54		R2-1(35)	36x48	7		16		1					
1-55	R18B(Rt)		36x36	7		16		1					
1-56	G8-22		42x30							1			SEE NOTE 8
1-57		R3-5R	30x36	7		16		1					
1-58		R3-2	36x36										SEE NOTES 4, 5, AND 7
1-59		R5-1	36x36	7			18	1					
		R5-1a	36x24										
SHEET TOTAL								20	1	1	0	2	

Dist	COUNTY	ROUTE	POST MILES TOTAL PROJECT	SHEET No.	TOTAL SHEETS
03	But	32	10.1/10.5	74	126

11-6-15
REGISTERED CIVIL ENGINEER DATE

NOVEMBER 13, 2015
PLANS APPROVAL DATE

REGISTERED PROFESSIONAL ENGINEER
JAMES MARSHALL PANGBURN
No. 71445
Exp. 12/31/15
CIVIL
STATE OF CALIFORNIA

THE STATE OF CALIFORNIA OR ITS OFFICERS OR AGENTS SHALL NOT BE RESPONSIBLE FOR THE ACCURACY OR COMPLETENESS OF SCANNED COPIES OF THIS PLAN SHEET.

MARK THOMAS & CO., INC.
7300 FOLSOM BLVD STE 203
SACRAMENTO, CA 95826

CITY OF CHICO
CAPITAL PROJECT SERVICES
411 MAIN STREET
CHICO, CA 95927

SIGN QUANTITIES
SQ-2

REVISED BY: E. WEEKS
DATE REVISED:
CALCULATED-DESIGNED BY: J. PANGBURN
CHECKED BY:
CONSULTANT FUNCTIONAL SUPERVISOR: JAMES MARSHALL PANGBURN
STATE OF CALIFORNIA - DEPARTMENT OF TRANSPORTATION

LAST REVISION 00-00-00 DATE PLOTTED => $DATE TIME PLOTTED => $TIME

PATH: V:\Chico-55-0131-SR32 Widening\CADD\Phase 2 - SR 99 to East\ER\Mandatory\SQ-2.dgn
CAD USER: kfriedrich
PLOT DATE: Nov 18, 2015-09:12:36am

BORDER LAST REVISED 7/2/2010 | USERNAME => $USER | DGN FILE => $REQUEST | RELATIVE BORDER SCALE IS IN INCHES 0 1 2 3 | UNIT 0000 | PROJECT NUMBER & PHASE 0313000246

ROADSIDE SIGN QUANTITIES

SIGN NUMBER sht-No	CALIFORNIA CODE	MUTCD CODE	PANEL SIZE	"C" DIM IN FEET	POST SIZE AND LENGTH			ROADSIDE SIGN		INSTALL SIGN (SSBM)	REMOVE ROADSIDE SIGN	RELOCATE ROADSIDE SIGN	REMARKS
					4"x4"	4"x6"	6"x6"	ONE POST	TWO POST				
			(in)					EA	EA	EA	EA	EA	
1-60		R3-2	36x36										SEE NOTES 4, 5, AND 7
1-61		R1-1										1	
1-62		R3-2	36x36										SEE NOTES 4, 5, AND 7
1-63	G72												SIGN TO REMAIN
		R6-1R											
1-64	G7-1		36x36							1			SEE NOTE 8
1-65		W9-1R	48x48	5		16		1					
1-66	S32												SIGN TO REMAIN
	S32-1												
1-67		D4-2L										1	
1-68	SG 20											1	
1-69		R1-1										1	
1-70		R3-1										1	
1-71		R6-1R											SIGN TO REMAIN
1-72	G5												SIGN TO REMAIN
1-73	G28-2(32)		24x25	5	12			1					
		M3-2	24x12										
1-74		R3-1	24x24			15		1					
		R6-1L	54x18	1.5									FACES WEST
		R6-1R	54x18										FACES EAST
1-75		R3-2	24x24	5		15		1					
		R6-1R	54x18										FACES NORTH
		R6-1L	54x18	1.5									FACES SOUTH
1-76		R6-1L	54x18	1.5	8			1					FACES SOUTH
1-77	R61-34		48x30										SEE NOTES 4, 5, AND 7
1-78		R6-1L	54x18	1.5	7			1					
1-79													NOT USED
1-80	SPECIAL											1	PARK AND RIDE
1-81	G8-22		54x42	5		14		1					
1-82		W4-2R	48x48	5		17		1					
1-83	R81		24x18	7						1			SEE NOTE 6
1-84													NOT USED
1-85	R81		24x18	7	12			1					
1-86		R3-1	36x36	7						1			SEE NOTE 6
2-1	G28-2(99)										1		
		M2-1											
2-2		W3-3									1		
2-3		R2-1(35)											SIGN TO REMAIN
2-4		R2-1(35)											SIGN TO REMAIN
2-5													NOT USED
2-6		D4-2L									1		
2-7		R2-1(45)											SIGN TO REMAIN
	R48-1												
2-8													NOT USED
2-9		D4-2L	30x36	5	12				1				
FROM SHEET S-3											58		
SHEET TOTAL								9	1	3	61	6	
GRAND TOTAL								39	2	6	61	12	

Dist	COUNTY	ROUTE	POST MILES TOTAL PROJECT	SHEET No.	TOTAL SHEETS
03	But	32	10.1/10.5	75	126

11-6-15
REGISTERED CIVIL ENGINEER DATE

NOVEMBER 13, 2015
PLANS APPROVAL DATE

JAMES MARSHALL PANGBURN
No. 71445
Exp. 12/31/15
CIVIL
REGISTERED PROFESSIONAL ENGINEER
STATE OF CALIFORNIA

THE STATE OF CALIFORNIA OR ITS OFFICERS OR AGENTS SHALL NOT BE RESPONSIBLE FOR THE ACCURACY OR COMPLETENESS OF SCANNED COPIES OF THIS PLAN SHEET.

MARK THOMAS & CO., INC.
7300 FOLSOM BLVD STE 203
SACRAMENTO, CA 95826

CITY OF CHICO
CAPITAL PROJECT SERVICES
411 MAIN STREET
CHICO, CA 95927

REVISED BY | DATE REVISED
E. WEEKS | J. PANGBURN
CALCULATED-DESIGNED BY | CHECKED BY
CONSULTANT FUNCTIONAL SUPERVISOR
JAMES MARSHALL PANGBURN
STATE OF CALIFORNIA - DEPARTMENT OF TRANSPORTATION
Caltrans

SIGN QUANTITIES
SQ-3

LAST REVISION 00-00-00 | DATE PLOTTED => $DATE | TIME PLOTTED => $TIME

PATH: V:\Chico-55-0131-SR32 Widening\CADD\Phase 2 - SR 99 to East\Plans\Roadside\Drawings\
PLOT DATE: Nov 18, 2015-09:13:07am
CAD USER: kfriedrich

BORDER LAST REVISED 7/2/2010 | USERNAME => $USER | DGN FILE => $REQUEST | RELATIVE BORDER SCALE IS IN INCHES 0 1 2 3 | UNIT 0000 | PROJECT NUMBER & PHASE 0313000246

Dist	COUNTY	ROUTE	POST MILES TOTAL PROJECT	SHEET No.	TOTAL SHEETS
03	But	32	10.1/10.5	76	126

11-6-15
REGISTERED CIVIL ENGINEER DATE

NOVEMBER 13, 2015
PLANS APPROVAL DATE

JAMES MARSHALL PANGBURN No. 71445 Exp. 12/31/15 CIVIL — REGISTERED PROFESSIONAL ENGINEER — STATE OF CALIFORNIA

THE STATE OF CALIFORNIA OR ITS OFFICERS OR AGENTS SHALL NOT BE RESPONSIBLE FOR THE ACCURACY OR COMPLETENESS OF SCANNED COPIES OF THIS PLAN SHEET.

MARK THOMAS & CO., INC.
7300 FOLSOM BLVD STE 203
SACRAMENTO, CA 95826

CITY OF CHICO
CAPITAL PROJECT SERVICES
411 MAIN STREET
CHICO, CA 95927

NOTE:

1. CALIFORNIA SIGN CODES ARE DESIGNATED BY <CA> OTHERWISE FEDERAL SIGN CODES ARE SHOWN.

ABBREVIATIONS:

L LENGTH OF SIGN
D DEPTH OF SIGN

SIGN PANEL QUANTITIES

SIGN CODE	No. OF SIGNS	SIGN SIZE L X D	SIGN AREA	SINGLE FACED	BACKGROUND		LEGEND		PREMIUM	FURNISH SINGLE SHEET ALUMINUM SIGN		FURNISH SINGLE SHEET ALUMINUM SIGN	DESCRIPTION (REMARKS)
					SHEETING COLOR	RETROREFLECTIVE ASTM TYPE	SHEETING COLOR	RETROREFLECTIVE ASTM TYPE	PROTECTIVE FILM OVERLAY	UNFRAMED		FRAMED	
										0.063"	0.080"	0.080"	
		(in x in)	SF							SQFT	SQFT	SQFT	
D4-2L	2	30x36	7.50	X	GREEN	III	WHITE	III	X	15.00			PARK AND RIDE
G28-2(32) <CA>	1	24x25	4.17	X	GREEN	III	WHITE	III	X	4.17			STATE ROUTE MARKER
G33-1(Lt) <CA>	1	24x6	1.00	X	GREEN	III	WHITE	III	X	1.00			DIRECTIONAL ARROW AUXILIARY
G33-1(Lt) <CA>	1	24x6	1.00	x	BLUE	III	WHITE	III	X	1.00			DIRECTIONAL ARROW AUXILIARY
G66-57 <CA>	2	24x24	4.00	X	BLUE	III	WHITE	III	X	8.00			HIGHWAY PATROL
G97A <CA>	2	24x6	1.00	X	GREEN	III	WHITE	III	X	2.00			AMTRAK
I-7	2	24x24	4.00	X	GREEN	III	WHITE	III	X	8.00			TRAIN STATION
M3-2	1	24x12	2.00	X	GREEN	III	WHITE	III	X	2.00			EAST
M5-1L	1	21x15	2.19	X	BLUE	III	WHITE	III	X	2.19			ADVANCE TURN ARROW AUXILIARY
M6-3	1	21x15	2.19	X	GREEN	III	WHITE	III	X	2.19			DIRECTIONAL ARROW AUXILIARY
R2-1(35)	3	36x48	12.00	X	WHITE	III	BLACK	–	X		36.00		SPEED LIMIT (35)
R3-1	2	36x36	9.00	X	WHITE	IX	BLACK	–	X	18.00			NO RIGHT TURN
							RED	IX					
R3-2	5	36x36	9.00	X	WHITE	IX	BLACK	–	X	45.00			NO LEFT TURN
							RED	IX					
R3-1	4	24X24	4.00	X	WHITE	IX	BLACK	–	X	16.00			NO RIGHT TURN
							RED	IX					
R3-2	6	24X24	4.00	X	WHITE	IX	BLACK	–	X	24.00			NO LEFT TURN
							RED	IX					
R3-5R	1	30x36	7.50	X	WHITE	III	BLACK	–	X	7.50			MANDATORY MOVEMENT LANE CONTROL
R5-1	3	36x36	9.00	X	RED	IX	WHITE	IX	X	27.00			DO NOT ENTER
R5-1a	3	36x24	6.00	X	RED	IX	WHITE	IX	X	18.00			WRONG WAY
R5-10c	1	24x12	2.00	X	WHITE	IX	BLACK	–	X	2.00			NO PEDESTRIANS
R6-1L	8	54x18	6.75	X	WHITE	III	BLACK	–	X		54.00		ONE WAY (LEFT)
R6-1R	12	54x18	6.75	X	WHITE	III	BLACK	–	X		81.00		ONE WAY (RIGHT)
R9-3a	8	24x24	4.00	X	WHITE	III	BLACK	–	X	32.00			NO PEDESTRIAN CROSSING
							RED	III					
					SHEET TOTAL					235.05	171.00	0.00	

SIGN QUANTITIES
SQ-4

REVISED BY | DATE REVISED
CALCULATED-DESIGNED BY: E. WEEKS | CHECKED BY: J. PANGBURN
CONSULTANT FUNCTIONAL SUPERVISOR: JAMES MARSHALL PANGBURN
STATE OF CALIFORNIA – DEPARTMENT OF TRANSPORTATION

PATH: V:\Chico-55-0131-SR32 Widening\CADD\Phase 2 - SR 99 to East\FUEHRMANN\Standard Details\SD-Sign\
CAD USER: kfriedrich
PLOT DATE: Nov 18, 2015-09:13:48am

LAST REVISION 00-00-00 | DATE PLOTTED => $DATE | TIME PLOTTED => $TIME

BORDER LAST REVISED 7/2/2010 | USERNAME => $USER | DGN FILE => $REQUEST | RELATIVE BORDER SCALE IS IN INCHES 0 1 2 3 | UNIT 0000 | PROJECT NUMBER & PHASE 0313000246

Dist	COUNTY	ROUTE	POST MILES TOTAL PROJECT	SHEET No.	TOTAL SHEETS
03	But	32	10.1/10.5	77	126

11-6-15
REGISTERED CIVIL ENGINEER DATE

NOVEMBER 13, 2015
PLANS APPROVAL DATE

REGISTERED PROFESSIONAL ENGINEER
JAMES MARSHALL PANGBURN
No. 71445
Exp. 12/31/15
CIVIL
STATE OF CALIFORNIA

THE STATE OF CALIFORNIA OR ITS OFFICERS OR AGENTS SHALL NOT BE RESPONSIBLE FOR THE ACCURACY OR COMPLETENESS OF SCANNED COPIES OF THIS PLAN SHEET.

MARK THOMAS & CO., INC.
7300 FOLSOM BLVD STE 203
SACRAMENTO, CA 95826

CITY OF CHICO
CAPITAL PROJECT SERVICES
411 MAIN STREET
CHICO, CA 95927

NOTE:

1. CALIFORNIA SIGN CODES ARE DESIGNATED BY <CA>
   OTHERWISE FEDERAL SIGN CODES ARE SHOWN.

ABBREVIATIONS:

L LENGTH OF SIGN
D DEPTH OF SIGN

SIGN PANEL QUANTITIES

SIGN CODE	No. OF SIGNS	SIGN SIZE L X D (in x in)	SIGN AREA SF	SINGLE FACED	BACKGROUND SHEETING COLOR	BACKGROUND RETROREFLECTIVE ASTM TYPE	LEGEND SHEETING COLOR	LEGEND RETROREFLECTIVE ASTM TYPE	PREMIUM PROTECTIVE FILM OVERLAY	FURNISH SINGLE SHEET ALUMINUM SIGN UNFRAMED 0.063" SQFT	FURNISH SINGLE SHEET ALUMINUM SIGN UNFRAMED 0.080" SQFT	FURNISH SINGLE SHEET ALUMINUM SIGN FRAMED 0.080" SQFT	DESCRIPTION (REMARKS)
R18B(Rt) <CA>	1	36x36	9.00	X	WHITE	III	BLACK	–	X	9.00			RIGHT LANE MUST EXIT
R6-2R	2	24x30	5.00	X	WHITE	III	BLACK	–	X	10.00			ONE WAY (RIGHT)
R6-2L	1	24x30	5.00	X	WHITE	III	BLACK	–	X	5.00			ONE WAY (LEFT)
R61-34 <CA>	2	48x30	10.00	X	WHITE	III	BLACK	–	X		20.00		INTERSECTION LANE CONTROL
R81 <CA>	2	24x18	3.00	X	WHITE	III	BLACK	–	X	6.00			BIKE LANE
R96B(Lt) <CA>	4	24x16	2.67	X	WHITE	III	BLACK	–	X	10.68			USE CROSSWALK (LEFT)
R96B(Rt) <CA>	4	24x16	2.67	X	WHITE	III	BLACK	–	X	10.68			USE CROSSWALK (RIGHT)
W4-2R	1	48x48	16.00	X	YELLOW	IX	BLACK	–	X		16.00		LANE ENDS
W9-1R	1	48x48	16.00	X	YELLOW	III	BLACK	–	X		16.00		RIGHT LANE ENDS
G7-1<CA>	1	36x36	9.00	X	GREEN	XI	WHITE	XI	X	9.00			SIGN 1-64; SEE SHEET SD-9
G7-1<CA>	1	54x24	9.00	X	GREEN	XI	WHITE	XI	X		9.00		SIGN 1-43; SEE SHEET SD-9
G8-22 <CA>	1	42x30	8.75	X	GREEN	XI	WHITE	XI	X	8.75			SIGN 1-56; SEE SHEET SD-9
G8-22 <CA>	1	54x42	15.75	X	GREEN	XI	WHITE	XI	X		15.75		SIGN 1-81; SEE SHEET SD-9
G77-5.2 <CA>	1	84x72	42.00	X	GREEN	XI	WHITE	XI	X			42.00	SIGN 1-40; SEE SHEET SD-8
							SHEET TOTAL			69.11	76.75	42.00	
							BID TOTAL			304.16	247.75	42.00	

SIGN QUANTITIES
SQ-5

STATE OF CALIFORNIA – DEPARTMENT OF TRANSPORTATION
Caltrans

CONSULTANT FUNCTIONAL SUPERVISOR: JAMES MARSHALL PANGBURN
CALCULATED-DESIGNED BY: E. WEEKS
CHECKED BY: J. PANGBURN
REVISED BY
DATE REVISED

PATH: V:\Chico-55-0131-SR32 Widening\CADD\Phase 2 - SR 99 to East\FILENAME=sd_sq_sq_1.dgn PLOT DATE: Nov 18, 2015-09:14:13am CAD USER: kfriedrich

LAST REVISION 00-00-00 DATE PLOTTED => $DATE TIME PLOTTED => $TIME

Dist	COUNTY	ROUTE	POST MILES TOTAL PROJECT	SHEET No.	TOTAL SHEETS
03	But	32	10.1/10.5	78	126

11-6-15
REGISTERED CIVIL ENGINEER DATE

NOVEMBER 13, 2015
PLANS APPROVAL DATE

JAMES MARSHALL PANGBURN
No. 71445
Exp. 12/31/15
CIVIL
REGISTERED PROFESSIONAL ENGINEER
STATE OF CALIFORNIA

THE STATE OF CALIFORNIA OR ITS OFFICERS OR AGENTS SHALL NOT BE RESPONSIBLE FOR THE ACCURACY OR COMPLETENESS OF SCANNED COPIES OF THIS PLAN SHEET.

MARK THOMAS & CO., INC.
7300 FOLSOM BLVD STE 203
SACRAMENTO, CA 95826

CITY OF CHICO
CAPITAL PROJECT SERVICES
411 MAIN STREET
CHICO, CA 95927

NOTES:

1. FOR W61D<CA> AND W61F<CA> LANE DROP PANELS, USE RETROREFLECTIVE ASTM TYPE III YELLOW SHEETING FOR BACKGROUND.
2. FOR G28-1<CA> SHIELDS, USE RETROREFLECTIVE ASTM TYPE IV GREEN SHEETING FOR BACKGROUND AND RETROREFLECTIVE ASTM TYPE IX WHITE SHEETING FOR LEGEND.

OVERHEAD SIGN QUANTITIES

LOCATION	SIGN No.	SIGN CODE	SIGN SIZE L x D	SIGN AREA (N)	SINGLE FACED	SIGN PANEL MATERIAL					FURNISH LAMINATED PANEL SIGN (1"-TYPE A)	SIGN STRUCTURE (TRUSS)		SIGN STRUCTURE (BRIDGE MOUNTED WITH WALKWAY)		CIDH PILE FOUNDATION				REMARKS
						BACKGROUND		LEGEND		PROTECTIVE FILM OVERLAY						54"		60"		
												FURNISH	INSTALL	FURNISH	INSTALL	DEPTH				
			in x in	SQFT		SHEETING COLOR	RETROREFLECTIVE ASTM TYPE	SHEETING COLOR	RETROREFLECTIVE ASTM TYPE	PREMIUM (N)	SQFT	LBS	LBS	LBS	LBS	LEFT	RIGHT	LEFT	RIGHT	
"WB"94+60 5' Rt	HS-54	G78-6.1<CA>	132 x 70	64	X	GREEN	XI	WHITE	XI	X	64	–	–	1900	1900	–	–	–	–	SEE SD-2
"WB" 94+60 20' Lt	HS-53	G24-1<CA>	96 x 70	47	X	GREEN	XI	WHITE	XI	X	47	–	–	1350	1350	–	–	–	–	SEE SD-2
"EB" 95+35 6' Lt	HS-51	G78-6.1<CA>	132 x 70	64	X	GREEN	XI	WHITE	XI	X	64	–	–	1900	1900	–	–	–	–	SEE SD-2
"EB" 95+35 18' Rt	HS-52	G24-1<CA>	96 x 70	47	X	GREEN	XI	WHITE	XI	X	47	–	–	1350	1350	–	–	–	–	SEE SD-2
"WB" 98+75	HS-55	G20-6<CA> G24-5<CA>	120 x 90 144 x 90	75 90	X X	GREEN	XI	WHITE	XI	X	75 90	20560	20560	–	–	–	–	–	23	SEE SD -1
"C1" 555+65	HS-56	G24-6<CA> G24-5<CA>	204 x 90 144 x 90	127.5 90	X X	GREEN	XI	WHITE	XI	X	127.5 90	22300	22300	–	–	19.67	19.67	–	–	SEE SD -1
"C2" 555+80	HS-57	G24-6<CA> G24-5<CA>	204 x 90 144 x 90	127.5 90	X X	GREEN	XI	WHITE	XI	X	127.5 90	23000	23000	–	–	19.67	19.67	–	–	SEE SD -1
BID TOTAL											822	65,860	65,860	6,500	6,500	78.68		23		

SIGN QUANTITIES
SQ-6

REVISED BY | DATE REVISED
E. WEEKS | J. PANGBURN
CALCULATED-DESIGNED BY | CHECKED BY
CONSULTANT FUNCTIONAL SUPERVISOR | JAMES MARSHALL PANGBURN
STATE OF CALIFORNIA - DEPARTMENT OF TRANSPORTATION | Caltrans

LAST REVISION | DATE PLOTTED => $DATE | TIME PLOTTED => $TIME
00-00-00

PATH: V:\Chico-55-0131-SR32 Widening\CADD\Phase 2 - SR 99 to East\Final\Mandatory\SD\dgn\
PLOT DATE: Nov 18, 2015-09:14:38am CAD USER: kfriedrich

BORDER LAST REVISED 7/2/2010 | USERNAME => $USER | DGN FILE => $REQUEST | RELATIVE BORDER SCALE IS IN INCHES 0 1 2 3 | UNIT 0000 | PROJECT NUMBER & PHASE 0313000246

Dist	COUNTY	ROUTE	POST MILES TOTAL PROJECT	SHEET No.	TOTAL SHEETS
03	But	32	10.1/10.5	79	126

11-6-15
REGISTERED CIVIL ENGINEER DATE

NOVEMBER 13, 2015
PLANS APPROVAL DATE

REGISTERED PROFESSIONAL ENGINEER — JAMES MARSHALL PANGBURN — No. 71445 — Exp. 12/31/15 — CIVIL — STATE OF CALIFORNIA

THE STATE OF CALIFORNIA OR ITS OFFICERS OR AGENTS SHALL NOT BE RESPONSIBLE FOR THE ACCURACY OR COMPLETENESS OF SCANNED COPIES OF THIS PLAN SHEET.

MARK THOMAS & CO., INC.
7300 FOLSOM BLVD STE 203
SACRAMENTO, CA 95826

CITY OF CHICO
CAPITAL PROJECT SERVICES
411 MAIN STREET
CHICO, CA 95927

ROADWAY QUANTITIES

STATION LIMITS	HOT MIX ASPHALT (TYPE A)	CLASS 2 AGGREGATE BASE	HOT MIX ASPHALT (OPEN GRADED FRICTION COURSE)
	TON	CY	TON
"WB" 91+82.92 TO "WB" 100+67.26	393.56		
"WB" 91+82.92 TO "WB" 91+98.92	3.41		
"WB" 93+10.57 TO "WB" 93+49.07	10.68		
"WB" 94+64.11 TO "WB" 95+02.62	9.35		
"WB" 97+05.17 TO "FS" 102+89.72	147.42	204.94	
"WB" 100+67.26 TO "WB" 106+50.00	417.28	580.13	75.87
"WB" 100+67.26 TO "WB" 113+00.00			309.40
"EB" 94+10.23 TO "EB" 100+41.64	272.44		
"EB" 95+00.00 TO "EB" 95+35.71	8.31		
"EB" 96+57.45 TO "EB" 97+16.30	13.68		
"EB" 97+42.11 TO "C1" 553+58.77	13.40		
"EB" 97+82.30 TO "EB" 99+74.92	86.27	119.94	
"EB" 98+42.10 TO "FS" 97+68.11	25.38		
"EB" 100+41.64 TO "EB" 112+00.00	530.50	737.52	96.45
"EB" 100+41.64 TO "WB" 100+52.16	98.22		
"EB" 100+41.64 TO "WB" 100+52.16	100.62	139.88	
"EB" 101+50.00 TO "EB" 106+00.00	79.65	110.73	14.48
"C2" 554+18.00 TO "C2" 557+35.37	75.65		
"C2" 554+18.00 TO "C2" 557+43.14	435.39	624.21	
"C2" 557+75.11 TO "C2" 561+09.31	187.80	248.53	43.34
"C2" 557+75.11 TO "C2" 561+09.31			112.03
"C1" 550+41.39 TO "C1" 553+24.00	81.00		54.00
"C1" 550+41.39 TO "C1" 553+24.00	217.91	312.41	33.52
"C1" 553+24.00 TO "FS" 98+84.39	49.23	68.49	
"C1" 554+09.60 TO "C1" 557+25.89	272.66	390.91	
"C1" 554+12.80 TO "C1" 556+93.91	162.28		
"C1" 554+14.11 TO "C1" 557+25.89	85.82		
"C1" 556+93.64 TO "FS" 101+80.10	34.44	47.88	
"FS" 99+96.00 TO "FS" 101+80.10	35.38		
"FS" 97+68.11 TO "FS" 99+14.04	75.24		
"FS" 98+97.58 TO "EB" 100+41.64	13.51		
"FS" 99+97.47 TO "FS"100+80.10	67.80		
"FS" 102+72.18 TO "FS" 104+10.44	72.90		
"FS" 102+89.72 TO "FS" 104+10.44	26.27		
"FS" 103+54.08 TO "WB" 100+67.26	44.28	52.09	
"EB" 100+41.64 TO "EB" 116+72.00			384.99
"WB" 100+67.00 TO "WB" 106+50.00	18.64		
"EB" 100+44.03 TO "EB" 101+73.34	0.93		
"EB" 102+26.17 TO "EB" 103+21.74	3.13		
"EB" 101+50.00 TO "EB" 106+00.00	17.58		
"EB" 106+00.00 TO "EB" 112+00.00	19.18		
MINOR CONCRETE (MISC CONST)		548.35	
MISC AREA (DRIVEWAYS AND HMA OD)	54	3.95	
HMA DIKE	34		
BID TOTAL	4295.19	4189.96	1124.08

CLEARING AND GRUBBING

LOCATION	STATION LIMITS	SHEET	ACRES
A	"C2" 557+85.89 Rt TO "C2" 561+09.31 Rt	L-1	0.10
	"C2" 554+61.98 Rt TO "C2" 556+66.54 Rt	L-1	0.06
	"C1" 555+01.80 Lt TO "C1" 556+80.73 Lt	L-1	0.04
	"WB" 100+27.82 Lt to "WB" 105+50.00 Lt	L-1	0.36
	"WB" 105+50.00 Lt to "WB" 112+00.00 Lt	L-2	0.47
	"EB" 105+50.00 Lt to "EB" 112+00.00 Lt	L-2	0.61
	"EB" 105+50.00 Lt to "EB" 109+00.00 Lt	L-2	0.13
B	"C1" 250+41.40 Rt TO "C1" 253+58.77 Rt	L-1	0.42
	"C1" 554+21.36 Rt TO "WB" 96+27.44 Rt	L-1	0.05
	"C1" 554+21.36 Rt TO "EB" 99+78.60 Lt	L-1	0.10
	"EB" 99+78.60 Lt TO ""WB" 99+60.63 Rt	L-1	0.12
	"WB" 96+27.44 Rt TO "WB" 99+60.63 Rt	L-1	0.16
	"EB" 100+41.64 Rt to "EB" 105+50 Rt	L-1	0.35
	"EB" 100+29.91 Lt to "EB" 105+50 Lt	L-1	0.14
	"EB" 100+29.91 Lt to "FS" 102+06.48 Rt	L-1	0.03
		TOTAL	3.15

FENCE QUANTITIES

LOCATION / DESCRIPTION	REMOVE CHAIN LINK FENCE	CHAIN LINK FENCE (CL-6)
	LF	LF
"FS" 97+67.79 TO "FS" 98+74.52	112	
"FS" 97+67.79 TO "FS" 98+85.41		136
SUBTOTAL	112	136
BID TOTAL	112	136

EARTHWORK QUANTITIES

LOCATION / DESCRIPTION	ROADWAY EXCAVATION	EMBANKMENT [N]
	CY	CY
"WB" LINE	1310	60
"EB" LINE	2310	220
"FS" LINE	270	140
"C1" LINE	860	340
"C2" LINE	1070	40
LANDSCAPED AREAS	290	–
SUBTOTAL	6110	800
BID TOTAL	6110	–

LEGEND

[N] – NOT A SEPARATE PAY ITEM FOR INFORMATION ONLY

PLACE HOT MIX ASPHALT (MISCELLANEOUS AREA)

LOCATION	OVERSIDE DRAIN	DRIVEWAY	CLASS 2 AB
	SY	SY	CY
"C1" 555+91.51 Rt		16	
"FS" 101+25.54 Rt		7	
"FS" 101+35.91 Lt		34	
"EB" 101+99.74 Lt		75	
"EB" 103+51.06 Lt		49	
"WB" 104+00.00 Lt		34	3.95
(FROM DRAINAGE QUANTITIES)	5.81		
SUBTOTAL	5.81	215	3.95
BID TOTAL	220.81		*

*SEE ROADWAY QUANTITIES FOR TOTAL

PLACE HOT MIX ASPHALT DIKE

LOCATION	PLACE HOT MIX ASPHALT DIKE (TYPE E)
	LF
"C1" 550+41.39 TO "EB" 98+12.90	313.4
BID TOTAL	313.4

DECOMPOSED GRANITE

LOCATION	DECOMPOSED GRANITE
	CY
"WB" 98+50.85 TO "FS" 103+14.34	1822
BID TOTAL	1830

SUMMARY OF QUANTITIES

Q-1

STATE OF CALIFORNIA – DEPARTMENT OF TRANSPORTATION — Caltrans
CONSULTANT FUNCTIONAL SUPERVISOR: JAMES MARSHALL PANGBURN
CALCULATED–DESIGNED BY: E. WEEKS — CHECKED BY: J. PANGBURN
REVISED BY | DATE REVISED

LAST REVISION | DATE PLOTTED => $DATE | TIME PLOTTED => $TIME
00-00-00

PATH: V:\Chico-55-0131-SR32 Widening\CADD\Phase 2 - SR 99 to East\Plan\Mainline\Roadway\
CAD USER: kfriedrich
PLOT DATE: Nov 18, 2015-09:15:25am

BORDER LAST REVISED 7/2/2010 | USERNAME => $USER | DGN FILE => $REQUEST | RELATIVE BORDER SCALE IS IN INCHES 0 1 2 3 | UNIT 0000 | PROJECT NUMBER & PHASE 0313000246

Dist	COUNTY	ROUTE	POST MILES TOTAL PROJECT	SHEET No.	TOTAL SHEETS
03	But	32	10.1/10.5	80	126

11-6-15
REGISTERED CIVIL ENGINEER DATE

NOVEMBER 13, 2015
PLANS APPROVAL DATE

JAMES MARSHALL PANGBURN
No. 71445
Exp. 12/31/15
CIVIL
REGISTERED PROFESSIONAL ENGINEER
STATE OF CALIFORNIA

THE STATE OF CALIFORNIA OR ITS OFFICERS OR AGENTS SHALL NOT BE RESPONSIBLE FOR THE ACCURACY OR COMPLETENESS OF SCANNED COPIES OF THIS PLAN SHEET.

MARK THOMAS & CO., INC.
7300 FOLSOM BLVD STE 203
SACRAMENTO, CA 95826

CITY OF CHICO
CAPITAL PROJECT SERVICES
411 MAIN STREET
CHICO, CA 95927

REMOVE CONCRETE

STATION LIMITS	ISLAND (PORTIONS)	CURB & SIDEWALK	CURB & GUTTER
	SY	SY	LF
"C1" 557+00.00 TO 557+20.00	10		
"C2" 554+56.98 to "EB" 95+14.94			85
"C2" 556+72.02 TO "WB" 93+32.99			113
"WB" 94+71.30 TO "C1" 556+80.66			126
"EB" 96+86.10 TO "C1" 555+01.80			126
"WB" 97+73.39 TO "FS" 103+96.64		135	
BID TOTAL	10	135	450

TEMPORARY WATER POLLUTION CONTROL

STAGE No.	Temp DRAINAGE INLET PROTECTION	Temp CONCRETE WASHOUT	Temp HYDRAULIC MULCH (BONDED FIBER MATRIX)	Temp FIBER ROLL
	EA	LS	SY	LF
1	1	LS	4699	8458
2	1	LS	1566	2819
3	2			
BID TOTAL	4		6265	11,277

COLD PLANE AC PAVEMENT

STATION LIMITS	0.10' MAX	0.15' MAX	0.25' MAX
	SY	SY	SY
"WB" 91+82.92 TO "WB" 106+50.00			4095
"EB" 94+10.23 TO "EB" 110+25.00			3824
"C1" 554+10.30 TO "C1" 557+28.37			820
"C2" 554+21.82 TO "C2" 557+37.70			723
"FS" 97+68.11 TO "FS" 99+33.54			719
"FS" 99+86.68 TO "FS" 102+12.43			939
"FS" 102+39.44 TO "FS" 104+10.44			697
"EB" 112+00.00 TO "EB" 116+72.00		1574	
"EB" 112+00.00 TO "EB" 114+00.00	111		
SUBTOTAL	111	1574	11817
BID TOTAL	13502		

OBLITERATE SURFACING

STATION LIMITS	AREA
	SY
"FS" 102+75 (Lt)	39
"EB" 100+45 TO 101+50 (Rt)	46
BID TOTAL	85

SUMMARY OF QUANTITIES
Q-2

REVISED BY | DATE REVISED
E. WEEKS | J. PANGBURN
CALCULATED-DESIGNED BY | CHECKED BY
CONSULTANT FUNCTIONAL SUPERVISOR: JAMES MARSHALL PANGBURN
STATE OF CALIFORNIA - DEPARTMENT OF TRANSPORTATION

LAST REVISION 00-00-00
DATE PLOTTED => $DATE
TIME PLOTTED => $TIME

PATH: V:\Chico-55-0131-SR32 Widening\CADD\Phase 1 ERSA\95 Final\02 Park and Ride\Draw\02_ QUANTITY DATE: Nov 18, 2015-09:22:42am
CAD USER: kfriedrich

BORDER LAST REVISED 7/2/2010 | USERNAME => $USER | DGN FILE => $REQUEST | RELATIVE BORDER SCALE IS IN INCHES 0 1 2 3 | UNIT 0000 | PROJECT NUMBER & PHASE 0313000246

Dist	COUNTY	ROUTE	POST MILES TOTAL PROJECT	SHEET No.	TOTAL SHEETS
03	But	32	10.1/10.5	81	126

11-6-15
REGISTERED CIVIL ENGINEER DATE

REGISTERED PROFESSIONAL ENGINEER
JAMES MARSHALL PANGBURN
No. 71445
Exp. 12/31/15
CIVIL
STATE OF CALIFORNIA

NOVEMBER 13, 2015
PLANS APPROVAL DATE

THE STATE OF CALIFORNIA OR ITS OFFICERS OR AGENTS SHALL NOT BE RESPONSIBLE FOR THE ACCURACY OR COMPLETENESS OF SCANNED COPIES OF THIS PLAN SHEET.

MARK THOMAS & CO., INC.
7300 FOLSOM BLVD STE 203
SACRAMENTO, CA 95826

CITY OF CHICO
CAPITAL PROJECT SERVICES
411 MAIN STREET
CHICO, CA 95927

MINOR CONCRETE
(MISCELLANEOUS CONSTRUCTION)

LOCATION	STATION LIMITS	Rt/Lt	CURB & GUTTER A2-6	CURB	RETAINING CURB	ISLAND PAVING	STAMPED CONCRETE	AB CL2	SIDEWALK	DRIVEWAY	CURB RAMP	BUS TURNOUT	MINOR CONCRETE (GUTTER DEPRESSION)	DETECTABLE WARNING SURFACE
			CY	CY	CY	CY	SQFT	CY	CY	CY	CY	CY	CY	SQFT
A	"WB" 91+82.91 TO "WB" 98+98.91	Rt	0.94					3.10	0.99		0.67			12
	"C2" 557+85.89 TO "WB" 92+75.92	Lt	1.33					2.66			1.28			34
	"EB" 97+42.12 TO "C1" 553+58.77	Rt	1.75					4.43			1.52			16
	"EB" 98+12.90 TO "FS" 97+67.79	Rt	14.30				388	58.80	23.67		2.69			39
	"FS" 98+97.57 TO "EB" 100+32.43	Rt	4.12					14.44	5.73		2.20			24
	"FS" 98+89.24 TO "FS" 99+28.82	Lt		3.54		5.13	265	6.12						
	"EB" 99+40.71 TO "WB" 100+46.59	Rt	14.53					68.92	21.29	2.04	2.30	39.25		24
	"WB" 100+48.91 TO "FS" 103+54.08	Lt	5.74					21.57	7.70		1.10			12
	"WB" 97+05.17 TO "FS" 104+10.44	Lt	25.79				678	105.31	48.63		1.99			12
	"FS" 102+77.50 TO "FS" 103+00.31	Rt		1.43			85	0.78						
	"WB" 96+43.15 TO "EB" 99+62.06	Rt	33.23		18.72			116.39	57.65	8.30	1.45			24
	"WB" 96+43.15 TO "EB" 99+62.06	Rt	29.05					90.16	44.15	2.40	3.04			24
	"EB" 103+57.35 TO "EB" 106+00.00	Lt			11.89			4.00						
	"WB" 93+02.47 TO "WB" 93+18.47	Lt	0.94					2.53			1.25			12
	"EB" 95+05.14 TO "EB" 95+21.14	Lt	0.94					2.51			1.24			12
	"EB" 96+96.16 TO "EB" 97+12.16	Lt	0.94					2.57			1.28			12
	"WB" 94+92.03 TO "WB" 95+07.52	Lt	0.94					2.54			1.26			12
	"FS" 104+09.28 TO "FS" 104+20.34	Lt	1.18					2.47			1.08			12
	"FS" 100+81.69 TO "FS" 101+09.69	Rt							10.37					
B	"WB" 94+64.11 TO "EB" 96+57.45	Rt	27.73					21.75						
	"WB" 93+49.07 TO "EB" 95+35.71	Lt	24.63					17.30						
	(FROM DRAINAGE QUANTITIES)								7.16				4.80	
	SUBTOTAL		188.08	4.97	30.61	5.13	1416	548.35	227.10	12.74	24.35	39.25		
	BID TOTAL		**188.08**	**4.97**	**30.61**	**5.13**	**1416**	*	**227.10**	**12.74**	**24.35**	**39.25**	**4.80**	**281**

*SEE ROADWAY QUANTITIES SHEET Q-1 FOR TOTAL

SUMMARY OF QUANTITIES
Q-3

REVISED BY: E. WEEKS | DATE REVISED
CALCULATED-DESIGNED BY | CHECKED BY: J. PANGBURN
CONSULTANT FUNCTIONAL SUPERVISOR: JAMES MARSHALL PANGBURN
STATE OF CALIFORNIA - DEPARTMENT OF TRANSPORTATION

LAST REVISION 00-00-00 | DATE PLOTTED => $DATE | TIME PLOTTED => $TIME

PATH: V:\Chico-55-0131-SR32 Widening\CADD\Phase 2 - SR 99 to East Park\Final Design\QDrawing\
CAD USER: kfriedrich
PLOT DATE: Nov 18, 2015-09:15:50am

BORDER LAST REVISED 7/2/2010 | USERNAME => $USER | DGN FILE => $REQUEST | RELATIVE BORDER SCALE IS IN INCHES 0 1 2 3 | UNIT 0000 | PROJECT NUMBER & PHASE 0313000246

Dist	COUNTY	ROUTE	POST MILES TOTAL PROJECT	SHEET No.	TOTAL SHEETS
03	But	32	10.1/10.5	82	126

Kristin D. Calia 11/6/15
REGISTERED CIVIL ENGINEER DATE

November 13, 2015
PLANS APPROVAL DATE

REGISTERED PROFESSIONAL ENGINEER
K. CALIA
No. 62461
Exp. 9/30/17
CIVIL
STATE OF CALIFORNIA

THE STATE OF CALIFORNIA OR ITS OFFICERS OR AGENTS SHALL NOT BE RESPONSIBLE FOR THE ACCURACY OR COMPLETENESS OF SCANNED COPIES OF THIS PLAN SHEET.

FEHR AND PEERS
2990 LAVA RIDGE COURT
SUITE 200
ROSEVILLE, CA 95661

CITY OF CHICO
CAPITAL PROJECT SERVICES
411 MAIN STREET
CHICO, CA 95927

FOR ACCURATE RIGHT OF WAY AND ACCESS DATA, CONTACT RIGHT OF WAY ENGINEERING AT THE DISTRICT OFFICE.

TRAFFIC SIGNAL GENERAL NOTES:

1. ALL WORK SHALL CONFORM TO THE STATE OF CALIFORNIA DEPARTMENT OF TRANSPORTATION (CALTRANS) STANDARD PLANS 2010 AND STANDARD SPECIFICATIONS 2010, CALIFORNIA MUTCD 2014, SIGN SPECIFICATION SHEETS, AND THE SPECIAL PROVISIONS.
2. ALL PEDESTRIAN SIGNALS SHALL BE COUNTDOWN TYPE.
3. ALL PULL BOXES SHALL BE TRAFFIC RATED AND WITH WELDED LIDS OR THEFT–PROOF BOLTS. SEE SHEET E–18 FOR WELDED LID DETAIL.
4. ALL NEW PEDESTRIAN PUSH BUTTONS SHALL BE ACCESSIBLE PEDESTRIAN SIGNAL UNITS.
5. THE CONTRACTOR IS RESPONSIBLE FOR VERIFICATION OF ALL EXISTING UNDERGROUND UTILITIES, WHETHER OR NOT THEY ARE SHOWN ON THESE PLANS. THE CONTRACTOR SHALL CONTACT USA (800–642–2444) AT LEAST 48 HOURS BEFORE BEGINNING WORK. WHERE MARKINGS ARE NEAR PROPOSED FOUNDATIONS, THE CONTRACTOR SHALL LOCATE UNDERGROUND UTILITIES BY POT HOLING PRIOR TO EXCAVATING.
6. LOCATIONS AND DEPTHS OF EXISTING CITY OWNED FACILITIES SHOWN ON THESE PLANS ARE APPROXIMATE. THE CONTRACTOR SHALL VERIFY THE EXISTENCE, LOCATION AND DEPTH OF ALL CITY OWNED FACILITIES PRIOR TO CONSTRUCTION. THE CITY OF CHICO IS NOT A MEMBER OF UNDERGROUND SERVICE ALERT (USA). THE CONTRACTOR SHALL CALL THE CITY OF CHICO AT (530) 894–4200 AND REQUEST MARKING OF CITY OWNED FACILITIES AT LEAST 72 HOURS (3 WORKING DAYS) PRIOR TO CONSTRUCTION.
7. LOCATIONS OF UTILITY FACILITIES (NON–CITY) SHOWN ON THESE PLANS ARE APPROXIMATE AND SHALL BE VERIFIED BY THE CONTRACTOR BY CONTACTING THE REGIONAL NOTIFICATION CENTER (USA) AT LEAST 48 HOURS (2 WORKING DAYS) PRIOR TO CONSTRUCTION.

INDEX OF ELECTRICAL PLANS

E–1 – GENERAL NOTES, LEGEND, ABBREVIATIONS, AND INDEX
E–2 THRU E–4 – MODIFY SIGNAL AND LIGHTING (LOCATION 1)
E–5 THRU E–7 – MODIFY SIGNAL AND LIGHTING (LOCATION 2)
E–8 AND E–9 – SIGNAL AND LIGHTING (LOCATION 3)
E–10 THRU E–13 – SIGNAL AND LIGHTING (LOCATION 4)
E–14 – MODIFY LIGHTING AND SIGN ILLUMINATION
E–15 – SERVICE WIRING DIAGRAMS
E–16 – LIGHTING CIRCUIT DIAGRAM
E–17 THRU E–18 – ELECTRICAL DETAILS
E–19 THRU E–26 – TEMPORARY SIGNAL SYSTEM
E–27 THRU E–32 – ELECTRICAL DETAILS (TEMPORARY WOOD POLES)
E–33 THRU E–34 – ELECTRICAL QUANTITIES
E–35 – LIGHTING (CITY STREET)

ABBREVIATIONS

(SEE ALSO RSP ES–1A, RSP ES–1B, AND RSP ES–1C)

CTID	– CALTRANS IDENTIFICATION
GA	– GREEN ARROW
PG&E	– PACIFIC GAS & ELECTRIC
TC	– TELEPHONE CABLE

LEGEND

D1287–15' – ELECTROLIER NUMBERING SYSTEM
- 15' – LUMINAIRE ARM LENGTH IN FEET
- D1287 – ELECTROLIER NUMBER

APPROVED FOR ELECTRICAL WORK ONLY

GENERAL NOTES, LEGEND, ABBREVIATIONS, AND INDEX

NO SCALE

E-1

REVISED BY | DATE REVISED
M. JOHNSTONE | K. CALIA
CALCULATED–DESIGNED BY | CHECKED BY
CONSULTANT FUNCTIONAL SUPERVISOR
KRISTIN D. CALIA
STATE OF CALIFORNIA – DEPARTMENT OF TRANSPORTATION
Caltrans

LAST REVISION 00–00–00 | DATE PLOTTED => $DATE | TIME PLOTTED => $TIME

BORDER LAST REVISED 7/2/2010 | USERNAME => $USER | DGN FILE => $REQUEST | RELATIVE BORDER SCALE IS IN INCHES 0 1 2 3 | UNIT 0000 | PROJECT NUMBER & PHASE 0313000246

FOR ACCURATE RIGHT OF WAY AND ACCESS DATA, CONTACT RIGHT OF WAY ENGINEERING AT THE DISTRICT OFFICE.

PROJECT NOTES:

1. INSTALL DEPARTMENT-FURNISHED MODEL 332L CABINET WITH MODEL 2070 CONTROLLER, DRAWER SHELF ASSEMBLY AND 2070 6-A MODEM. INSTALL DEPARTMENT-FURNISHED BATTERY BACK UP SYSTEM CABINET AND BATTERY BACK UP COMPONENTS. FURNISH AND INSTALL BATTERIES, EVP PHASE SELECTOR, AND MAKE FINAL CONNECTIONS.
17. Exist 2"C, 3#1 (120/240 V SERVICE).
18. 2"C, 1 SIC.
22. Exist 2"C, 2#8 (240 V intersection ltg).
26. Exist 3"C, 2#8 (240 V intersection ltg), 2#4 (120 V controller), 2#8 (120 V fb). REMOVE 2#8 (120 V fb).
28. 2"C, 2 DLC.
29. INSTALL 6'x12' DETECTOR LOOP.
30. 2"C, 8 DLC.
33. Exist 2"C, 1 sic. RC 1 sic. ADD 1 SIC.
35. Exist TYPE III-AF SERVICE EQUIPMENT ENCLOSURE TO REMAIN. SEE MODIFIED SERVICE WIRING DIAGRAM 'C' ON SHEET E-15.
48. 2"C, 6 DLC.
51. INSTALL Exist ROADWAY 1 LED LUMINAIRE FROM REMOVED STANDARD (SEE SHEET E-4).
60. RC Exist PULL BOX. INSTALL TRAFFIC WELDED PULL BOX IN PLACE.
75. INSTALL LEFT TURN SIGNAL WITH RED BALL PER DETAIL ON SHEET E-18.
83. INSTALL PCC CONTROLLER PAD AND CONTROLLER/BBS FOUNDATION. SEE SHEET E-17 FOR PAD AND FOUNDATION DETAILS.
119. INSTALL LOOP DETECTORS PER LOOP DETECTOR LAYOUT DETAIL ON SHEET E-18.

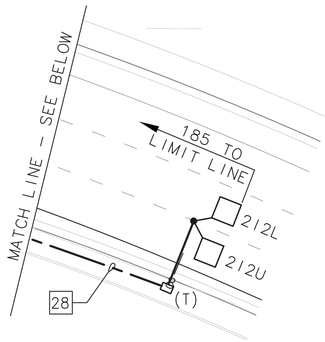

Dist	COUNTY	ROUTE	POST MILES TOTAL PROJECT	SHEET No.	TOTAL SHEETS
03	But	32	10.1/10.5	83	126

Kristin D. Calia 11/6/15
REGISTERED CIVIL ENGINEER DATE

November 13, 2015
PLANS APPROVAL DATE

REGISTERED PROFESSIONAL ENGINEER — K. CALIA No. 62461 Exp. 9/30/17 CIVIL — STATE OF CALIFORNIA

THE STATE OF CALIFORNIA OR ITS OFFICERS OR AGENTS SHALL NOT BE RESPONSIBLE FOR THE ACCURACY OR COMPLETENESS OF SCANNED COPIES OF THIS PLAN SHEET.

FEHR AND PEERS
2990 LAVA RIDGE COURT
SUITE 200
ROSEVILLE, CA 95661

CITY OF CHICO
CAPITAL PROJECT SERVICES
411 MAIN STREET
CHICO, CA 95927

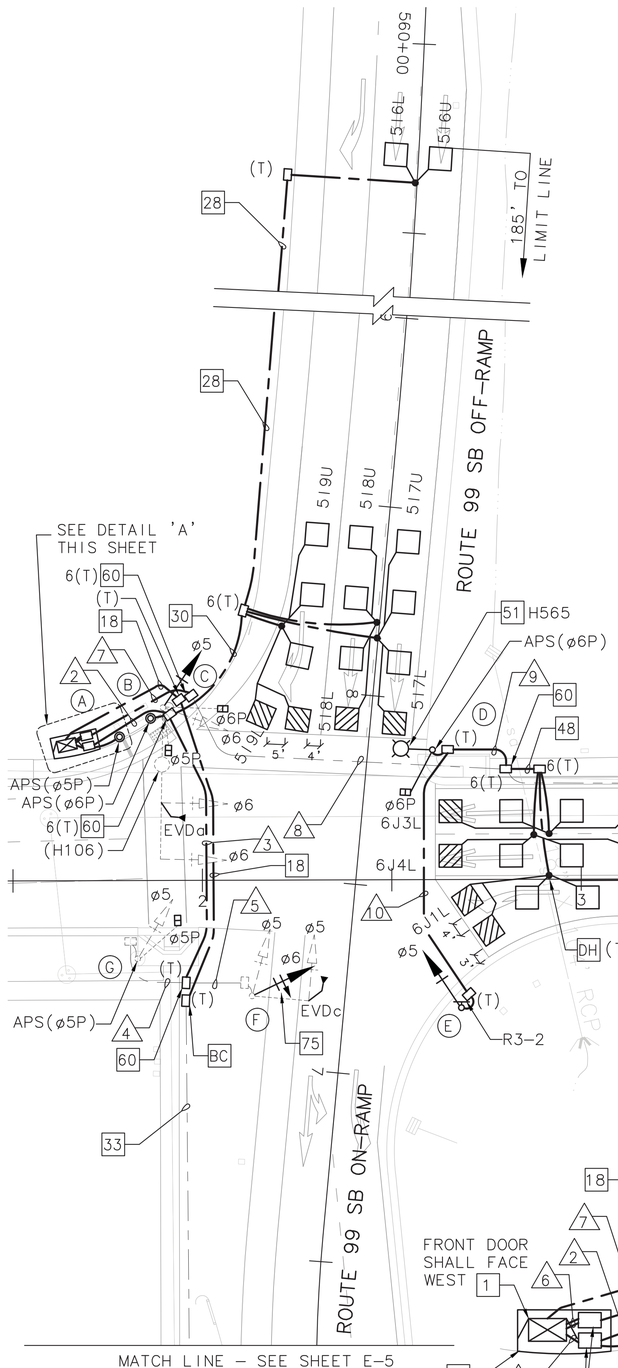

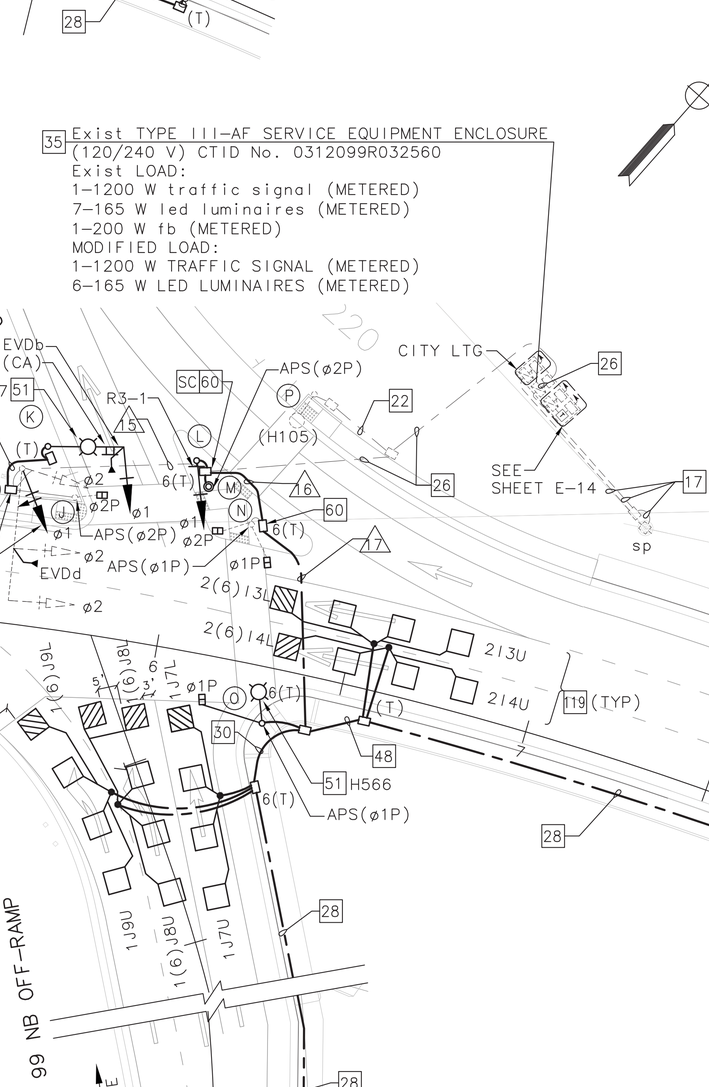

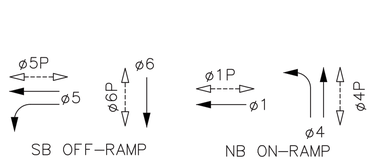

Exist PHASE DIAGRAM

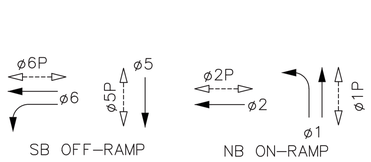

PROPOSED PHASE DIAGRAM

EMERGENCY VEHICLE PREEMPTION
EVDa = ø6
EVDb = ø1
EVDc = ø5
EVDd = ø2 + ø6

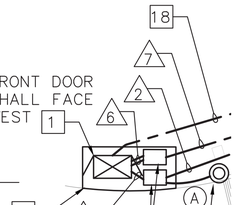

DETAIL 'A'
NO SCALE

MODIFY SIGNAL AND LIGHTING (LOCATION 1)

SCALE: 1"=20'

E-2

APPROVED FOR ELECTRICAL WORK ONLY

STATE OF CALIFORNIA - DEPARTMENT OF TRANSPORTATION — Caltrans

CALCULATED-DESIGNED BY: M. JOHNSTONE
CHECKED BY: K. CALIA
CONSULTANT FUNCTIONAL SUPERVISOR: KRISTIN D. CALIA
REVISED BY | DATE REVISED

LAST REVISION: DATE PLOTTED => $DATE 00-00-00; TIME PLOTTED => $TIME

BORDER LAST REVISED 7/2/2010 | USERNAME => $USER | DGN FILE => $REQUEST | RELATIVE BORDER SCALE IS IN INCHES 0 1 2 3 | UNIT 0000 | PROJECT NUMBER & PHASE 0313000246

FOR ACCURATE RIGHT OF WAY AND ACCESS DATA, CONTACT
RIGHT OF WAY ENGINEERING AT THE DISTRICT OFFICE.

Dist	COUNTY	ROUTE	POST MILES TOTAL PROJECT	SHEET No.	TOTAL SHEETS
03	But	32	10.1/10.5	84	126

Kristin D. Calia 11/6/15
REGISTERED CIVIL ENGINEER DATE

November 13, 2015
PLANS APPROVAL DATE

REGISTERED PROFESSIONAL ENGINEER
K. CALIA
No. 62461
Exp. 9/30/17
CIVIL
STATE OF CALIFORNIA

THE STATE OF CALIFORNIA OR ITS OFFICERS OR AGENTS SHALL NOT BE RESPONSIBLE FOR THE ACCURACY OR COMPLETENESS OF SCANNED COPIES OF THIS PLAN SHEET.

FEHR AND PEERS
2990 LAVA RIDGE COURT
SUITE 200
ROSEVILLE, CA 95661

CITY OF CHICO
CAPITAL PROJECT SERVICES
411 MAIN STREET
CHICO, CA 95927

CONDUCTOR SCHEDULE

CONDUCTOR DESIGNATION			NUMBER OF CONDUCTORS																
CABLE TYPE	STD	PHASE	RUN NUMBER																
			1	2	3	4	5	6	7	8	9	10	11	12	13	14	15	16	17
12CSC VEH-PED	Ⓒ	5,6,5P,6P	1	1															
9CSC VEH-PED APS	Ⓕ	5,6	1	1	1		1												
	Ⓖ	5,5P	1	1	1	1													
	Ⓘ	1,2						1	1	1			1	1	1				
	Ⓝ	1P,2P						1	1	1			1	1	1		1	1	
	APS/PED-HEAD CABLE			1														1	
	TOTAL 9CSC		2	3	2	1	1	2	2	2	–	–	2	2	2	–	1	2	–
5CSC VEH-PED	Ⓓ	6P						1	1	1	1								
	Ⓔ	5						1	1	1	1	1							
	Ⓗ	1						1	1	1			1	1					
	Ⓙ	2P						1	1	1			1	1	1				
	Ⓚ	1						1	1	1			1	1	1	1			
	Ⓛ	1						1	1	1			1	1	1		1		
	Ⓞ	1P						1	1	1			1	1	1		1	1	1
	TOTAL 5CSC		–	–	–	–	–	7	7	7	2	1	5	5	4	1	2	1	1
3CSC PPB	Ⓐ	5P	1																
	Ⓑ	6P	1	1															
	Ⓓ	6P						1	1	1	1								
	Ⓖ	5P	1	1	1	1													
	Ⓙ	2P						1	1	1			1	1	1				
	Ⓜ	2P						1	1	1			1	1	1		1		
	Ⓝ	1P						1	1	1			1	1	1		1	1	
	Ⓞ	1P						1	1	1			1	1	1		1	1	1
	TOTAL 3CSC		3	2	1	1	–	5	5	5	1	–	4	4	4	–	3	2	1
#8	LIGHTING		2	2				2	2	2	2		2	2	2	2	2	2	2
#4	CONTROLLER POWER							2	2	2			2	2	2		2		
TYPE B DLC	ø1							8	8	8			8	8	8		8	8	8
	ø2							6	6	6			6	6	6		6	6	6
	ø5		8	8															
	ø6							9	9	9			3						
	TOTAL DLCs PER RUN		8	8	–	–	–	23	23	23	–	–	17	14	14	–	14	14	14
EVP CABLE			2	2	1		1	2	2	2			2	2	2	1			
CONDUIT SIZE			4"	2-3"	3"	1½"	2"	2-4"	3-3"	2-4"	2"	3"	4"	4"	4"	3"	3"	2-3"	3"
NEW/EXISTING			N	N	N	E	E	N	N	E	N	N	E	E	E	N	E	N	N
PERCENT FILL			18	17	12	22	12	19	22	19	9	3	30	29	27	5	33	15	20

ALL CONDUCTORS ARE NEW

POLE AND EQUIPMENT SCHEDULE

	STANDARD			VEH SIG MTG				PED SIGNAL MOUNTING		APS		LED LUM	SPECIAL REQUIREMENTS
No.	TYPE	SMA	LMA	ø	MAST ARM	ø	POLE	ø	MOUNTING	ø	ARROW		
Ⓐ	PPB POST	–	–	–	–	–	–	–	–	5	←	–	SEE PPB POST DETAIL ON SHEET E-18.
Ⓑ	PPB POST	–	–	–	–	–	–	–	–	6	→	–	SEE PPB POST DETAIL ON SHEET E-18.
Ⓒ	(26A-3-70)	(40')	(15')	6 6	(MAS) (MAS)	6 5	~~(SV-1-T)~~ SV-2-TB	6 5	(SP-1-CS) (SP-1-CS)	– –	– –	(ROADWAY 1)	EXISTING POLE TO REMAIN. CONVERT Exist (SV-1-T) TO SV-2-TB. INSTALL COUNTDOWN PED SIGNALS.
Ⓓ	15TS	–	12'	–	–	–	–	6	SP-1-T	6	←	ROADWAY 1	INSTALL Exist LED LUMINAIRE REMOVED PER SHEET E-4. INSTALL COUNTDOWN PEDESTRIAN SIGNAL.
Ⓔ	1-B	–	–	–	–	5	TV-1-T	–	–	–	–	–	INSTALL R3-2 ON SIGNAL POLE.
Ⓕ	(16-1-70)	(15')	–	5	(MAS)	5 6	~~(SV-1-T)~~ SV-2-TB	–	–	–	–	–	EXISTING POLE TO REMAIN. CONVERT Exist (SV-1-T) TO SV-2-TB. SALVAGE Exist VDC.
Ⓖ	(1-B)	–	–	–	–	5	(TV-1-T)	5	(SP-1-CS)	5	→	–	EXISTING POLE TO REMAIN. INSTALL COUNTDOWN PEDESTRIAN SIGNAL.
Ⓗ	(15TS)	–	(12')	–	–	1	(SV-1-T)	–	–	–	–	(ROADWAY 1)	EXISTING POLE TO REMAIN.
Ⓘ	(23-3-70)	(35')	–	2 2	(MAS) (MAS)	2 1	~~(SV-1-T)~~ SV-2-TB	–	–	–	–	–	EXISTING POLE TO REMAIN. CONVERT Exist (SV-1-T) TO SV-2-TB.
Ⓙ	(1-B)	–	–	–	–	–	–	2	(TP-1-T)	2	→	–	EXISTING POLE TO REMAIN. INSTALL COUNTDOWN PEDESTRIAN SIGNAL.
Ⓚ	17-3-100	20'	12'	1	MAT	–	–	–	–	–	–	ROADWAY 1	INSTALL Exist LED LUMINAIRE REMOVED PER SHEET E-4. INSTALL R61-34(CA) ON SIGNAL MAST ARM.
Ⓛ	1-B	–	–	–	–	1	TV-1-T	–	–	–	–	–	INSTALL R3-1 ON SIGNAL POLE.
Ⓜ	PPB POST	–	–	–	–	–	–	–	–	2	←	–	SEE PPB POST DETAIL ON SHEET E-18.
Ⓝ	(1-B)	–	–	–	–	–	–	2 1	(TP-2-T)	1	→	–	EXISTING POLE TO REMAIN. INSTALL COUNTDOWN PEDESTRIAN SIGNALS.
Ⓞ	15TS	–	12'	–	–	–	–	1	SP-1-T	1	→	ROADWAY 1	INSTALL Exist LED LUMINAIRE REMOVED PER SHEET E-4. INSTALL COUNTDOWN PEDESTRIAN SIGNAL.
Ⓟ	(15)	–	(12')	–	–	–	–	–	–	–	–	(ROADWAY 1)	

( ) = DENOTES EXISTING

MODIFY SIGNAL AND LIGHTING (LOCATION 1)

NO SCALE

E-3

APPROVED FOR ELECTRICAL WORK ONLY

REVISED BY | DATE REVISED
M. JOHNSTONE | K. CALIA
CALCULATED-DESIGNED BY | CHECKED BY
CONSULTANT FUNCTIONAL SUPERVISOR: KRISTIN D. CALIA
STATE OF CALIFORNIA - DEPARTMENT OF TRANSPORTATION
Caltrans

LAST REVISION 00-00-00 | DATE PLOTTED => $DATE | TIME PLOTTED => $TIME

BORDER LAST REVISED 7/2/2010 | USERNAME => $USER | DGN FILE => $REQUEST | RELATIVE BORDER SCALE IS IN INCHES 0 1 2 3 | UNIT 0000 | PROJECT NUMBER & PHASE 0313000246

FOR ACCURATE RIGHT OF WAY AND ACCESS DATA, CONTACT RIGHT OF WAY ENGINEERING AT THE DISTRICT OFFICE.

PROJECT NOTES:

8 REMOVE AND SALVAGE Exist VIDEO DETECTION CAMERA

14 RC Exist PPB.

25 RETAIN Exist LED LUMINAIRE FOR INSTALLATION ON NEW POLE PER SHEET E-2.

35 Exist TYPE III-AF SERVICE EQUIPMENT ENCLOSURE TO REMAIN. SEE MODIFIED SERVICE WIRING DIAGRAM 'C' ON SHEET E-15.

36 Exist CONDUCTORS AND CABLES TO REMAIN.

37 Exist SIGNAL EQUIPMENT TO REMAIN.

38 ABANDON ALL LOOPS WITHIN LANES.

39 Exist CONDUIT TO REMAIN. SEE SHEET E-2 AND E-3 FOR CONDUCTORS.

41 Exist LIGHTING STANDARD TO REMAIN.

84 RETAIN Exist LED LUMINAIRE FOR INSTALLATION ON NEW POLE PER SHEET E-5.

117 RS Exist MODEL 170 CONTROLLER AND MODEL 332 CABINET. INSTALL NEW CONTROLLER ASSEMBLY PER SHEET E-2.

Dist	COUNTY	ROUTE	POST MILES TOTAL PROJECT	SHEET No.	TOTAL SHEETS
03	But	32	10.1/10.5	85	126

Kristin D. Calia 11/6/15
REGISTERED CIVIL ENGINEER DATE

November 13, 2015
PLANS APPROVAL DATE

REGISTERED PROFESSIONAL ENGINEER — K. CALIA No. 62461 Exp. 9/30/17 CIVIL — STATE OF CALIFORNIA

THE STATE OF CALIFORNIA OR ITS OFFICERS OR AGENTS SHALL NOT BE RESPONSIBLE FOR THE ACCURACY OR COMPLETENESS OF SCANNED COPIES OF THIS PLAN SHEET.

FEHR AND PEERS
2990 LAVA RIDGE COURT
SUITE 200
ROSEVILLE, CA 95661

CITY OF CHICO
CAPITAL PROJECT SERVICES
411 MAIN STREET
CHICO, CA 95927

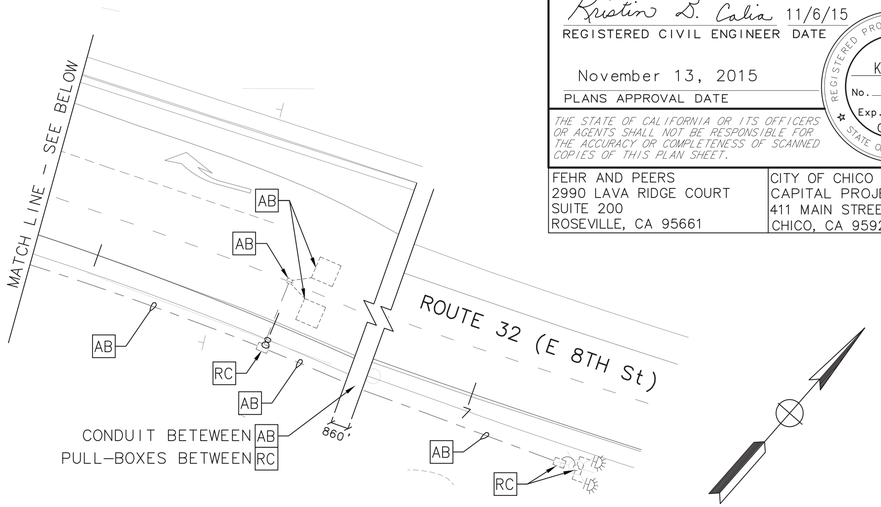

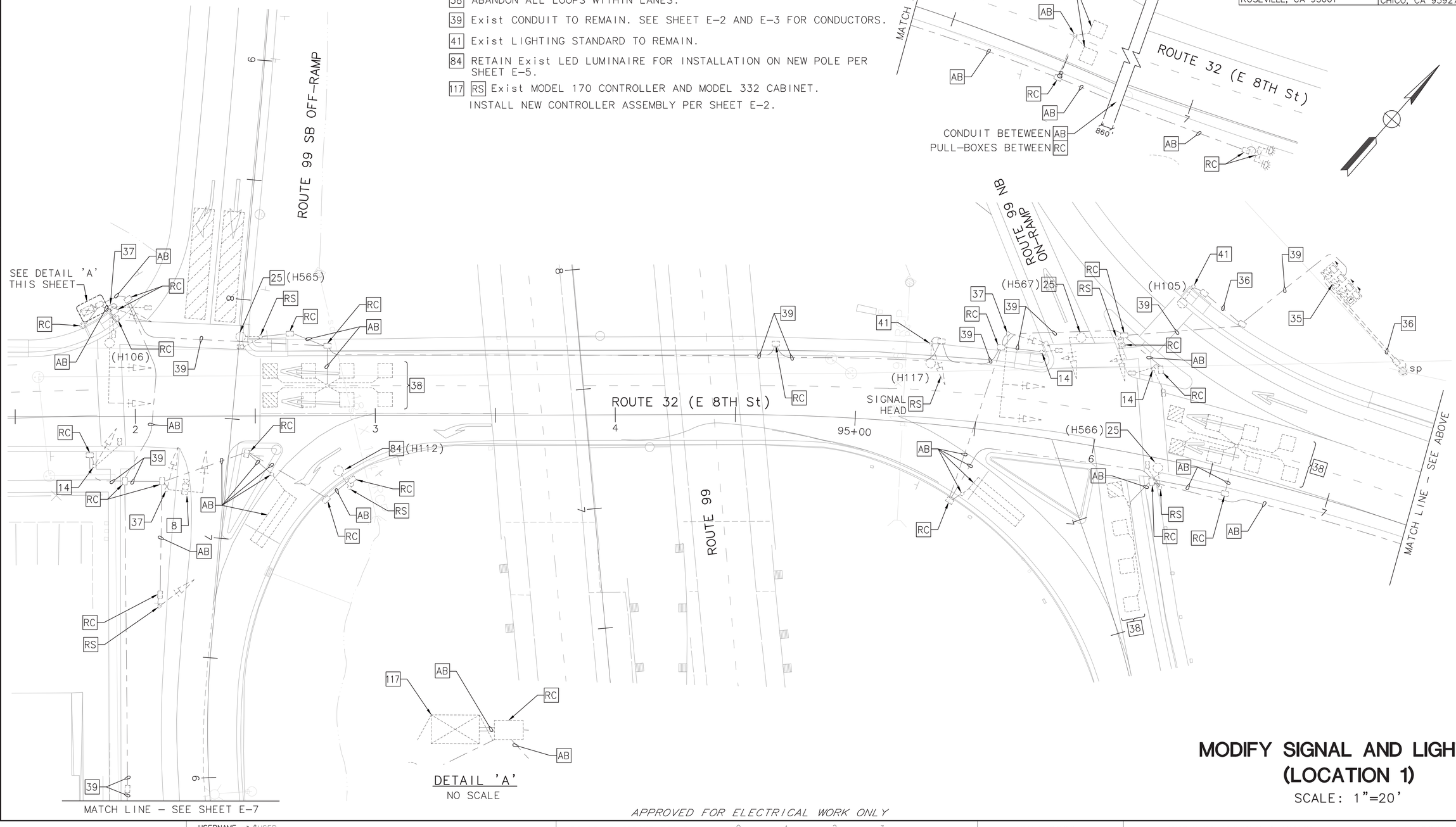

DETAIL 'A'
NO SCALE

MODIFY SIGNAL AND LIGHTING (LOCATION 1)

SCALE: 1"=20'

E-4

APPROVED FOR ELECTRICAL WORK ONLY

STATE OF CALIFORNIA – DEPARTMENT OF TRANSPORTATION
Caltrans
CONSULTANT FUNCTIONAL SUPERVISOR: KRISTIN D. CALIA
CALCULATED-DESIGNED BY: M. JOHNSTONE
CHECKED BY: K. CALIA
REVISED BY | DATE REVISED

LAST REVISION 00-00-00 DATE PLOTTED => $DATE TIME PLOTTED => $TIME

BORDER LAST REVISED 7/2/2010 | USERNAME => $USER DGN FILE => $REQUEST | RELATIVE BORDER SCALE IS IN INCHES 0 1 2 3 | UNIT 0000 | PROJECT NUMBER & PHASE 0313000246

FOR ACCURATE RIGHT OF WAY AND ACCESS DATA, CONTACT RIGHT OF WAY ENGINEERING AT THE DISTRICT OFFICE.

PROJECT NOTES:

1 INSTALL DEPARTMENT–FURNISHED MODEL 332L CABINET WITH MODEL 2070 CONTROLLER, DRAWER SHELF ASSEMBLY AND 2070 6–A MODEM. INSTALL DEPARTMENT–FURNISHED BATTERY BACK UP SYSTEM CABINET AND BATTERY BACK UP COMPONENTS. FURNISH AND INSTALL BATTERIES, EVP PHASE SELECTOR, AND MAKE FINAL CONNECTIONS.

18 2"C, 1 SIC.

27 Exist 2"C, 3#2 (service).

28 2"C, 2 DLC.

30 2"C, 8 DLC.

33 Exist 2"C, 1 sic. RC 1 sic. ADD 1 SIC.

44 2"C, 3 DLC.

45 2"C, 2 SIC.

47 2"C, 6 DLC.

51 INSTALL Exist ROADWAY 1 LED LUMINAIRE FROM REMOVED SIGNAL POLE (SEE SHEET E–4).

58 2"C, 9 DLC.

60 RC Exist PULL BOX. INSTALL TRAFFIC WELDED PULL BOX IN PLACE.

61 2"C, 2#8 (120 V TDC).

62 2"C, 1 TC.

70 Exist 2"C, 2#4 (120 V controller), 2#10 (240 V intersection ltg). RC 2#10 (240 V intersection ltg), 2#4 (120 V controller). ADD 2#8 (240 V INTERSECTION LTG), 2#6 (120 V CONTROLLER), 2#8 (120 V TDC).

71 2"C, 2#6 (120 V CONTROLLER), 2#8 (240 V INTERSECTION LTG).

73 Exist TYPE III–AF SERVICE EQUIPMENT ENCLOSURE TO REMAIN. SEE SERVICE WIRING DIAGRAM 'D' ON SHEET E–15.

75 INSTALL LEFT TURN SIGNAL WITH RED BALL PER DETAIL ON SHEET E–18.

83 INSTALL PCC CONTROLLER PAD AND CONTROLLER/BBS FOUNDATION. SEE SHEET E–17 FOR PAD AND FOUNDATION DETAILS.

85 INSTALL TYPE B TELEPHONE DEMARCATION CABINET.

119 INSTALL LOOP DETECTORS PER LOOP DETECTOR LAYOUT DETAIL ON SHEET E–18.

Dist	COUNTY	ROUTE	POST MILES TOTAL PROJECT	SHEET No.	TOTAL SHEETS
03	But	32	10.1/10.5	86	126

Kristin D. Calia 11/6/15
REGISTERED CIVIL ENGINEER DATE

November 13, 2015
PLANS APPROVAL DATE

REGISTERED PROFESSIONAL ENGINEER — K. CALIA No. 62461 Exp. 9/30/17 CIVIL — STATE OF CALIFORNIA

THE STATE OF CALIFORNIA OR ITS OFFICERS OR AGENTS SHALL NOT BE RESPONSIBLE FOR THE ACCURACY OR COMPLETENESS OF SCANNED COPIES OF THIS PLAN SHEET.

FEHR AND PEERS
2990 LAVA RIDGE COURT
SUITE 200
ROSEVILLE, CA 95661

CITY OF CHICO
CAPITAL PROJECT SERVICES
411 MAIN STREET
CHICO, CA 95927

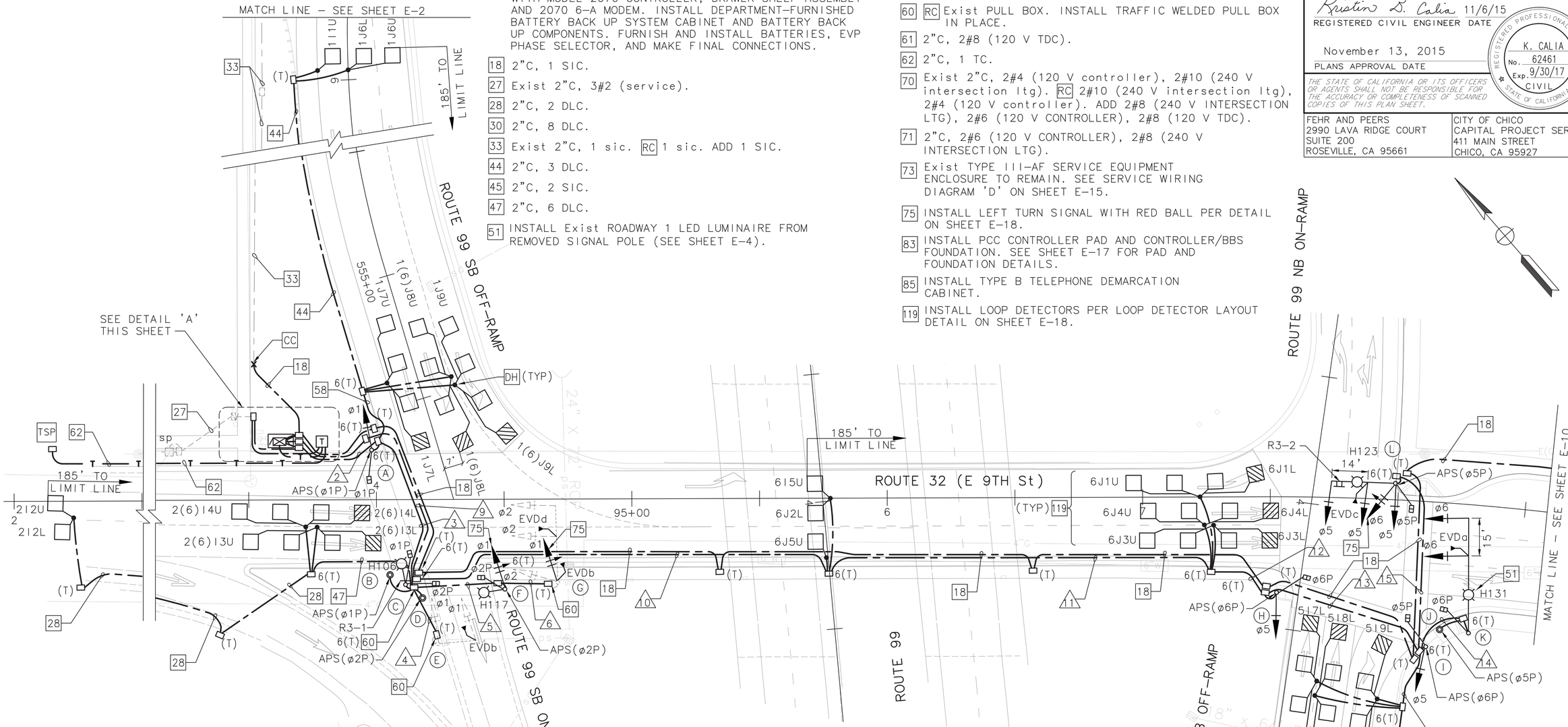

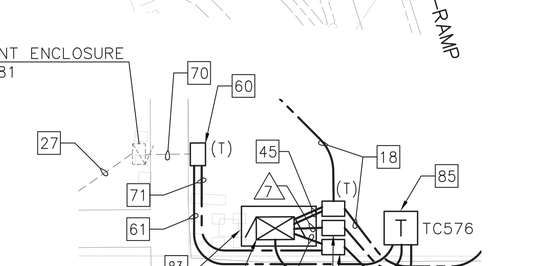

DETAIL 'A'
NO SCALE

Exist PHASE DIAGRAM

PROPOSED PHASE DIAGRAM

EMERGENCY VEHICLE PREEMPTION
EVDa = ø6
EVDb = ø1
EVDc = ø5
EVDd = ø2

MODIFY SIGNAL AND LIGHTING (LOCATION 2)

SCALE: 1"=20'

E-5

APPROVED FOR ELECTRICAL WORK ONLY

STATE OF CALIFORNIA – DEPARTMENT OF TRANSPORTATION
CONSULTANT FUNCTIONAL SUPERVISOR: KRISTIN D. CALIA
CALCULATED-DESIGNED BY: M. JOHNSTONE
CHECKED BY: K. CALIA
REVISED BY
DATE REVISED
LAST REVISION DATE PLOTTED => $DATE
TIME PLOTTED => $TIME
00-00-00

BORDER LAST REVISED 7/2/2010
USERNAME => $USER
DGN FILE => $REQUEST
RELATIVE BORDER SCALE IS IN INCHES 0 1 2 3
UNIT 0000
PROJECT NUMBER & PHASE 0313000246

FOR ACCURATE RIGHT OF WAY AND ACCESS DATA, CONTACT
RIGHT OF WAY ENGINEERING AT THE DISTRICT OFFICE.

Dist	COUNTY	ROUTE	POST MILES TOTAL PROJECT	SHEET No.	TOTAL SHEETS
03	But	32	10.1/10.5	87	126

Kristin D. Calia 11/6/15
REGISTERED CIVIL ENGINEER DATE

November 13, 2015
PLANS APPROVAL DATE

REGISTERED PROFESSIONAL ENGINEER — K. CALIA No. 62461 Exp. 9/30/17 CIVIL — STATE OF CALIFORNIA

THE STATE OF CALIFORNIA OR ITS OFFICERS OR AGENTS SHALL NOT BE RESPONSIBLE FOR THE ACCURACY OR COMPLETENESS OF SCANNED COPIES OF THIS PLAN SHEET.

FEHR AND PEERS
2990 LAVA RIDGE COURT
SUITE 200
ROSEVILLE, CA 95661

CITY OF CHICO
CAPITAL PROJECT SERVICES
411 MAIN STREET
CHICO, CA 95927

CONDUCTOR SCHEDULE

CONDUCTOR DESIGNATION			NUMBER OF CONDUCTORS RUN NUMBER														
CABLE TYPE	STD	PHASE	1	2	3	4	5	6	7	8	9	10	11	12	13	14	15
12CSC VEH–PED	Ⓛ	5,6,5P							1	1	1	1	1	1	1		1
9CSC VEH–PED	Ⓐ	1,1P / 1P	1 / 1	1													
	Ⓑ	1P	1	1	1												
	Ⓒ	1P,2P	1	1	1												
	Ⓓ	2P	1	1	1												
	Ⓕ	1,2P / 2P	1 / 1	1 / 1	1 / 1		1 / 1										
	Ⓖ	1,2	1	1	1		1	1									
	Ⓗ	5,6P / 6P							1 / 1	1 / 1	1 / 1	1 / 1	1 / 1	1 / 1			
	Ⓘ	5,5P / 6P							1 / 1	1 / 1	1 / 1	1 / 1	1 / 1	1 / 1	1 / 1		
	Ⓙ	5P							1	1	1	1	1	1	1	1	
	Ⓚ	6,6P / 5P							1 / 1	1 / 1	1 / 1	1 / 1	1 / 1	1 / 1	1 / 1	1	
	Ⓛ	5P							1	1	1	1	1	1	1		1
3CSC PPB		APS/PED–HEAD CABLE														2	
		TOTAL 9/3 CSC	4 / 4	4 / 4	3 / 3	– / –	2 / 1	1 / –	3 / 4	3 / 4	3 / 4	3 / 4	3 / 4	3 / 4	2 / 3	3 / 1	– / 1
5CSC VEH	Ⓔ	ø1	1	1	1	1											
#8		LIGHTING	2	2	2		2		2	2	2	2	2	2	2	2	2
#6		CONTROLLER POWER	2														
TYPE B DLC		ø1	9	9													
		ø2	6	6	6												
		ø5							8	8	8	8	8	8	8		
		ø6							9	9	9	9	6				
		TOTAL DLCs PER RUN	15	15	6	–	–	–	17	17	17	17	14	8	8		
EVP CABLE			3	3	3	1	2	1	2	2	2	2	2	2	2	1	1
CONDUIT SIZE			2–3"	2–3"	2–3"	3"	3"	3"	4"	2–3"	2–3"	2–3"	2–3"	2–3"	2–3"	3"	3"
NEW/EXISTING			N	N	N	N	N	N	N	N	N	N	N	N	N	N	N
PERCENT FILL			25	23	16	4	14	5	27	23	23	23	21	19	15	18	10

ALL CONDUCTORS ARE NEW

POLE AND EQUIPMENT SCHEDULE

	STANDARD			VEH SIG MTG				PED SIGNAL MOUNTING		APS		LED LUM	SPECIAL REQUIREMENTS
No.	TYPE	SMA	LMA	ø	MAST ARM	ø	POLE	ø	MOUNTING	ø	ARROW		
Ⓐ	1–B	–	–	–	–	1	TV–1–T	1	SP–1–T	1	→	–	INSTALL COUNTDOWN PEDESTRIAN SIGNAL.
Ⓑ	PPB POST	–	–	–	–	–	–	–	–	1	→	–	SEE PPB POST DETAIL ON SHEET E–18.
Ⓒ	15TS	–	12'	–	–	–	–	2 1	SP–2–T	–	–	ROADWAY 1	INSTALL R3–1 ON SIGNAL POLE. INSTALL COUNTDOWN PEDESTRIAN SIGNALS.
Ⓓ	PPB POST	–	–	–	–	–	–	–	–	2	←	–	SEE PPB POST DETAIL ON SHEET E–18.
Ⓔ	(16–1–70)	(15')	–	1	(MAS)	1	(SV–1–T)	–	–	–	–	–	EXISTING POLE TO REMAIN.
Ⓕ	15TS	–	12'	–	–	1	SV–1–T	2	SP–1–T	2	→	ROADWAY 1	INSTALL COUNTDOWN PEDESTRIAN SIGNAL.
Ⓖ	(18–3–70)	(30')	–	2 2	(MAT) (MAT)	2 1	~~(SV–1–T)~~ SV–2–TB	–	–	–	–	–	EXISTING POLE TO REMAIN. CONVERT Exist SV–1–T TO SV–2–TB.
Ⓗ	1–B	–	–	–	–	5	TV–1–T	6	SP–1–T	6	←	–	INSTALL COUNTDOWN PEDESTRIAN SIGNAL.
Ⓘ	1–B	–	–	–	–	5	TV–1–T	5	SP–1–T	6	→	–	INSTALL COUNTDOWN PEDESTRIAN SIGNAL.
Ⓙ	PPB POST	–	–	–	–	–	–	–	–	5	←	–	SEE PPB POST DETAIL ON SHEET E–18.
Ⓚ	26–4–100	45'	12'	6 6	MAT MAS	–	–	6	SP–1–T	–	–	ROADWAY 1	INSTALL COUNTDOWN PEDESTRIAN SIGNAL.
Ⓛ	19–4–100	25'	12'	5 5	MAT MAS	6 5	SV–2–TB	5	SP–1–T	5	←	ROADWAY 1	INSTALL R3–2 ON SIGNAL MAST ARM. INSTALL COUNTDOWN PEDESTRIAN SIGNAL.

( ) = DENOTES EXISTING

MODIFY SIGNAL AND LIGHTING (LOCATION 2)

NO SCALE

E-6

APPROVED FOR ELECTRICAL WORK ONLY

REVISED BY | DATE REVISED
M. JOHNSTONE | K. CALIA
CALCULATED–DESIGNED BY | CHECKED BY
KRISTIN D. CALIA
CONSULTANT FUNCTIONAL SUPERVISOR
STATE OF CALIFORNIA – DEPARTMENT OF TRANSPORTATION
Caltrans

LAST REVISION | DATE PLOTTED => $DATE
00–00–00 | TIME PLOTTED => $TIME

BORDER LAST REVISED 7/2/2010 | USERNAME => $USER | DGN FILE => $REQUEST | RELATIVE BORDER SCALE IS IN INCHES 0 1 2 3 | UNIT 0000 | PROJECT NUMBER & PHASE 0313000246

FOR ACCURATE RIGHT OF WAY AND ACCESS DATA, CONTACT RIGHT OF WAY ENGINEERING AT THE DISTRICT OFFICE.

PROJECT NOTES:

24 Exist CONDUIT TO REMAIN. SEE SHEET E-5 AND E-6 FOR CONDUCTORS.

36 Exist CONDUCTORS AND CABLES TO REMAIN.

37 Exist SIGNAL EQUIPMENT TO REMAIN.

40 SEE SHEET E-14 FOR LIGHTING MODIFICATIONS.

73 Exist TYPE III-AF SERVICE EQUIPMENT ENCLOSURE TO REMAIN. SEE SERVICE WIRING DIAGRAM 'D' ON SHEET E-15.

118 RS Exist MODEL 2070 CONTROLLER AND MODEL 332 CABINET. INSTALL NEW CONTROLLER ASSEMBLY PER SHEET E-5.

Dist	COUNTY	ROUTE	POST MILES TOTAL PROJECT	SHEET No.	TOTAL SHEETS
03	But	32	10.1/10.5	88	126

Kristin D. Calia 11/6/15
REGISTERED CIVIL ENGINEER DATE

November 13, 2015
PLANS APPROVAL DATE

REGISTERED PROFESSIONAL ENGINEER — K. CALIA No. 62461 Exp. 9/30/17 CIVIL — STATE OF CALIFORNIA

THE STATE OF CALIFORNIA OR ITS OFFICERS OR AGENTS SHALL NOT BE RESPONSIBLE FOR THE ACCURACY OR COMPLETENESS OF SCANNED COPIES OF THIS PLAN SHEET.

FEHR AND PEERS
2990 LAVA RIDGE COURT
SUITE 200
ROSEVILLE, CA 95661

CITY OF CHICO
CAPITAL PROJECT SERVICES
411 MAIN STREET
CHICO, CA 95927

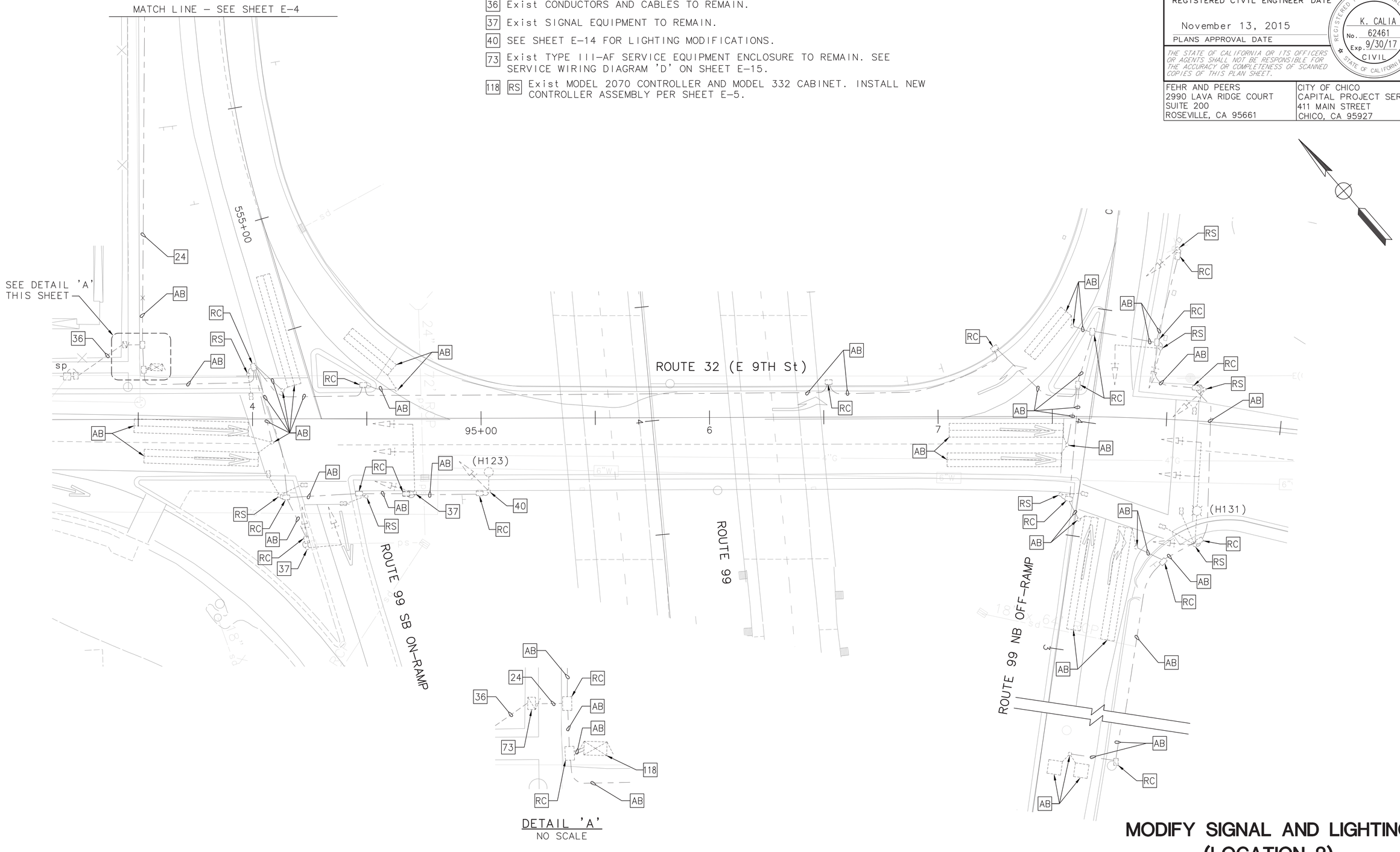

DETAIL 'A'
NO SCALE

MODIFY SIGNAL AND LIGHTING (LOCATION 2)

SCALE: 1"=20'

E-7

APPROVED FOR ELECTRICAL WORK ONLY

STATE OF CALIFORNIA – DEPARTMENT OF TRANSPORTATION
Caltrans®

CONSULTANT FUNCTIONAL SUPERVISOR: KRISTIN D. CALIA

CALCULATED-DESIGNED BY: M. JOHNSTONE
CHECKED BY: K. CALIA

REVISED BY	DATE REVISED

LAST REVISION — DATE PLOTTED => $DATE, TIME PLOTTED => $TIME: 00-00-00

BORDER LAST REVISED 7/2/2010 | USERNAME => $USER, DGN FILE => $REQUEST | RELATIVE BORDER SCALE IS IN INCHES 0 1 2 3 | UNIT 0000 | PROJECT NUMBER & PHASE 0313000246

FOR ACCURATE RIGHT OF WAY AND ACCESS DATA, CONTACT RIGHT OF WAY ENGINEERING AT THE DISTRICT OFFICE.

PROJECT NOTES:

1. INSTALL DEPARTMENT-FURNISHED MODEL 332L CABINET WITH MODEL 2070 CONTROLLER, DRAWER SHELF ASSEMBLY AND 2070 6-A MODEM. INSTALL DEPARTMENT-FURNISHED BATTERY BACK UP SYSTEM CABINET AND BATTERY BACK UP COMPONENTS. FURNISH AND INSTALL BATTERIES, EVP PHASE SELECTOR, AND MAKE FINAL CONNECTIONS.
2. INSTALL 12'X 5'-2" X 3.5" PCC CONTROLLER PAD AND CONTROLLER/BBS FOUNDATION. SEE SHEET E-17 FOR MODIFIED MODEL 332L CABINET FOUNDATION DETAILS ONLY.
18. 2"C, 1 SIC.
34. FURNISH AND INSTALL TYPE III-AF SERVICE EQUIPMENT ENCLOSURE PER SERVICE WIRING DIAGRAM 'E' ON SHEET E-15.
43. 2"C, 1 DLC.
44. 2"C, 3 DLC.
53. 2"C, 2#6 (120 V SIGNAL), 2#8 (INTERSECTION LTG).
54. 2"C, 3#2 (SERVICE).
55. INSTALL MODIFIED TYPE 'D' BICYCLE LOOP DETECTOR PER DETAIL ON SHEET E-18.
58. 2"C, 9 DLC.
59. 2"C, 10 DLC.
64. Exist IRRIGATION CONTROLLER TO REMAIN.
65. Exist TYPE III-AF SERVICE EQUIPMENT ENCLOSURE FOR PARK-N-RIDE LIGHTING AND IRRIGATION TO REMAIN.
66. Exist 2-1/2"C, 4#10.
67. Exist 2-1/2"C, 6#10.
68. Exist 2"C, 2#10.
75. INSTALL LEFT TURN SIGNAL WITH RED BALL PER DETAIL ON SHEET E-18.
119. INSTALL LOOP DETECTORS PER LOOP DETECTOR LAYOUT DETAIL ON SHEET E-18.

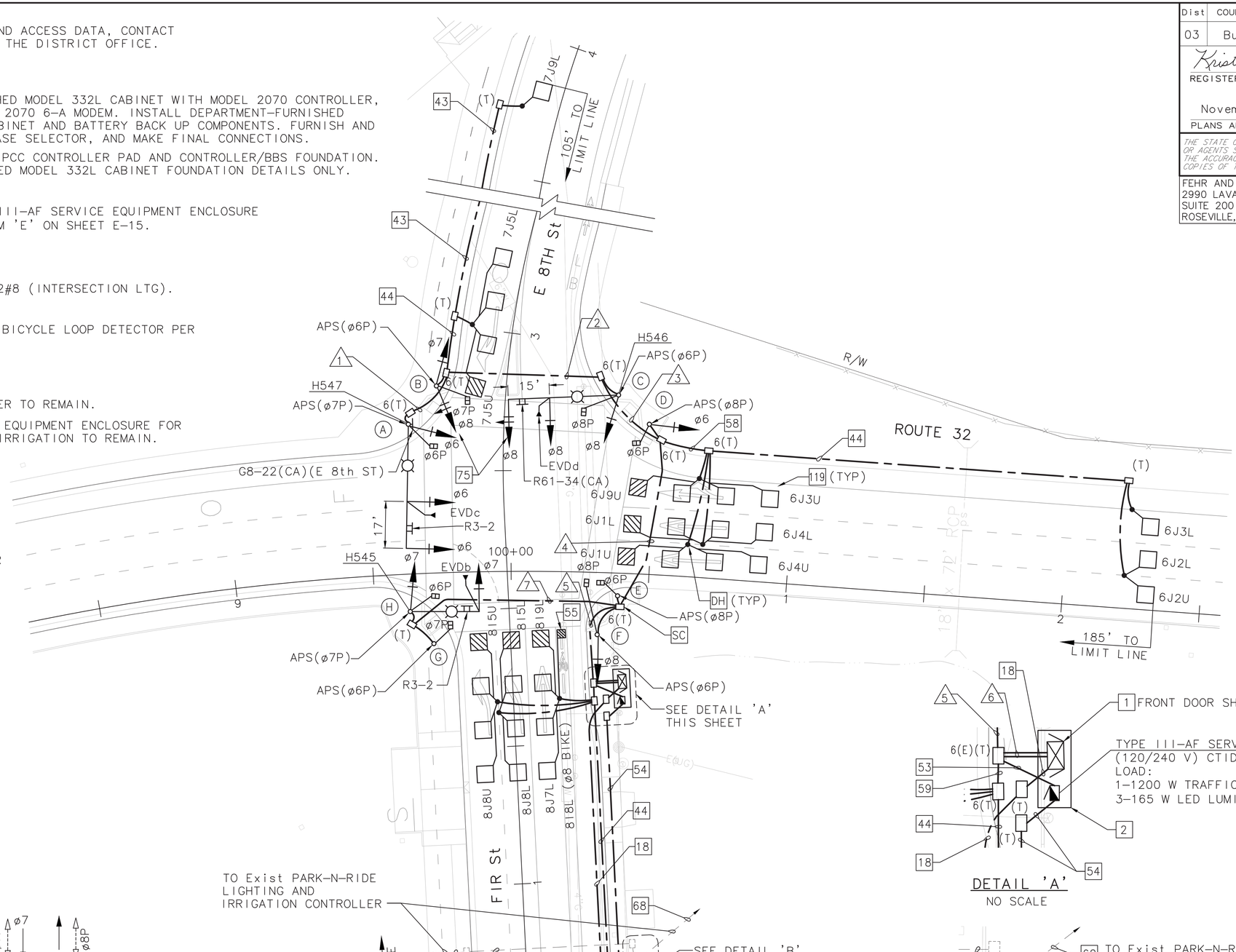

PROPOSED PHASE DIAGRAM

EMERGENCY VEHICLE PREEMPTION
EVDb = ø7
EVDc = ø6
EVDd = ø8

DESIGN SPEED: ROUTE 32 (WB) = 35 MPH
FIR St (NB) = 30 MPH
FIR St (SB) = 25 MPH

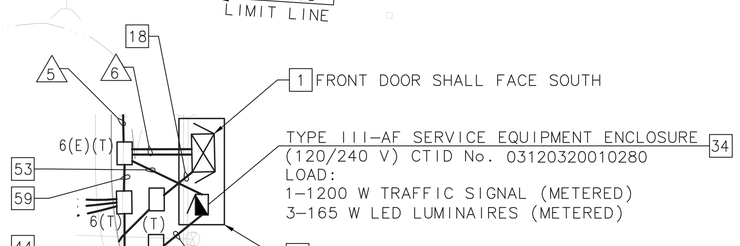

DETAIL 'A'
NO SCALE

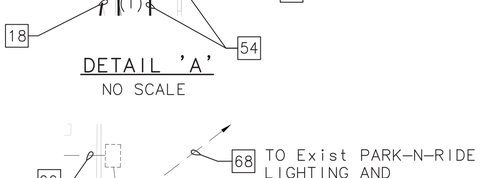

DETAIL 'B'
NO SCALE

SIGNAL AND LIGHTING (LOCATION 3)

SCALE: 1"=20'

E-8

Dist	COUNTY	ROUTE	POST MILES TOTAL PROJECT	SHEET No.	TOTAL SHEETS
03	But	32	10.1/10.5	89	126

Kristin D. Calia 11/6/15
REGISTERED CIVIL ENGINEER DATE

November 13, 2015
PLANS APPROVAL DATE

REGISTERED PROFESSIONAL ENGINEER — K. CALIA No. 62461 Exp. 9/30/17 CIVIL — STATE OF CALIFORNIA

THE STATE OF CALIFORNIA OR ITS OFFICERS OR AGENTS SHALL NOT BE RESPONSIBLE FOR THE ACCURACY OR COMPLETENESS OF SCANNED COPIES OF THIS PLAN SHEET.

FEHR AND PEERS
2990 LAVA RIDGE COURT
SUITE 200
ROSEVILLE, CA 95661

CITY OF CHICO
CAPITAL PROJECT SERVICES
411 MAIN STREET
CHICO, CA 95927

REVISED BY | DATE REVISED
M. JOHNSTONE | K. CALIA
CALCULATED-DESIGNED BY | CHECKED BY
SUPERVISOR | CONSULTANT FUNCTIONAL SUPERVISOR
KRISTIN D. CALIA

STATE OF CALIFORNIA - DEPARTMENT OF TRANSPORTATION
Caltrans

APPROVED FOR ELECTRICAL WORK ONLY

LAST REVISION | DATE PLOTTED => $DATE
00-00-00 | TIME PLOTTED => $TIME

BORDER LAST REVISED 7/2/2010 | USERNAME => $USER | DGN FILE => $REQUEST | RELATIVE BORDER SCALE IS IN INCHES 0 1 2 3 | UNIT 0000 | PROJECT NUMBER & PHASE 0313000246

FOR ACCURATE RIGHT OF WAY AND ACCESS DATA, CONTACT
RIGHT OF WAY ENGINEERING AT THE DISTRICT OFFICE.

Dist	COUNTY	ROUTE	POST MILES TOTAL PROJECT	SHEET No.	TOTAL SHEETS
03	But	32	10.1/10.5	90	126

Kristin D. Calia 11/6/15
REGISTERED CIVIL ENGINEER DATE

November 13, 2015
PLANS APPROVAL DATE

REGISTERED PROFESSIONAL ENGINEER
K. CALIA
No. 62461
Exp. 9/30/17
CIVIL
STATE OF CALIFORNIA

THE STATE OF CALIFORNIA OR ITS OFFICERS OR AGENTS SHALL NOT BE RESPONSIBLE FOR THE ACCURACY OR COMPLETENESS OF SCANNED COPIES OF THIS PLAN SHEET.

FEHR AND PEERS
2990 LAVA RIDGE COURT
SUITE 200
ROSEVILLE, CA 95661

CITY OF CHICO
CAPITAL PROJECT SERVICES
411 MAIN STREET
CHICO, CA 95927

CONDUCTOR SCHEDULE

CONDUCTOR DESIGNATION			NUMBER OF CONDUCTORS						
CABLE TYPE	STD	PHASE	RUN NUMBER						
			1	2	3	4	5	6	7
12 CSC	(B)	ø7,ø8,ø7P		1	1	1	1	1	
9 CSC	(A)	ø6,ø6P	1	1	1	1	1	1	
	(C)	ø8,ø8P			1	1	1	1	
	(D)	ø6,ø6P				1	1	1	
	(F)	ø8,ø8P					1	1	
	(H)	ø7,ø6P					1	1	1
		APS/PED-HEAD CABLE	2		2				
		TOTAL 9 CSC	3	1	4	3	5	5	1
5 CSC	(E)	ø6P					1	1	
	(G)	ø7P					1	1	1
		TOTAL 5 CSC					2	2	1
3 CSC	(A)	ø7P PPB	1	1	1	1	1	1	
	(B)	ø6P PPB		1	1	1	1	1	
	(C)	ø6P PPB			1	1	1	1	
	(D)	ø8P PPB				1	1	1	
	(E)	ø8P PPB					1	1	
	(F)	ø6P PPB					1	1	
	(G)	ø6P PPB					1	1	1
	(H)	ø7P PPB					1	1	1
		TOTAL 3 CSC	1	2	3	4	8	8	2
#8		LIGHTING	2	2	2	2	2		2
#6		CONTROLLER POWER						2	
TYPE B DLC		ø6				9	9	9	
		ø7		3	3	3	3	3	
		ø8						10	
		TOTAL DLCs PER RUN		3	3	12	12	22	
EVP CABLE			1	1	2	2	3	3	1
CONDUIT SIZE			3"	3"	2-3"	2-3"	3-3"	3-3"	3"
PERCENT FILL			18	19	17	20	21	25	13

POLE AND EQUIPMENT SCHEDULE

	STANDARD			VEH SIG MTG				PED SIGNAL MOUNTING		APS		LED LUM	SPECIAL REQUIREMENTS
No.	TYPE	SMA	LMA	ø	MAST ARM	ø	POLE	ø	MOUNTING	ø	ARROW		
(A)	26-4-100	45'	12'	6 6	MAT MAS	6	SV-1-T	6	SP-1-T	7	←	ROADWAY 1	INSTALL R3-2 ON SIGNAL MAST ARM. INSTALL G8-22(CA) (E 8th St) ON SIGNAL POLE. INSTALL COUNTDOWN PEDESTRIAN SIGNAL.
(B)	1-B	–	–	–	–	7 8	TV-2-T	7	SP-1-T	6	→	–	INSTALL COUNTDOWN PEDESTRIAN SIGNAL.
(C)	26-4-100	40'	12'	8 8	MAT MAS	8	SV-1-T	8	SP-1-T	6	←	ROADWAY 1	INSTALL R61-34(CA) ON SIGNAL MAST ARM. INSTALL COUNTDOWN PEDESTRIAN SIGNAL.
(D)	1-B	–	–	–	–	6	TV-1-T	6	SP-1-T	8	→	–	INSTALL COUNTDOWN PEDESTRIAN SIGNAL.
(E)	1-B (7')	–	–	–	–	–	–	6	TP-1-T	8	←	–	INSTALL COUNTDOWN PEDESTRIAN SIGNAL.
(F)	1-B	–	–	–	–	8	TV-1-T	8	SP-1-T	6	→	–	INSTALL COUNTDOWN PEDESTRIAN SIGNAL.
(G)	1-B (7')	–	–	–	–		–	7	TP-1-T	6	←	–	INSTALL COUNTDOWN PEDESTRIAN SIGNAL.
(H)	19-3-100	25'	12'	7	MAT	7	SV-1-T	6	SP-1-T	7	→	ROADWAY 1	INSTALL R3-2 ON SIGNAL MAST ARM. INSTALL COUNTDOWN PEDESTRIAN SIGNAL.

( ) = DENOTES EXISTING

SIGNAL AND LIGHTING (LOCATION 3)

NO SCALE

E-9

APPROVED FOR ELECTRICAL WORK ONLY

REVISED BY | DATE REVISED
M. JOHNSTONE | K. CALIA
CALCULATED-DESIGNED BY | CHECKED BY
CONSULTANT FUNCTIONAL SUPERVISOR: KRISTIN D. CALIA
STATE OF CALIFORNIA - DEPARTMENT OF TRANSPORTATION
Caltrans

LAST REVISION | DATE PLOTTED => $$DATE
00-00-00 | TIME PLOTTED => $TIME

BORDER LAST REVISED 7/2/2010 | USERNAME => $USER | DGN FILE => $REQUEST | RELATIVE BORDER SCALE IS IN INCHES 0 1 2 3 | UNIT 0000 | PROJECT NUMBER & PHASE 0313000246

FOR ACCURATE RIGHT OF WAY AND ACCESS DATA, CONTACT
RIGHT OF WAY ENGINEERING AT THE DISTRICT OFFICE.

PROJECT NOTES:

1. INSTALL DEPARTMENT–FURNISHED MODEL 332L CABINET WITH MODEL 2070 CONTROLLER, DRAWER SHELF ASSEMBLY AND 2070 6–A MODEM. INSTALL DEPARTMENT–FURNISHED BATTERY BACK UP SYSTEM CABINET AND BATTERY BACK UP COMPONENTS. FURNISH AND INSTALL BATTERIES, EVP PHASE SELECTOR, AND MAKE FINAL CONNECTIONS.
2. INSTALL 12'X 5'–2" X 3.5" PCC CONTROLLER PAD AND CONTROLLER/BBS FOUNDATION. SEE SHEET E–17 FOR MODIFIED MODEL 332L CABINET FOUNDATION DETAILS ONLY.
18. 2"C, 1 SIC.
30. 2"C, 8 DLC.
31. 2"C, 3 SIC.
43. 2"C, 1 DLC.
53. 2"C, 2#6 (120 V SIGNAL), 2#8 (INTERSECTION LTG).
54. 2"C, 3#2 (SERVICE).
55. INSTALL MODIFIED TYPE 'D' BICYCLE LOOP DETECTOR PER DETAIL ON SHEET E–18.
63. FURNISH AND INSTALL TYPE III–AF SERVICE EQUIPMENT ENCLOSURE PER SERVICE WIRING DIAGRAM 'E' ON SHEET E–15.
74. 2"C, 2#8 (240 V INTERSECTION LTG).
119. INSTALL LOOP DETECTORS PER LOOP DETECTOR LAYOUT DETAIL ON SHEET E–18.

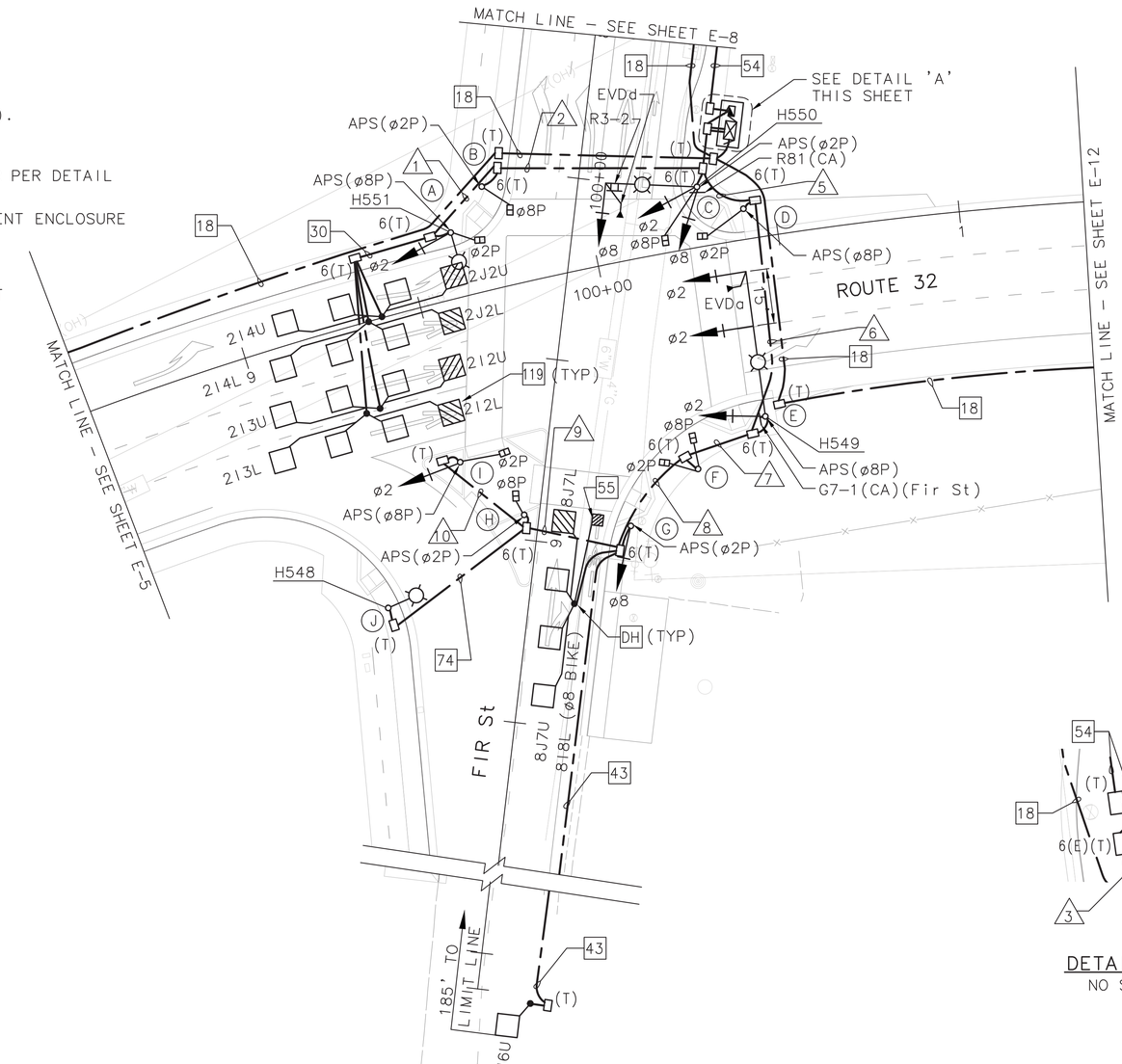

PROPOSED PHASE DIAGRAM

EMERGENCY VEHICLE PREEMPTION
EVDa = ø2
EVDd = ø8

DESIGN SPEED: ROUTE 32 (EB) = 35 MPH
FIR St (NB) = 35 MPH

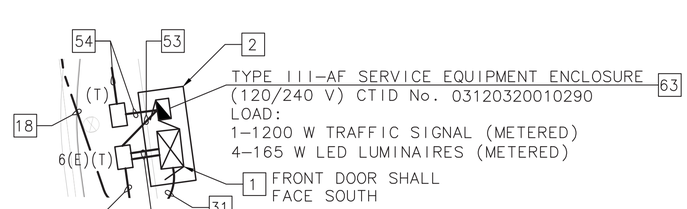

DETAIL 'A'
NO SCALE

SIGNAL AND LIGHTING (LOCATION 4)

SCALE: 1"=20'

E-10

Dist	COUNTY	ROUTE	POST MILES TOTAL PROJECT	SHEET No.	TOTAL SHEETS
03	But	32	10.1/10.5	91	126

Kristin D. Calia 11/6/15
REGISTERED CIVIL ENGINEER DATE

November 13, 2015
PLANS APPROVAL DATE

REGISTERED PROFESSIONAL ENGINEER — K. CALIA No. 62461 Exp. 9/30/17 CIVIL — STATE OF CALIFORNIA

THE STATE OF CALIFORNIA OR ITS OFFICERS OR AGENTS SHALL NOT BE RESPONSIBLE FOR THE ACCURACY OR COMPLETENESS OF SCANNED COPIES OF THIS PLAN SHEET.

FEHR AND PEERS
2990 LAVA RIDGE COURT
SUITE 200
ROSEVILLE, CA 95661

CITY OF CHICO
CAPITAL PROJECT SERVICES
411 MAIN STREET
CHICO, CA 95927

REVISED BY	DATE REVISED

CALCULATED–DESIGNED BY: M. JOHNSTONE
CHECKED BY: K. CALIA
CONSULTANT FUNCTIONAL SUPERVISOR: KRISTIN D. CALIA
STATE OF CALIFORNIA – DEPARTMENT OF TRANSPORTATION

APPROVED FOR ELECTRICAL WORK ONLY

LAST REVISION — DATE PLOTTED => $DATE
00–00–00 TIME PLOTTED => $TIME

FOR ACCURATE RIGHT OF WAY AND ACCESS DATA, CONTACT
RIGHT OF WAY ENGINEERING AT THE DISTRICT OFFICE.

Dist	COUNTY	ROUTE	POST MILES TOTAL PROJECT	SHEET No.	TOTAL SHEETS
03	But	32	10.1/10.5	92	126

Kristin D. Calia 11/6/15
REGISTERED CIVIL ENGINEER DATE

November 13, 2015
PLANS APPROVAL DATE

REGISTERED PROFESSIONAL ENGINEER
K. CALIA
No. 62461
Exp. 9/30/17
CIVIL
STATE OF CALIFORNIA

THE STATE OF CALIFORNIA OR ITS OFFICERS OR AGENTS SHALL NOT BE RESPONSIBLE FOR THE ACCURACY OR COMPLETENESS OF SCANNED COPIES OF THIS PLAN SHEET.

FEHR AND PEERS
2990 LAVA RIDGE COURT
SUITE 200
ROSEVILLE, CA 95661

CITY OF CHICO
CAPITAL PROJECT SERVICES
411 MAIN STREET
CHICO, CA 95927

CONDUCTOR SCHEDULE

CONDUCTOR DESIGNATION			NUMBER OF CONDUCTORS									
CABLE TYPE	STD	PHASE	RUN NUMBER									
			1	2	3	4	5	6	7	8	9	10
12 CSC	(C)	ø2,ø8,ø8P			1	1						
9 CSC	(A)	ø2,ø2P	1	1	1	1						
	(F)	ø2P,ø8P			1	1	1	1	1			
	(I)	ø2,ø2P			1	1	1	1	1	1	1	1
	APS/PED-HEAD CABLE		2				2		1	1		2
	TOTAL 9 CSC		3	1	3	3	4	2	3	2	1	3
5 CSC	(B)	ø8P		1	1	1						
	(D)	ø2P			1	1	1					
	(E)	ø2			1	1	1	1				
	(G)	ø8			1	1	1	1	1	1		
	(H)	ø8P			1	1	1	1	1	1	1	
	TOTAL 5 CSC		–	1	5	5	4	3	2	2	1	–
3 CSC	(A)	ø8P PPB	1	1	1	1						
	(B)	ø2P PPB		1	1	1						
	(C)	ø2P PPB			1	1						
	(D)	ø8P PPB			1	1	1					
	(E)	ø8P PPB			1	1	1	1				
	(G)	ø2P PPB			1	1	1	1	1	1		
	(H)	ø2P PPB			1	1	1	1	1	1	1	
	(I)	ø8P PPB			1	1	1	1	1	1	1	1
	TOTAL 3 CSC		1	2	8	8	5	4	3	3	2	1
#8	LIGHTING		2	2	2		2	2	2	2	2	
#6	CONTROLLER POWER					2						
TYPE B DLC	ø2		8	8	8	8						
	ø8				4	4	4	4	4	4		
	TOTAL DLCs PER RUN		8	8	12	12	4	4	4	4	–	–
EVP CABLE					2	2	1	1				
CONDUIT SIZE			3"	3"	3–3"	3–3"	2–3"	2–3"	2–3"	3"	3"	3"
PERCENT FILL			25	20	20	21	22	15	15	25	12	15

POLE AND EQUIPMENT SCHEDULE

	STANDARD			VEH SIG MTG				PED SIGNAL MOUNTING		APS		LED LUM	SPECIAL REQUIREMENTS
No.	TYPE	SMA	LMA	ø	MAST ARM	ø	POLE	ø	MOUNTING	ø	ARROW		
(A)	15TS	–	12'	–	–	2	SV-1-T	2	SP-1-T	8	←	ROADWAY 1	INSTALL COUNTDOWN PEDESTRIAN SIGNAL.
(B)	1-B (7')	–	–	–	–	–	–	8	TP-1-T	2	→	–	INSTALL COUNTDOWN PEDESTRIAN SIGNAL.
(C)	19-3-100	25'	12'	8	MAT	2 8	SV-2-TB	8	SP-1-T	2	←	ROADWAY 1	INSTALL R3-2 ON SIGNAL MAST ARM. INSTALL R81(CA) ON SIGNAL POLE. INSTALL COUNTDOWN PEDESTRIAN SIGNAL.
(D)	1-B (7')	–	–	–	–	–	–	2	TP-1-T	8	→	–	INSTALL COUNTDOWN PEDESTRIAN SIGNAL.
(E)	26-4-100	40'	12'	2 2	MAS MAS	2	SV-1-T	–	–	8	←	ROADWAY 1	INSTALL G7-1(CA)(Fir St) ON SIGNAL POLE.
(F)	1-B (7')	–	–	–	–	–	–	2 8	TP-2-T	–	–	–	INSTALL COUNTDOWN PEDESTRIAN SIGNALS.
(G)	1-B	–	–	–	–	8	TV-1-T	–	–	2	→	–	
(H)	1-B (7')	–	–	–	–	–	–	8	TP-1-T	2	←	–	INSTALL COUNTDOWN PEDESTRIAN SIGNAL.
(I)	1-B	–	–	–	–	2	TV-1-T	2	SP-1-T	8	→	–	INSTALL COUNTDOWN PEDESTRIAN SIGNAL.
(J)	TYPE 15	–	12'	–	–	–	–	–	–	–	–	ROADWAY 1	

SIGNAL AND LIGHTING (LOCATION 4)

NO SCALE

E-11

APPROVED FOR ELECTRICAL WORK ONLY

REVISED BY | DATE REVISED
M. JOHNSTONE | K. CALIA
CALCULATED-DESIGNED BY | CHECKED BY
CONSULTANT FUNCTIONAL SUPERVISOR: KRISTIN D. CALIA
STATE OF CALIFORNIA – DEPARTMENT OF TRANSPORTATION
Caltrans®

LAST REVISION | DATE PLOTTED => $DATE
00-00-00 | TIME PLOTTED => $TIME

BORDER LAST REVISED 7/2/2010 | USERNAME => $USER | DGN FILE => $REQUEST | RELATIVE BORDER SCALE IS IN INCHES 0 1 2 3 | UNIT 0000 | PROJECT NUMBER & PHASE 0313000246

FOR ACCURATE RIGHT OF WAY AND ACCESS DATA, CONTACT RIGHT OF WAY ENGINEERING AT THE DISTRICT OFFICE.

PROJECT NOTES:

18 2"C, 1 SIC.

21 Exist 2"C, MT. INSTALL 1 SIC.

Dist	COUNTY	ROUTE	POST MILES TOTAL PROJECT	SHEET No.	TOTAL SHEETS
03	But	32	10.1/10.5	93	126

Kristin D. Calia 11/6/15
REGISTERED CIVIL ENGINEER DATE

November 13, 2015
PLANS APPROVAL DATE

REGISTERED PROFESSIONAL ENGINEER
K. CALIA
No. 62461
Exp. 9/30/17
CIVIL
STATE OF CALIFORNIA

THE STATE OF CALIFORNIA OR ITS OFFICERS OR AGENTS SHALL NOT BE RESPONSIBLE FOR THE ACCURACY OR COMPLETENESS OF SCANNED COPIES OF THIS PLAN SHEET.

FEHR AND PEERS
2990 LAVA RIDGE COURT
SUITE 200
ROSEVILLE, CA 95661

CITY OF CHICO
CAPITAL PROJECT SERVICES
411 MAIN STREET
CHICO, CA 95927

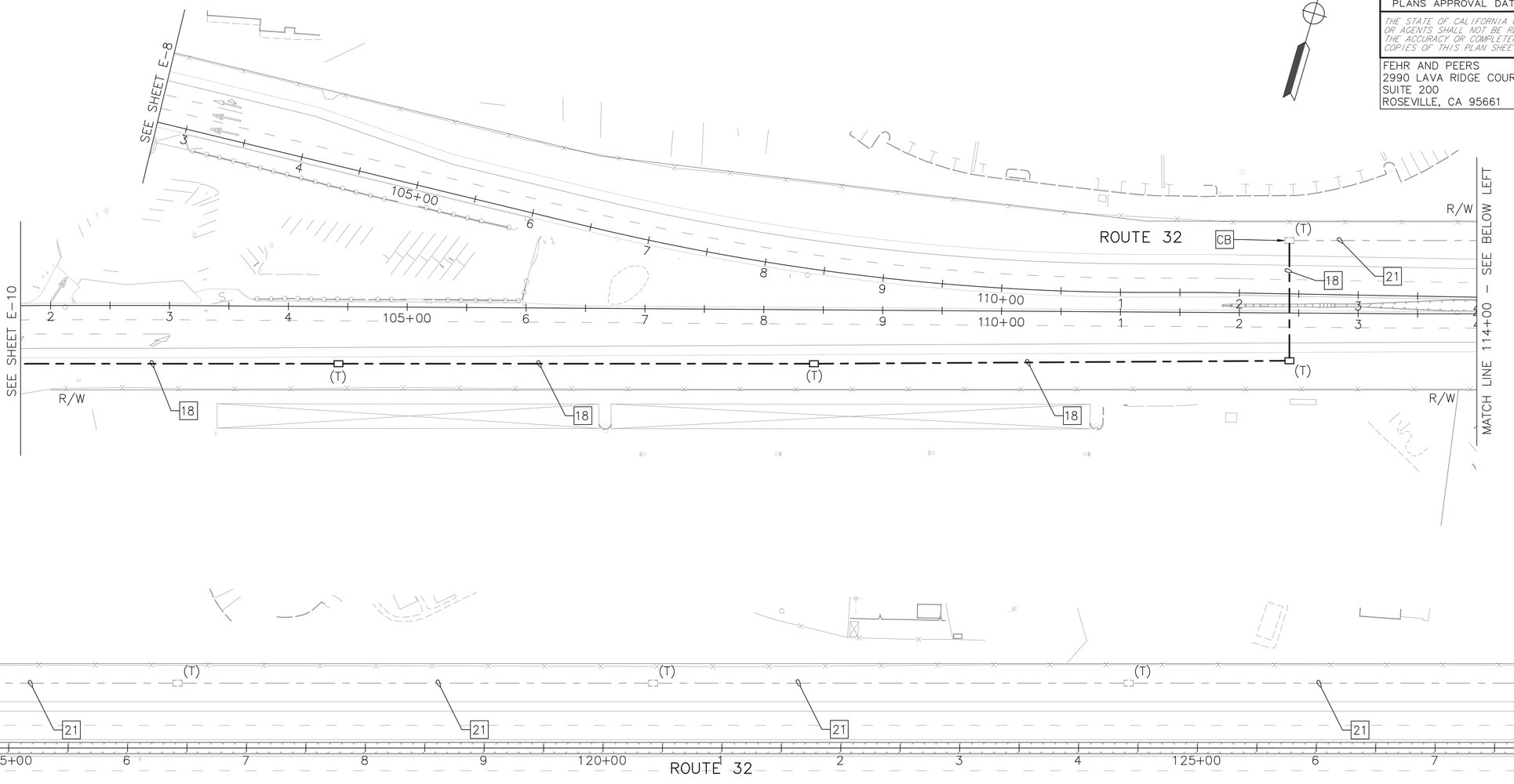

SIGNAL AND LIGHTING (LOCATION 4)

SCALE: 1"=50'

E-12

APPROVED FOR ELECTRICAL WORK ONLY

REVISED BY | DATE REVISED
M. JOHNSTONE | K. CALIA
CALCULATED-DESIGNED BY | CHECKED BY
CONSULTANT FUNCTIONAL SUPERVISOR: KRISTIN D. CALIA
STATE OF CALIFORNIA – DEPARTMENT OF TRANSPORTATION
Caltrans

LAST REVISION | DATE PLOTTED => $DATE
00-00-00 | TIME PLOTTED => $TIME

BORDER LAST REVISED 7/2/2010 | USERNAME => $USER | DGN FILE => $REQUEST | RELATIVE BORDER SCALE IS IN INCHES 0 1 2 3 | UNIT 0000 | PROJECT NUMBER & PHASE 0313000246

Dist	COUNTY	ROUTE	POST MILES TOTAL PROJECT	SHEET No.	TOTAL SHEETS
03	But	32	10.1/10.5	94	126

Kristin D. Calia 11/6/15
REGISTERED CIVIL ENGINEER DATE

November 13, 2015
PLANS APPROVAL DATE

REGISTERED PROFESSIONAL ENGINEER
K. CALIA
No. 62461
Exp. 9/30/17
CIVIL
STATE OF CALIFORNIA

THE STATE OF CALIFORNIA OR ITS OFFICERS OR AGENTS SHALL NOT BE RESPONSIBLE FOR THE ACCURACY OR COMPLETENESS OF SCANNED COPIES OF THIS PLAN SHEET.

FEHR AND PEERS
2990 LAVA RIDGE COURT
SUITE 200
ROSEVILLE, CA 95661

CITY OF CHICO
CAPITAL PROJECT SERVICES
411 MAIN STREET
CHICO, CA 95927

FOR ACCURATE RIGHT OF WAY AND ACCESS DATA, CONTACT RIGHT OF WAY ENGINEERING AT THE DISTRICT OFFICE.

PROJECT NOTES:

18 2"C, 1 SIC.

21 Exist 2"C, MT. INSTALL 1 SIC.

50 Exist 2-4"C, 10-12CSC, 8-3CSC, 2#6, 28 dlc, 4 evc, 2 sic. INSTALL 1 SIC.

81 CONNECT 1 SIC TO Exist MODEL 2070 CONTROLLER. COIL AT LEAST 10' OF SIC IN CABINET.

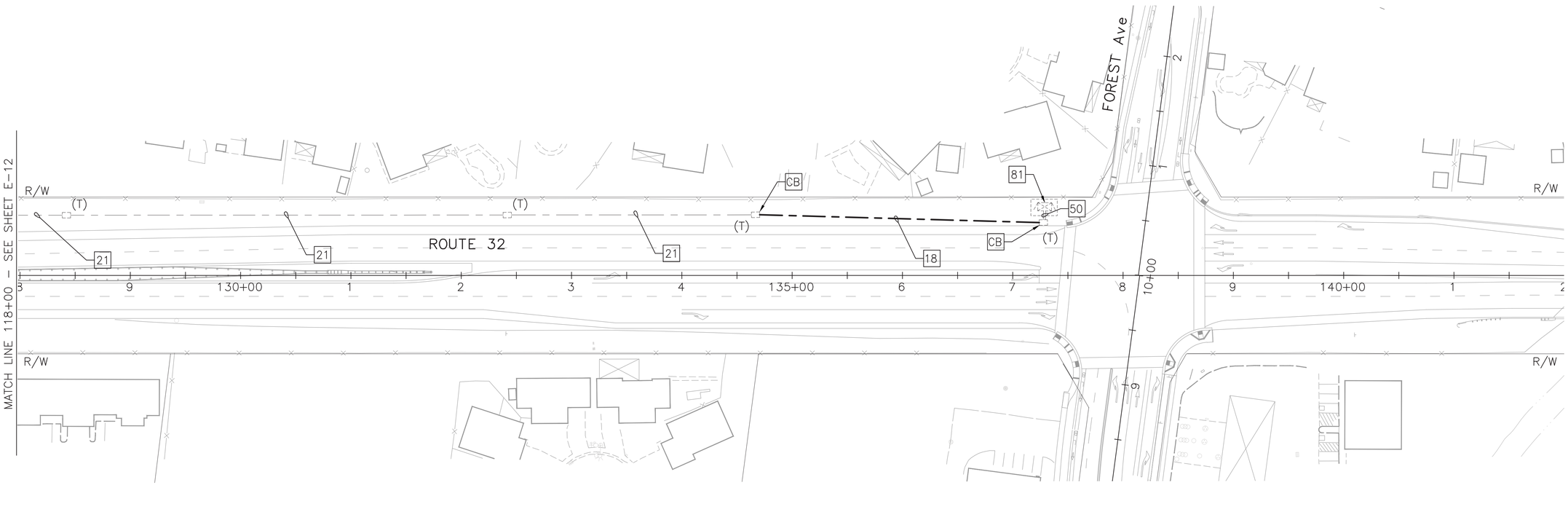

SIGNAL AND LIGHTING (LOCATION 4)

SCALE: 1"=50'

E-13

APPROVED FOR ELECTRICAL WORK ONLY

M. JOHNSTONE — CALCULATED-DESIGNED BY
K. CALIA — CHECKED BY
KRISTIN D. CALIA — CONSULTANT FUNCTIONAL SUPERVISOR
REVISED BY
DATE REVISED

STATE OF CALIFORNIA – DEPARTMENT OF TRANSPORTATION
Caltrans

LAST REVISION 00-00-00 DATE PLOTTED => $DATE TIME PLOTTED => $TIME

BORDER LAST REVISED 7/2/2010 | USERNAME => $USER | DGN FILE => $REQUEST | RELATIVE BORDER SCALE IS IN INCHES 0 1 2 3 | UNIT 0000 | PROJECT NUMBER & PHASE 0313000246

FOR ACCURATE RIGHT OF WAY AND ACCESS DATA, CONTACT RIGHT OF WAY ENGINEERING AT THE DISTRICT OFFICE.

PROJECT NOTES:

3 Exist 2"C, 2#2 (240 V lighting and sign illumination), 2#6 (120 V rm cabinet), 1#2G.

4 Exist 3"C, 2#2 (240 V lighting and sign illumination), 1#2G.

5 Exist 2"C, 2#2 (240 V lighting and sign illumination), 1#2G.

6 Exist 1-1/2"C, 2#2 (240 V lighting and sign illumination), 1#2G.

7 Exist 1-1/2"C, mt.

9 Exist 1-1/2"C, 2#4 (480 V ltg). REMOVE 2#4. INSTALL 2#8 (480 V LTG), 1#8 G.

10 2"C, 2#8 (480 V LIGHTING), 1#8 G.

11 Exist 1-1/2"C, 2#8 (480 V ltg). ADD 1#8 G.

12 Exist 3"C, 2#2 (240 V lighting and sign illumination), 2#6 (120 V rm cabinet), 1 dlc, 1#2G.

13 Exist 2"C, 1-tc.

15 Exist 2"C, 2#8 (120 V tdc).

16 Exist 2"C, 2#2 (240 V lighting and sign illumination), 2#6 (120 V rm cabinet), 3#10 (120 V irrigation controller), 1#2G.

17 Exist 2"C, 3#1 (120/240 V service).

23 2"C, 2#2 (240 V LIGHTING AND SIGN ILLUMINATION), 1#2 G.

49 Exist 2"C, 1 dlc.

60 RC Exist PULL BOX. INSTALL TRAFFIC WELDED PULL BOX IN PLACE.

69 Exist 2"C, 2#2 (240 V lighting and sign illumination), 1#2G. 2"C, 18 dlc.

76 Exist 3"C, 2#6 (120 V rm cabinet), 19 dlc, 1#6G.

80 Exist 3"C, 2#6 (120 V rm cabinet), 1#6G. 3"C, 20 dlc.

92 2"C, MT.

94 Exist 1-1/2"C, 2#2 (240 V ltg AND SIGN ILLUMINATION). REMOVE 2#2, LEAVE MT.

95 Exist 1-1/2"C, 3#10 (irrigation controller)

97 Exist 1½"C MT. INSTALL 2#8 (480 V LTG), 1#8 G.

98 TROUBLESHOOT LUMINAIRE MALFUNCTION.

99 REPLACE Exist HPS LUMINAIRE WITH LED ROADWAY 1 LUMINAIRE.

100 RELOCATE Exist LED LUMINAIRE TO NEW STANDARD.

101 Exist 2"C, 3#2 (service).

102 REPLACE Exist HPS LUMINAIRE WITH LED ROADWAY 2 LUMINAIRE.

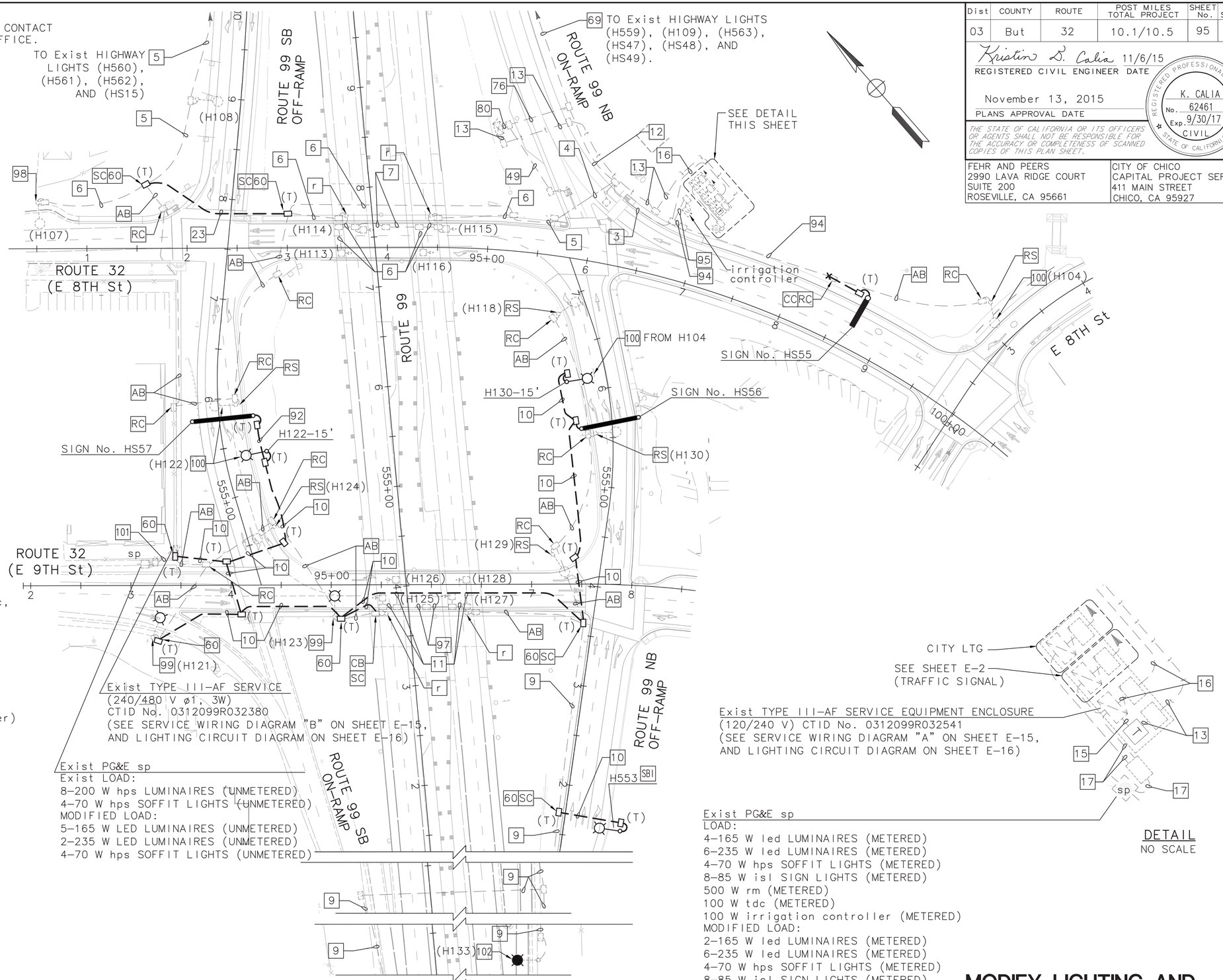

Exist PG&E sp
LOAD:
4-165 W led LUMINAIRES (METERED)
6-235 W led LUMINAIRES (METERED)
4-70 W hps SOFFIT LIGHTS (METERED)
8-85 W isl SIGN LIGHTS (METERED)
500 W rm (METERED)
100 W tdc (METERED)
100 W irrigation controller (METERED)
MODIFIED LOAD:
2-165 W led LUMINAIRES (METERED)
6-235 W led LUMINAIRES (METERED)
4-70 W hps SOFFIT LIGHTS (METERED)
8-85 W isl SIGN LIGHTS (METERED)
500 W rm (METERED)
100 W tdc (METERED)
100 W irrigation controller (METERED)

DETAIL
NO SCALE

APPROVED FOR ELECTRICAL WORK ONLY

Dist	COUNTY	ROUTE	POST MILES TOTAL PROJECT	SHEET No.	TOTAL SHEETS
03	But	32	10.1/10.5	95	126

Kristin D. Calia 11/6/15
REGISTERED CIVIL ENGINEER DATE

November 13, 2015
PLANS APPROVAL DATE

REGISTERED PROFESSIONAL ENGINEER — K. CALIA No. 62461 Exp. 9/30/17 CIVIL — STATE OF CALIFORNIA

THE STATE OF CALIFORNIA OR ITS OFFICERS OR AGENTS SHALL NOT BE RESPONSIBLE FOR THE ACCURACY OR COMPLETENESS OF SCANNED COPIES OF THIS PLAN SHEET.

FEHR AND PEERS
2990 LAVA RIDGE COURT
SUITE 200
ROSEVILLE, CA 95661

CITY OF CHICO
CAPITAL PROJECT SERVICES
411 MAIN STREET
CHICO, CA 95927

MODIFY LIGHTING AND SIGN ILLUMINATION

SCALE: 1"=50'

E-14

REVISED BY: M. JOHNSTONE
DATE REVISED:
CALCULATED-DESIGNED BY: K. CALIA
CHECKED BY: KRISTIN D. CALIA
CONSULTANT FUNCTIONAL SUPERVISOR
STATE OF CALIFORNIA - DEPARTMENT OF TRANSPORTATION
Caltrans

LAST REVISION — DATE PLOTTED => $DATE — TIME PLOTTED => $TIME
00-00-00

BORDER LAST REVISED 7/2/2010
USERNAME => $USER
DGN FILE => $REQUEST
RELATIVE BORDER SCALE IS IN INCHES 0 1 2 3
UNIT 0000
PROJECT NUMBER & PHASE 0313000246

FOR ACCURATE RIGHT OF WAY AND ACCESS DATA, CONTACT
RIGHT OF WAY ENGINEERING AT THE DISTRICT OFFICE.

WIRING DIAGRAM SYMBOLS:

- C — CONTACTOR (LIGHTING)
- N — NEUTRAL BUS
- G — GROUND BUS
- AUTO–TEST SWITCH
- PHOTOELECTRIC UNIT (TYPE V)
- (M) — METER SOCKET WITH MANUAL CIRCUIT CLOSING DEVICE

Dist	COUNTY	ROUTE	POST MILES TOTAL PROJECT	SHEET No.	TOTAL SHEETS
03	But	32	10.1/10.5	96	126

Kristin D. Calia 11/6/15
REGISTERED CIVIL ENGINEER DATE

November 13, 2015
PLANS APPROVAL DATE

REGISTERED PROFESSIONAL ENGINEER — K. CALIA No. 62461 Exp. 9/30/17 CIVIL — STATE OF CALIFORNIA

THE STATE OF CALIFORNIA OR ITS OFFICERS OR AGENTS SHALL NOT BE RESPONSIBLE FOR THE ACCURACY OR COMPLETENESS OF SCANNED COPIES OF THIS PLAN SHEET.

FEHR AND PEERS
2990 LAVA RIDGE COURT
SUITE 200
ROSEVILLE, CA 95661

CITY OF CHICO
CAPITAL PROJECT SERVICES
411 MAIN STREET
CHICO, CA 95927

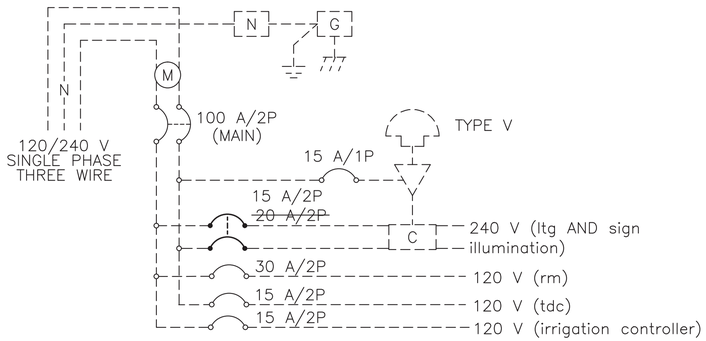

MODIFIED SERVICE WIRING DIAGRAM 'A'
CTID No. 0312099R032541

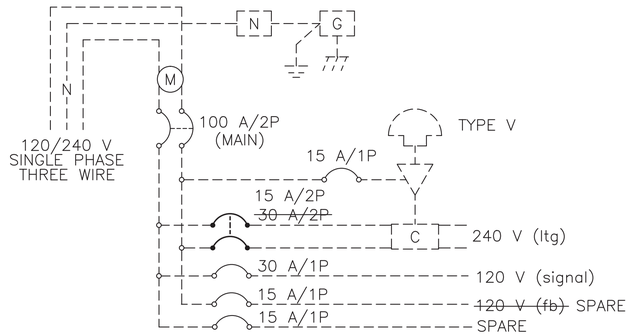

MODIFIED SERVICE WIRING DIAGRAM 'C'
CTID No. 0312099R032560

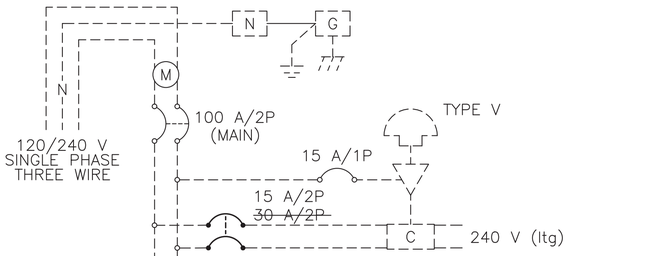

MODIFIED SERVICE WIRING DIAGRAM 'D'
CTID No. 0312099R032381

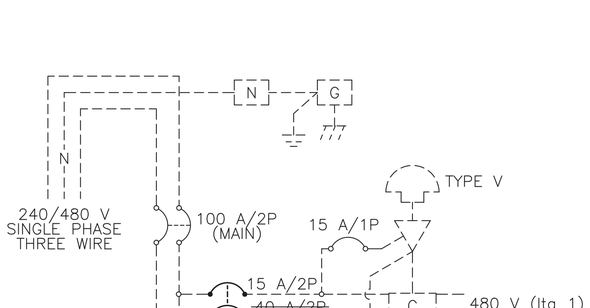

MODIFIED SERVICE WIRING DIAGRAM 'B'
CTID No. 0312099R032380

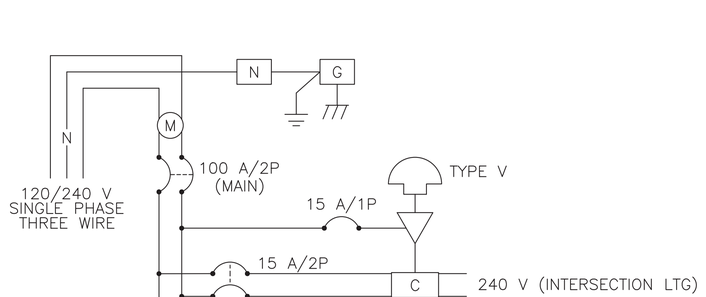

SERVICE WIRING DIAGRAM 'E'
CTID No. 03120320010280
CTID No. 03120320010290

SERVICE WIRING DIAGRAMS

NO SCALE **E-15**

APPROVED FOR ELECTRICAL WORK ONLY

REVISED BY | DATE REVISED
M. JOHNSTONE | K. CALIA
CALCULATED-DESIGNED BY | CHECKED BY
KRISTIN D. CALIA
CONSULTANT FUNCTIONAL SUPERVISOR
STATE OF CALIFORNIA — DEPARTMENT OF TRANSPORTATION
Caltrans

LAST REVISION DATE PLOTTED => $DATE
00-00-00 TIME PLOTTED => $TIME

BORDER LAST REVISED 7/2/2010 | USERNAME => $USER | DGN FILE => $REQUEST | RELATIVE BORDER SCALE IS IN INCHES 0 1 2 3 | UNIT 0000 | PROJECT NUMBER & PHASE 0313000246

FOR ACCURATE RIGHT OF WAY AND ACCESS DATA, CONTACT
RIGHT OF WAY ENGINEERING AT THE DISTRICT OFFICE.

CIRCUIT DIAGRAM LEGEND:

- Exist CONDUCTORS TO BE ABANDONED
- PROPOSED CONDUCTORS
- Exist LUMINAIRE TO REMAIN
- R — Exist LUMINAIRE TO BE REMOVED AND SALVAGED
- Exist TYPE III-AF SERVICE ENCLOSURE.
- NEW LUMINAIRE
- Exist SOFFIT LIGHT

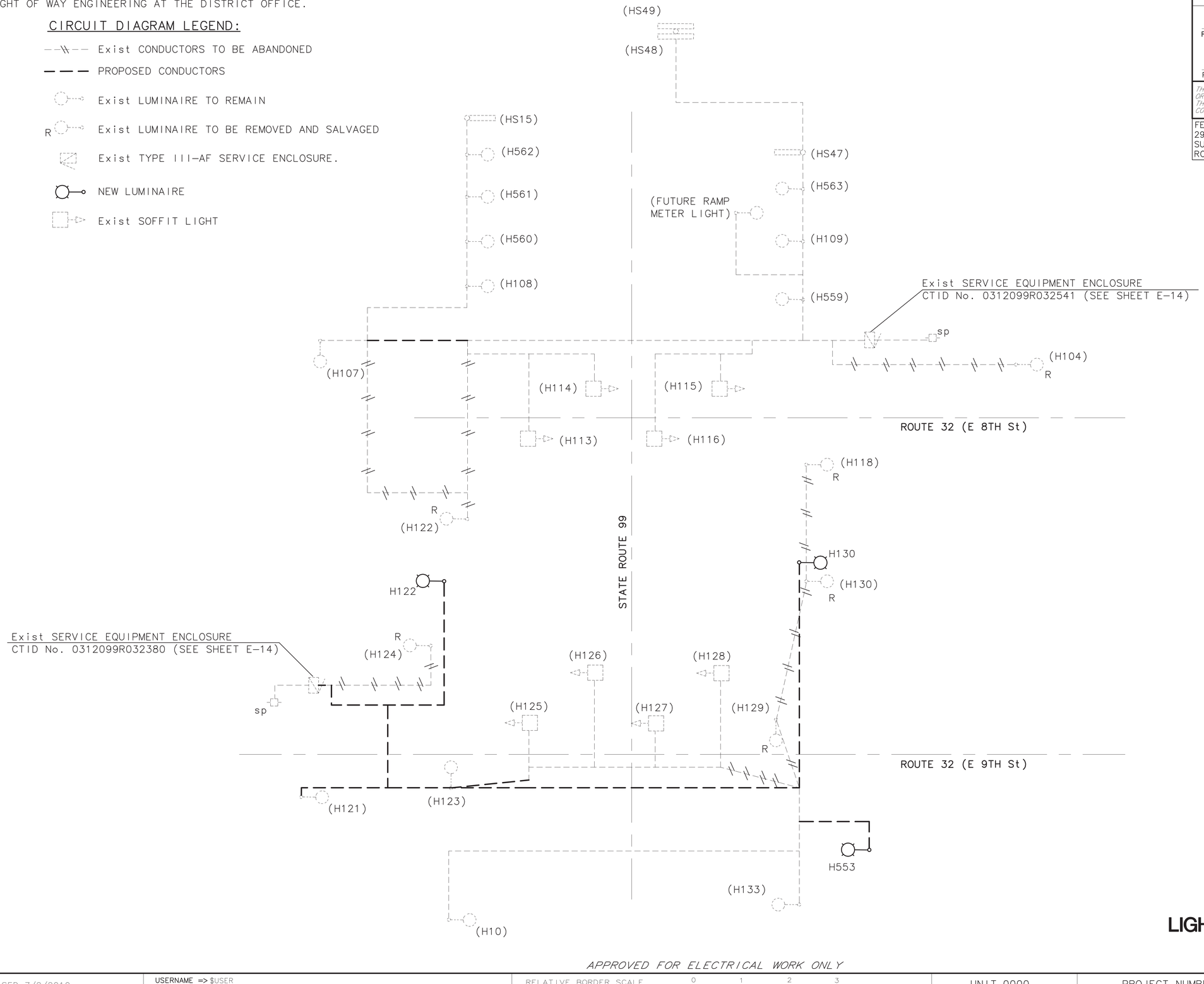

Dist	COUNTY	ROUTE	POST MILES TOTAL PROJECT	SHEET No.	TOTAL SHEETS
03	But	32	10.1/10.5	97	126

Kristin D. Calia 11/6/15
REGISTERED CIVIL ENGINEER DATE

November 13, 2015
PLANS APPROVAL DATE

REGISTERED PROFESSIONAL ENGINEER
K. CALIA
No. 62461
Exp. 9/30/17
CIVIL
STATE OF CALIFORNIA

THE STATE OF CALIFORNIA OR ITS OFFICERS OR AGENTS SHALL NOT BE RESPONSIBLE FOR THE ACCURACY OR COMPLETENESS OF SCANNED COPIES OF THIS PLAN SHEET.

FEHR AND PEERS
2990 LAVA RIDGE COURT
SUITE 200
ROSEVILLE, CA 95661

CITY OF CHICO
CAPITAL PROJECT SERVICES
411 MAIN STREET
CHICO, CA 95927

REVISED BY | DATE REVISED
CALCULATED-DESIGNED BY: M. JOHNSTONE
CHECKED BY: K. CALIA
CONSULTANT FUNCTIONAL SUPERVISOR: KRISTIN D. CALIA
STATE OF CALIFORNIA -- DEPARTMENT OF TRANSPORTATION
Caltrans

LIGHTING CIRCUIT DIAGRAM

NO SCALE

E-16

APPROVED FOR ELECTRICAL WORK ONLY

LAST REVISION | DATE PLOTTED => $DATE
00-00-00 | TIME PLOTTED => $TIME

BORDER LAST REVISED 7/2/2010 | USERNAME => $USER | DGN FILE => $REQUEST | RELATIVE BORDER SCALE IS IN INCHES 0 1 2 3 | UNIT 0000 | PROJECT NUMBER & PHASE 0313000246

Dist	COUNTY	ROUTE	POST MILES TOTAL PROJECT	SHEET No.	TOTAL SHEETS
03	But	32	10.1/10.5	98	126

Kristin D. Calia 11/6/15
REGISTERED CIVIL ENGINEER DATE

November 13, 2015
PLANS APPROVAL DATE

K. CALIA No. 62461 Exp. 9/30/17 CIVIL — REGISTERED PROFESSIONAL ENGINEER — STATE OF CALIFORNIA

THE STATE OF CALIFORNIA OR ITS OFFICERS OR AGENTS SHALL NOT BE RESPONSIBLE FOR THE ACCURACY OR COMPLETENESS OF SCANNED COPIES OF THIS PLAN SHEET.

FEHR AND PEERS
2990 LAVA RIDGE COURT
SUITE 200
ROSEVILLE, CA 95661

CITY OF CHICO
CAPITAL PROJECT SERVICES
411 MAIN STREET
CHICO, CA 95927

FOR ACCURATE RIGHT OF WAY AND ACCESS DATA, CONTACT RIGHT OF WAY ENGINEERING AT THE DISTRICT OFFICE.

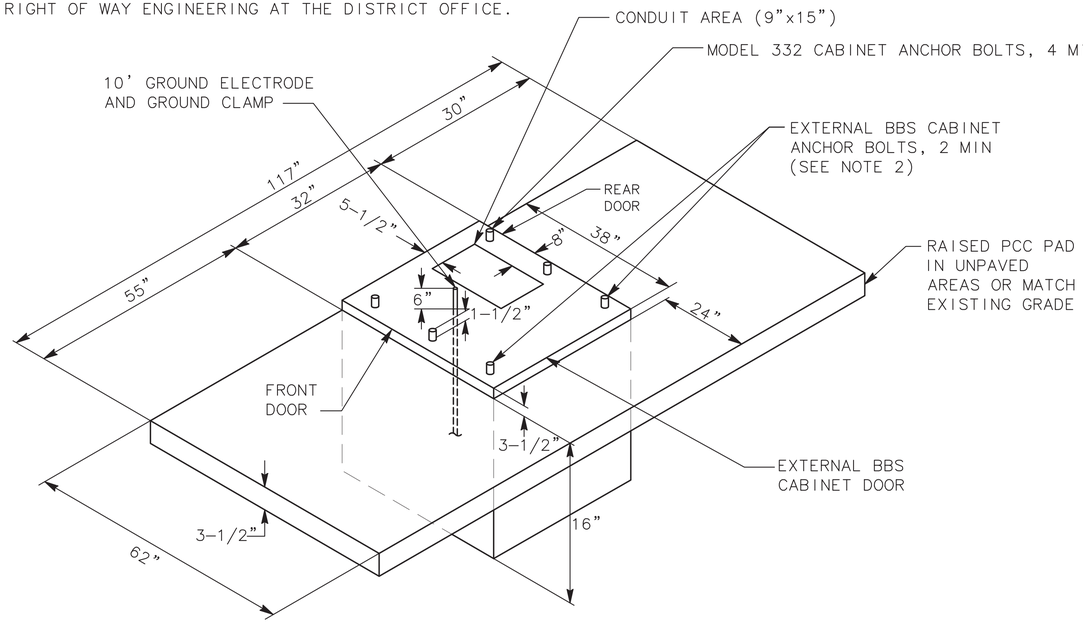

MODIFIED MODEL 332L CABINET FOUNDATION DETAIL FOR BATTERY BACKUP SYSTEM (BBS)

(FOR DIMENSIONS AND DETAILS NOT SHOWN AND ADDITIONAL NOTES, SEE SHEET ES-3C OF THE STANDARD PLANS FOR MODEL 332 CABINET)

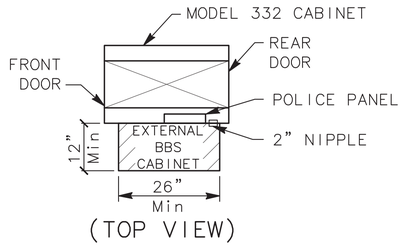

(TOP VIEW)

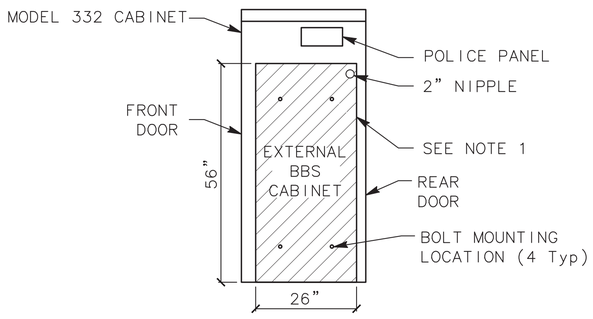

(SIDE VIEW)

EXTERNAL BBS CABINET MOUNTED TO THE MODEL 332 CABINET

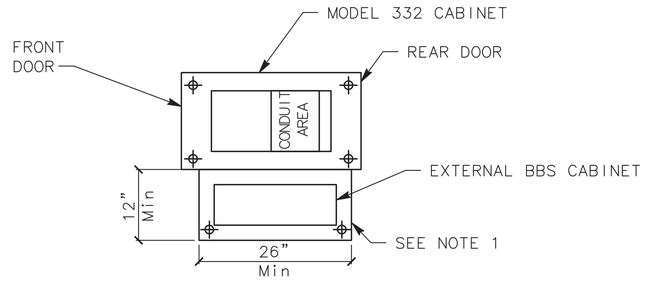

BASE PLAN FOR BBS MOUNTED TO THE MODEL 332 CABINET

(FOR DIMENSIONS AND DETAILS NOT SHOWN, SEE SHEETS A6-1 TO A6-4, CABINET HOUSING DETAILS OF THE TRANSPORTATION ELECTRICAL EQUIPMENT SPECIFICATION (TEES))

NOTES:

1. THE EXTERNAL BBS CABINET SHALL BE MOUNTED TO THE MODEL 332 CABINET WITH FOUR 18-8 STAINLESS STEEL HEX HEAD, FULLY THREADED, 3/8"-16X1" BOLTS; TWO WASHERS PER BOLT, DESIGNED FOR 3/8" BOLTS AND ARE 18-8 STAINLESS STEEL, 1" OUTSIDE DIAMETER, ROUND, AND FLAT; AND ONE K-LOCK NUT PER BOLT THAT IS 18-8 STAINLESS STEEL AND HEX-NUT. THE ENGINEER WILL HAVE TO APPROVE THE BOLT MOUNTING LOCATION PRIOR TO INSTALLATION.
2. THE ANCHOR BOLT SHALL BE 3/4" Dia X 15" WITH A 2"-90° BEND. THE CABINET MANUFACTURER'S SPECIFICATION SHALL DETERMINE THE LOCATION OF THE ANCHOR BOLTS IN THE FOUNDATION. THE ENGINEER WILL HAVE TO APPROVE THE ANCHOR BOLTS AND ITS LOCATION IN THE FOUNDATION PRIOR TO CONNECTION.
3. THE CONTRACTOR SHALL VERIFY THE DIMENSIONS OF THE BBS CABINET PRIOR TO CONSTRUCTING THE FOUNDATION OF THE MODIFIED PORTION OF THE Std MODEL 332 CABINET FOUNDATION. THE ENGINEER WILL HAVE TO APPROVE ANY NECESSARY DEVIATIONS PRIOR TO CONSTRUCTION.
4. ALL DIMENSIONS ARE NOMINAL.

ELECTRICAL SYSTEMS
(BBS FOUNDATION DETAILS)

APPROVED FOR ELECTRICAL WORK ONLY

ELECTRICAL DETAILS

NO SCALE

E-17

REVISED BY | DATE REVISED: M. JOHNSTONE | K. CALIA
CALCULATED-DESIGNED BY | CHECKED BY
CONSULTANT FUNCTIONAL SUPERVISOR: KRISTIN D. CALIA
STATE OF CALIFORNIA - DEPARTMENT OF TRANSPORTATION — Caltrans

LAST REVISION | DATE PLOTTED => $DATE | TIME PLOTTED => $TIME
00-00-00

FOR ACCURATE RIGHT OF WAY AND ACCESS DATA, CONTACT
RIGHT OF WAY ENGINEERING AT THE DISTRICT OFFICE.

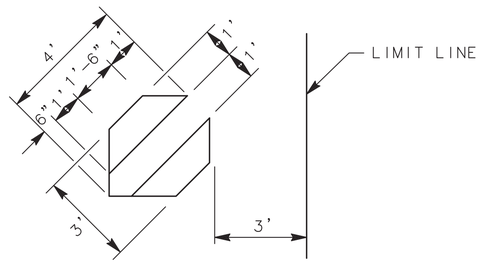

FOR ADDITIONAL DETAILS SEE ES-5B

MODIFIED TYPE D BICYCLE DETECTOR LOOP DETAIL

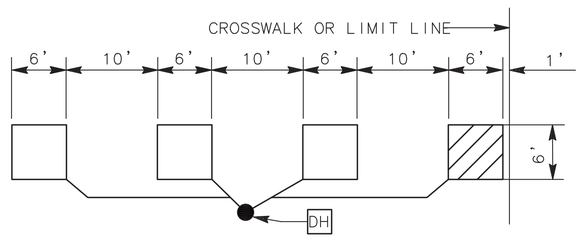

LOOP DETECTOR LAYOUT

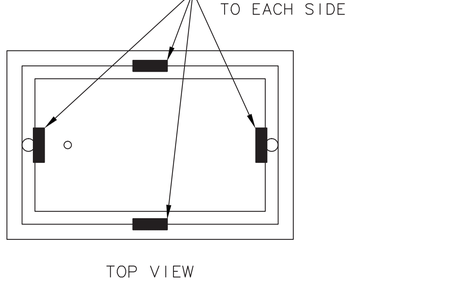

TOP VIEW

WELDED TRAFFIC PULL BOX

FOR ADDITIONAL DETAILS SEE STANDARD PLAN ES-8B.
NOTE: DO NOT BURY TRAFFIC PULL BOX.

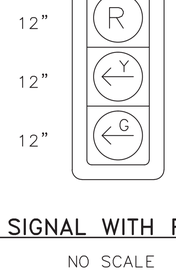

LEFT SIGNAL WITH RED BALL

NO SCALE

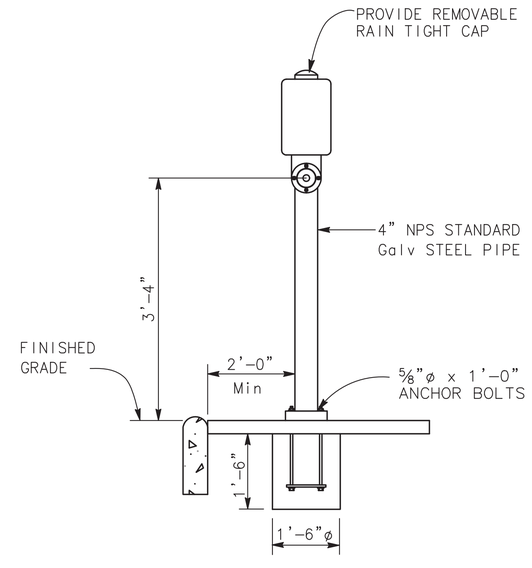

ELEVATION

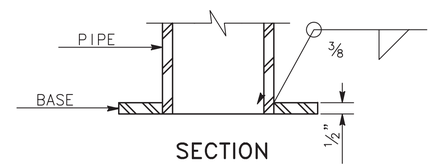

SECTION

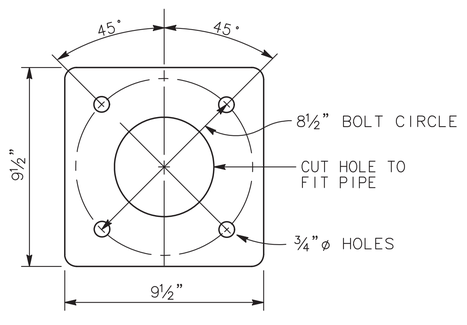

BASE PLATE

PUSH BUTTON ASSEMBLY POST

GENERAL NOTES:
SPECIFICATIONS:
  DESIGN:
    AASHTO STANDARD SPECIFICATIONS FOR STRUCTURAL SUPPORTS FOR HIGHWAY SIGNS, LUMINAIRES, AND TRAFFIC SIGNALS, SIXTH EDITION
LOADING:
  WIND LOADING: 100 MPH
UNIT STRESSES:
  STRUCTURAL STEEL:
    fy = 55,000 psi (ANCHOR BOLTS)
    fy = 36,000 psi (NPS POST)
    fy = 50,000 psi UNLESS OTHERWISE NOTED.
  REINFORCED CONCRETE:
    f'c = 3,600 psi
    fy = 60,000 psi

NOTES:
1. FOR POLE LOCATIONS, SEE "ELECTRICAL PLANS".
2. ALL STEEL SHALL BE GALVANIZED AFTER FABRICATION.
3. DURING POLE ERECTION THE POLE SHALL BE RAKED AS NECESSARY WITH THE USE OF LEVELING NUTS TO PROVIDE A PLUMB POLE AXIS.
4. FOUNDATION DESIGN IS BASED ON LTS-6 ARTICLE 13.6 BROMS' APPROXIMATE PROCEDURE ASSUMING A COHESIONLESS MATERIAL. THE ANGLE OF INTERNAL FRICTION USED IS 30 DEGREES AND UNIT WEIGHT OF SOIL USED IS 120 lbs/ft^3.
5. FOR DETAILS NOT SHOWN, SEE "2010 STANDARD PLANS" AND "2010 RSP".

Dist	COUNTY	ROUTE	POST MILES TOTAL PROJECT	SHEET No.	TOTAL SHEETS
03	But	32	10.1/10.5	99	126

Kristin D. Calia 11/6/15
REGISTERED CIVIL ENGINEER DATE

November 13, 2015
PLANS APPROVAL DATE

REGISTERED PROFESSIONAL ENGINEER
K. CALIA
No. 62461
Exp. 9/30/17
CIVIL
STATE OF CALIFORNIA

THE STATE OF CALIFORNIA OR ITS OFFICERS OR AGENTS SHALL NOT BE RESPONSIBLE FOR THE ACCURACY OR COMPLETENESS OF SCANNED COPIES OF THIS PLAN SHEET.

FEHR AND PEERS
2990 LAVA RIDGE COURT
SUITE 200
ROSEVILLE, CA 95661

CITY OF CHICO
CAPITAL PROJECT SERVICES
411 MAIN STREET
CHICO, CA 95927

ELECTRICAL DETAILS

NO SCALE **E-18**

APPROVED FOR ELECTRICAL WORK ONLY

REVISED BY | DATE REVISED
M. JOHNSTONE | K. CALIA
CALCULATED-DESIGNED BY | CHECKED BY
KRISTIN D. CALIA
CONSULTANT FUNCTIONAL SUPERVISOR
STATE OF CALIFORNIA - DEPARTMENT OF TRANSPORTATION
Caltrans

LAST REVISION | DATE PLOTTED => $DATE
00-00-00 | TIME PLOTTED => $TIME

BORDER LAST REVISED 7/2/2010 | USERNAME => $USER | DGN FILE => $REQUEST | RELATIVE BORDER SCALE IS IN INCHES 0 1 2 3 | UNIT 0000 | PROJECT NUMBER & PHASE 0313000246

FOR ACCURATE RIGHT OF WAY AND ACCESS DATA, CONTACT RIGHT OF WAY ENGINEERING AT THE DISTRICT OFFICE.

PROJECT NOTES:

35 EXISTING TYPE III-AF SERVICE EQUIPMENT ENCLOSURE TO REMAIN. SEE SERVICE WIRING DIAGRAM 'C' ON SHEET E-15.

36 EXISTING CONDUCTORS AND CABLES TO REMAIN.

38 ABANDON ALL LOOPS WITHIN LANES.

39 Exist CONDUIT TO REMAIN. SEE SHEET E-2 AND E-3 FOR CONDUCTORS.

42 EXISTING CONTROLLER TO REMAIN. REASSIGN SIGNAL PHASES PER THE PROPOSED PHASE DIAGRAM ON THIS SHEET. REASSIGN DETECTOR LOOPS TO DETECTOR SLOTS AS INDICATED.

51 INSTALL Exist ROADWAY 1 LED LUMINAIRE FROM REMOVED STANDARD (SEE SHEET E-4).

60 RC Exist PULL BOX. INSTALL TRAFFIC WELDED PULL BOX IN PLACE.

77 NOT A PART OF THIS BID ITEM. SEE MODIFY SIGNAL AND LIGHTING PLANS.

87 VIDEO DETECTION ZONE. EXACT SIZE AND LOCATION TO BE DETERMINED BY THE ENGINEER IN THE FIELD.

108 INSTALL VIDEO DETECTION CAMERA ON Exist SIGNAL MAST ARM. SEE INSTALLATION DETAILS ON SHEET E-31.

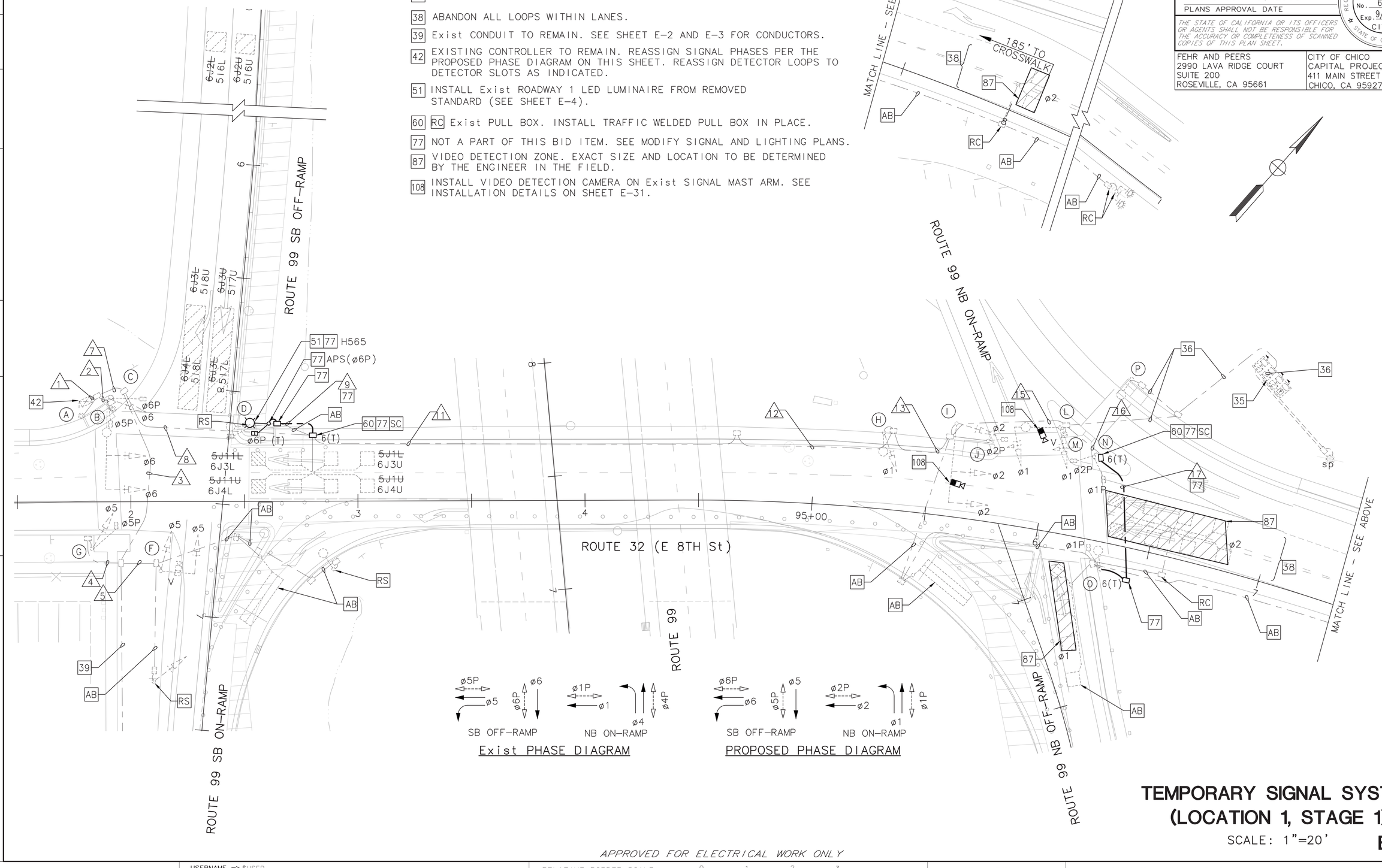

Dist	COUNTY	ROUTE	POST MILES TOTAL PROJECT	SHEET No.	TOTAL SHEETS
03	But	32	10.1/10.5	100	126

Kristin D. Calia 11/6/15
REGISTERED CIVIL ENGINEER DATE

November 13, 2015
PLANS APPROVAL DATE

REGISTERED PROFESSIONAL ENGINEER — K. CALIA No. 62461 Exp. 9/30/17 CIVIL — STATE OF CALIFORNIA

THE STATE OF CALIFORNIA OR ITS OFFICERS OR AGENTS SHALL NOT BE RESPONSIBLE FOR THE ACCURACY OR COMPLETENESS OF SCANNED COPIES OF THIS PLAN SHEET.

FEHR AND PEERS
2990 LAVA RIDGE COURT
SUITE 200
ROSEVILLE, CA 95661

CITY OF CHICO
CAPITAL PROJECT SERVICES
411 MAIN STREET
CHICO, CA 95927

TEMPORARY SIGNAL SYSTEM (LOCATION 1, STAGE 1)

SCALE: 1"=20'

E-19

APPROVED FOR ELECTRICAL WORK ONLY

STATE OF CALIFORNIA - DEPARTMENT OF TRANSPORTATION
CONSULTANT FUNCTIONAL SUPERVISOR: KRISTIN D. CALIA
CALCULATED-DESIGNED BY: M. JOHNSTONE
CHECKED BY: K. CALIA
REVISED BY | DATE REVISED

LAST REVISION: DATE PLOTTED => $DATE; TIME PLOTTED => $TIME
00-00-00

BORDER LAST REVISED 7/2/2010 | USERNAME => $USER; DGN FILE => $REQUEST | RELATIVE BORDER SCALE IS IN INCHES 0 1 2 3 | UNIT 0000 | PROJECT NUMBER & PHASE 0313000246

FOR ACCURATE RIGHT OF WAY AND ACCESS DATA, CONTACT
RIGHT OF WAY ENGINEERING AT THE DISTRICT OFFICE.

Dist	COUNTY	ROUTE	POST MILES TOTAL PROJECT	SHEET No.	TOTAL SHEETS
03	But	32	10.1/10.5	101	126

Kristin D. Calia 11/6/15
REGISTERED CIVIL ENGINEER DATE

November 13, 2015
PLANS APPROVAL DATE

REGISTERED PROFESSIONAL ENGINEER
K. CALIA
No. 62461
Exp. 9/30/17
CIVIL
STATE OF CALIFORNIA

THE STATE OF CALIFORNIA OR ITS OFFICERS OR AGENTS SHALL NOT BE RESPONSIBLE FOR THE ACCURACY OR COMPLETENESS OF SCANNED COPIES OF THIS PLAN SHEET.

FEHR AND PEERS
2990 LAVA RIDGE COURT
SUITE 200
ROSEVILLE, CA 95661

CITY OF CHICO
CAPITAL PROJECT SERVICES
411 MAIN STREET
CHICO, CA 95927

STAGE 1 CONDUCTOR SCHEDULE

CONDUCTOR DESIGNATION			NUMBER OF CONDUCTORS													
CABLE TYPE	STD	PHASE	RUN NUMBER													
			1	2	3	4	5	7	8	9	11	12	13	15	16	17
12CSC VEH-PED	Ⓒ	6,5P,6P	(1)	(1)												
9CSC VEH-PED APS	Ⓓ	5	~~1~~					~~1~~	~~1~~							
	Ⓕ	5	(1)		(1)		(1)	(1)								
	Ⓖ	5,5P	(1)		(1)	(1)		(1)								
	Ⓗ	1	(1)					(1)	(1)		(1)	(1)				
	Ⓘ	2	(1)					(1)	(1)		(1)	(1)	(1)			
	Ⓙ	2P	(1)					(1)	(1)		(1)	(1)	(1)			
	Ⓛ	1	(1)					(1)	(1)		(1)	(1)	(1)	(1)		
	Ⓝ	1P,2P	(1)					(1)	(1)		(1)	(1)	(1)	(1)	(1)	
	Ⓞ	1P	~~1~~					~~1~~	~~1~~		~~1~~	~~1~~	~~1~~	~~1~~	~~1~~	
		TOTAL 9CSC	(7)	–	(2)	(1)	(1)	(7)	(5)	–	(5)	(5)	(4)	(2)	(1)	–
3CSC PPB	Ⓐ	6P	(1)													
	Ⓑ	5P	(1)	(1)												
	Ⓓ	6P	~~1~~					~~1~~	~~1~~							
	Ⓖ	5P	(1)		(1)	(1)		(1)								
	Ⓙ	2P	(1)					(1)	(1)		(1)	(1)	(1)			
	Ⓜ	2P	(1)					(1)	(1)		(1)	(1)	(1)	(1)		
	Ⓝ	1P	(1)					(1)	(1)		(1)	(1)	(1)	(1)	(1)	
	Ⓞ	1P	~~1~~					~~1~~	~~1~~		~~1~~	~~1~~	~~1~~	~~1~~	~~1~~	
		TOTAL 3CSC	(6)	(1)	(1)	(1)	–	(4)	(3)	–	(3)	(3)	(3)	(2)	(1)	–
#14		ø1 PED	2					2	2		2	2	2	2	2	2
		ø1 PPB	2					2	2		2	2	2	2	2	2
		ø6 PED	2					2	2	2						
		ø6 PPB	2					2	2	2						
		TOTAL #14	8					8	8	4	4	4	4	4	4	4
#8		LIGHTING		(2)				(2)	(2)	2	(2)	(2)	(2)	(2)	(2)	2
		FLASHING BEACON												~~2~~		
		SIGNAL COMMON	1					1	1	1	1	1	1	1	1	1
		TOTAL #8	1	(2)				(2) 1	(2) 1	3	(2) 1	(2) 1	(2) 1	(2) 1	(2) 1	3
#4		CONTROLLER POWER	(2)					(2)	(2)		(2)	(2)	(2)	(2)		
TYPE B DLC		ø1	~~3~~					~~3~~	~~3~~		~~3~~	~~3~~	~~3~~			
		ø2	~~6~~					~~6~~	~~6~~		~~6~~	~~6~~	~~6~~			
		ø5														
		ø6	(4)					(4)	(4)							
		TOTAL DLCs PER RUN	(4)	–	–	–	–	(4)	(4)	–	–	–	–	–	–	–
SIC			(1)		(1)			(1)								
DETECTION CAMERA COAX/PWR			(1)+2		(1)		(1)	(1)+2	2		2	2	2	1		
CONDUIT SIZE			2–3"	2–4"	4"	1½"	2"	2–4"	2–4"	2"	4"	4"	4"	3"	2"	3"
NEW/EXISTING			E	E	E	E	E	E	E	N	E	E	E	E	E	N

(1) = DENOTES EXISTING CONDUCTORS TO REMAIN
~~1~~ = DENOTES EXISTING CONDUCTORS TO BE REMOVED

NOTE: PHASE NUMBERS OF EXISTING CONDUCTORS ARE PER THE PROPOSED PHASING SHOWN ON E-19.

STAGE 1 POLE AND EQUIPMENT SCHEDULE

	STANDARD			VEH SIG MTG				PED SIGNAL MOUNTING		APS		LED LUM	SPECIAL REQUIREMENTS
No.	TYPE	SMA	LMA	ø	MAST ARM	ø	POLE	ø	MOUNTING	ø	ARROW		
Ⓐ	(PPB POST)	–	–	–	–	–	–	–	–	6	(→)	–	EXISTING POLE TO REMAIN.
Ⓑ	(PPB POST)	–	–	–	–	–	–	–	–	5	(←)	–	EXISTING POLE TO REMAIN.
Ⓒ	(26A–3–70)	(40')	(15')	6 6	(MAS) (MAS)	6	(SV–1–T)	6 5	(SP–1–CS) (SP–1–CS)	– –	– –	(ROADWAY 1)	EXISTING POLE TO REMAIN.
Ⓓ	ULTIMATE 15TS	–	12'	–	–	–	–	6	SP–1–T	6	←	ROADWAY 1	INSTALL ULTIMATE POLE DURING STAGE CONSTRUCTION. REFER TO SHEET E–2.
Ⓕ	(16–1–70)	(15')	–	5	(MAS)	5	(SV–1–T)	–	–	–	–	–	EXISTING POLE TO REMAIN.
Ⓖ	(1–B)	–	–	–	–	5	(TV–1–T)	5	(SP–1–CS)	5	(→)	–	EXISTING POLE TO REMAIN.
Ⓗ	(15TS)	–	(12')	–	–	1	(SV–1–T)	–	–	–	–	(ROADWAY 1)	EXISTING POLE TO REMAIN.
Ⓘ	(23–3–70)	(35')	–	2 2	(MAS) (MAS)	2	(SV–1–T)	–	–	–	–	–	EXISTING POLE TO REMAIN. INSTALL VIDEO DETECTION CAMERA ON SMA.
Ⓙ	(1–B)	–	–	–	–	–	–	2	(TP–1–T)	2	(→)	–	EXISTING POLE TO REMAIN.
Ⓛ	(17–3–100)	(20')	(12')	1	(MAS–4B)	1	(SV–1–T)	–	–	–	–	(ROADWAY 1)	EXISTING POLE TO REMAIN. INSTALL VIDEO DETECTION CAMERA ON SMA.
Ⓜ	(PPB POST)	–	–	–	–	–	–	–	–	2	(←)	–	EXISTING POLE TO REMAIN.
Ⓝ	(1–B)	–	–	–	–	–	–	2 1	(TP–2–T)	1	(→)	–	EXISTING POLE TO REMAIN.
Ⓞ	(15TS)	–	(12')	–	–	–	–	1	(SP–1–T)	1	(→)	(ROADWAY 1)	EXISTING POLE TO REMAIN.
Ⓟ	(15)	–	(12')	–	–	–	–	–	–	–	–	(ROADWAY 1)	EXISTING POLE TO REMAIN.

( ) = DENOTES EXISTING

TEMPORARY SIGNAL SYSTEM (LOCATION 1, STAGE 1)

NO SCALE **E-20**

APPROVED FOR ELECTRICAL WORK ONLY

STATE OF CALIFORNIA – DEPARTMENT OF TRANSPORTATION
Caltrans
CONSULTANT FUNCTIONAL SUPERVISOR: KRISTIN D. CALIA
CALCULATED-DESIGNED BY: M. JOHNSTONE
CHECKED BY: K. CALIA
REVISED BY
DATE REVISED

LAST REVISION: DATE PLOTTED => $DATE
00-00-00 TIME PLOTTED => $TIME

BORDER LAST REVISED 7/2/2010 | USERNAME => $USER | DGN FILE => $REQUEST | RELATIVE BORDER SCALE IS IN INCHES 0 1 2 3 | UNIT 0000 | PROJECT NUMBER & PHASE 0313000246

FOR ACCURATE RIGHT OF WAY AND ACCESS DATA, CONTACT RIGHT OF WAY ENGINEERING AT THE DISTRICT OFFICE.

PROJECT NOTES:

19 2"C, MT.

24 Exist CONDUIT TO REMAIN. SEE SHEET E-5 AND E-6 FOR CONDUCTORS.

32 COIL 7 DLC FOR LOOPS TO BE INSTALLED IN STAGE 2.

36 EXISTING CONDUCTORS AND CABLES TO REMAIN.

38 ABANDON ALL LOOPS WITHIN LANES.

77 NOT A PART OF THIS BID ITEM. SEE MODIFY SIGNAL AND LIGHTING PLANS.

87 VIDEO DETECTION ZONE. EXACT SIZE AND LOCATION TO BE DETERMINED BY THE ENGINEER IN THE FIELD.

108 INSTALL VIDEO DETECTION CAMERA ON Exist SIGNAL MAST ARM. SEE INSTALLATION DETAILS ON SHEET E-31.

Dist	COUNTY	ROUTE	POST MILES TOTAL PROJECT	SHEET No.	TOTAL SHEETS
03	But	32	10.1/10.5	102	126

Kristin D. Calia 11/6/15
REGISTERED CIVIL ENGINEER DATE

November 13, 2015
PLANS APPROVAL DATE

REGISTERED PROFESSIONAL ENGINEER — K. CALIA No. 62461 Exp. 9/30/17 CIVIL — STATE OF CALIFORNIA

THE STATE OF CALIFORNIA OR ITS OFFICERS OR AGENTS SHALL NOT BE RESPONSIBLE FOR THE ACCURACY OR COMPLETENESS OF SCANNED COPIES OF THIS PLAN SHEET.

FEHR AND PEERS
2990 LAVA RIDGE COURT
SUITE 200
ROSEVILLE, CA 95661

CITY OF CHICO
CAPITAL PROJECT SERVICES
411 MAIN STREET
CHICO, CA 95927

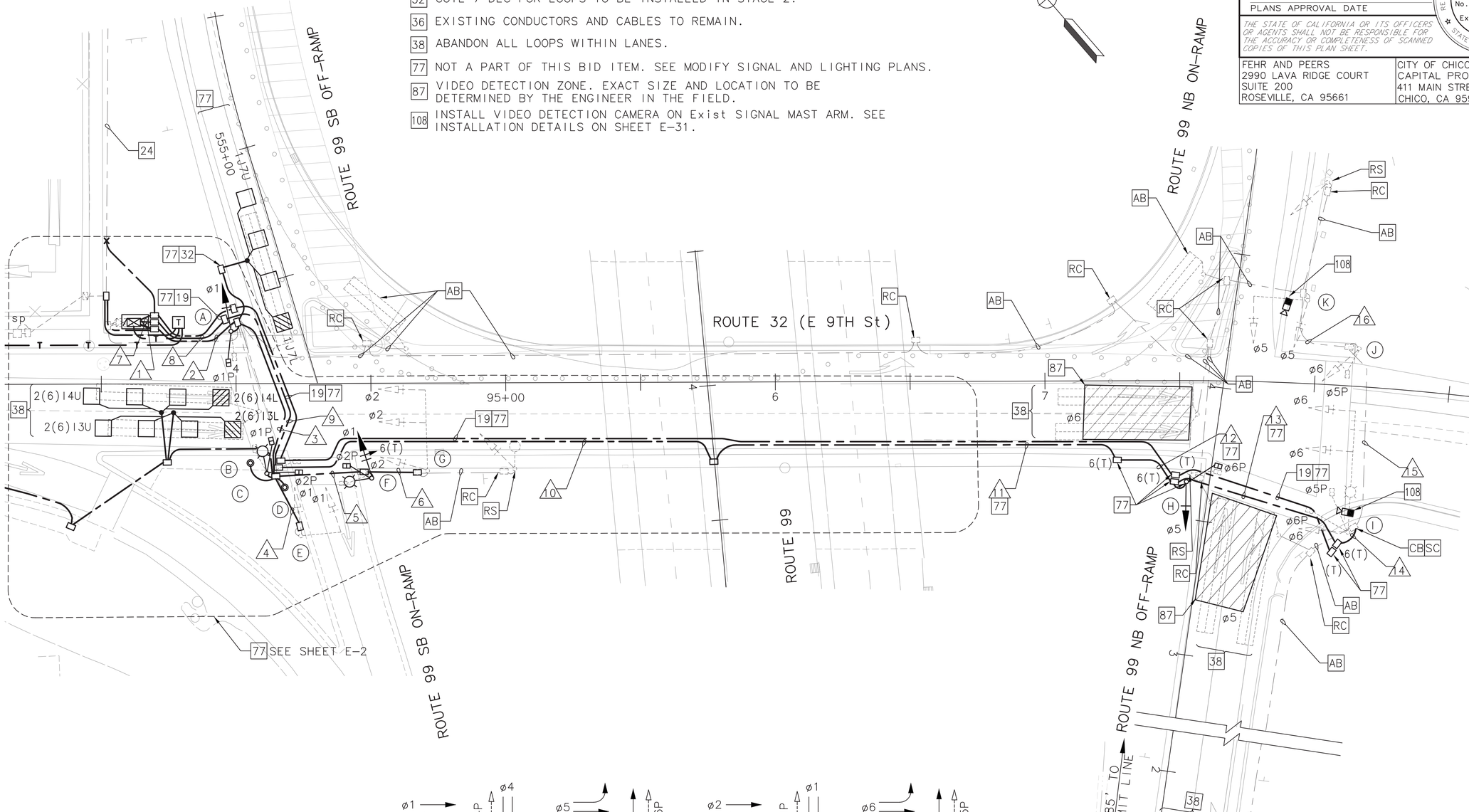

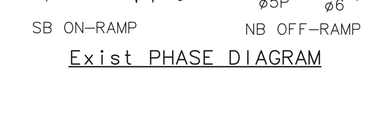

Exist PHASE DIAGRAM

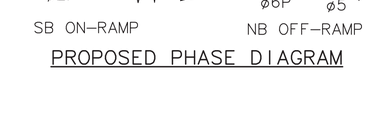

PROPOSED PHASE DIAGRAM

TEMPORARY SIGNAL SYSTEM (LOCATION 2, STAGE 1)

SCALE: 1"=20'

E-21

APPROVED FOR ELECTRICAL WORK ONLY

STATE OF CALIFORNIA - DEPARTMENT OF TRANSPORTATION
Caltrans
CONSULTANT FUNCTIONAL SUPERVISOR: KRISTIN D. CALIA
CALCULATED-DESIGNED BY: M. JOHNSTONE
CHECKED BY: K. CALIA
REVISED BY
DATE REVISED

LAST REVISION DATE PLOTTED => $DATE
00-00-00 TIME PLOTTED => $TIME

BORDER LAST REVISED 7/2/2010
USERNAME => $USER
DGN FILE => $REQUEST
RELATIVE BORDER SCALE IS IN INCHES 0 1 2 3
UNIT 0000
PROJECT NUMBER & PHASE 0313000246

FOR ACCURATE RIGHT OF WAY AND ACCESS DATA, CONTACT
RIGHT OF WAY ENGINEERING AT THE DISTRICT OFFICE.

Dist	COUNTY	ROUTE	POST MILES TOTAL PROJECT	SHEET No.	TOTAL SHEETS
03	But	32	10.1/10.5	103	126

Kristin D. Calia 11/6/15
REGISTERED CIVIL ENGINEER DATE

November 13, 2015
PLANS APPROVAL DATE

REGISTERED PROFESSIONAL ENGINEER
K. CALIA
No. 62461
Exp. 9/30/17
CIVIL
STATE OF CALIFORNIA

THE STATE OF CALIFORNIA OR ITS OFFICERS OR AGENTS SHALL NOT BE RESPONSIBLE FOR THE ACCURACY OR COMPLETENESS OF SCANNED COPIES OF THIS PLAN SHEET.

FEHR AND PEERS
2990 LAVA RIDGE COURT
SUITE 200
ROSEVILLE, CA 95661

CITY OF CHICO
CAPITAL PROJECT SERVICES
411 MAIN STREET
CHICO, CA 95927

STAGE 1 CONDUCTOR SCHEDULE

CONDUCTOR DESIGNATION			NUMBER OF CONDUCTORS															
CABLE TYPE	STD	PHASE	RUN NUMBER															
			1	2	3	4	5	6	7	8	9	10	11	12	13	14	15	16
9CSC VEH–PED	Ⓐ	1,1P / 1P	1 / 1	1 / 1														
	Ⓑ	1P	1	1	1													
	Ⓒ	1P,2P	1	1	1													
	Ⓓ	2P	1	1	1													
	Ⓕ	1,2P / 2P	1 / 1	1 / 1	1 / 1		1 / 1											
	Ⓖ	2	1	1	1		1	1										
3CSC PPB	Ⓗ	5,6P / 6P							1 / 1	1 / 1	1 / 1	1 / 1	1 / 1	1 / 1	1 / 1			
		TOTAL 9/3 CSC	4 / 4	4 / 4	3 / 3	– / –	2 / 1	1 / –	1 / 1	1 / 1	1 / 1	1 / 1	1 / 1	1 / 1	– / –	– / –	– / –	– / –
5CSC VEH	Ⓔ	ø1	1	1	1	1												
#14		ø5 VEH							3	3	3	3	3	3	3	3		
		ø5 PED							2	2	2	2	2	2	2	2	(2)	~~2~~
		ø5 PPB							1	1	1	1	1	1	1	1	(1)	~~1~~
		ø6 VEH							3	3	3	3	3	3	3	3		
		ø6 PED							2	2	2	2	2	2	2	2	~~2~~	~~2~~
		ø6 PPB							1	1	1	1	1	1	1	1	~~1~~	~~1~~
		PPB COMMON							1	1	1	1	1	1	1	1	(1)	~~1~~
		TOTAL #14							13	13	13	13	13	13	13	13	(4)	–
#10		LIGHTING															~~2~~	~~2~~
#8		ø5 VEH															(3)	(3)
		ø6 VEH															(3)	~~3~~
		SIGNAL COMMON							1	1	1	1	1	1	1	1		
		SPARES																(3)
		LIGHTING	2	2	2		2		2	2	2	2	2	2	2	2		
		TOTAL #8	2	2	2		2		3	3	3	3	3	3	3	3	(6)	(6)
#6		SIGNAL COMMON															(1)	(1)
		CONTROLLER POWER	2															
		TOTAL #6	2														(1)	(1)
TYPE B DLC	ø1		9	9														
	ø2		6	6	6													
	ø5																~~3~~	~~3~~
	ø6																	
		TOTAL DLCs PER RUN	15	15	6	–	–	–	–	–	–	–	–	–	–	–	–	–
VIDEO DETECTION COAX AND PWR									2	2	2	2	2	2	2	2	1	1
CONDUIT SIZE			2–3"	2–3"	2–3"	3"	3"	3"	4"	2–3"	2–3"	2–3"	2–3"	2–3"	2–3"	3"	2"	2"
NEW/EXISTING			N	N	N	N	N	N	N	N	N	N	N	N	N	N	E	E

(1) = DENOTES EXISTING CONDUCTORS TO REMAIN
~~1~~ = DENOTES EXISTING CONDUCTORS TO BE REMOVED

NOTE: PHASE NUMBERS OF EXISTING CONDUCTORS ARE PER THE PROPOSED PHASING SHOWN ON E–19.

STAGE 1 POLE AND EQUIPMENT SCHEDULE

	STANDARD			VEH SIG MTG				PED SIGNAL MOUNTING		APS		LED LUM	SPECIAL REQUIREMENTS
No.	TYPE	SMA	LMA	ø	MAST ARM	ø	POLE	ø	MOUNTING	ø	ARROW		
Ⓐ	ULTIMATE 1–B	–	–	–	–	1	TV–1–T	1	SP–1–T	1	→	–	INSTALL ULTIMATE POLE DURING STAGE CONSTRUCTION. REFER TO SHEET E–5.
Ⓑ	ULTIMATE PPB POST	–	–	–	–	–	–	–	–	1	→	–	INSTALL ULTIMATE POLE DURING STAGE CONSTRUCTION. REFER TO SHEET E–5.
Ⓒ	ULTIMATE 15TS	–	12'	–	–	–	–	2 1	SP–2–T	–	–	ROADWAY 1	INSTALL ULTIMATE POLE DURING STAGE CONSTRUCTION. REFER TO SHEET E–5.
Ⓓ	ULTIMATE PPB POST	–	–	–	–	–	–	–	–	2	←	–	INSTALL ULTIMATE POLE DURING STAGE CONSTRUCTION. REFER TO SHEET E–5.
Ⓔ	(16–1–70)	(15')	–	1	(MAS)	1	(SV–1–T)	–	–	–	–	–	EXISTING POLE TO REMAIN.
Ⓕ	ULTIMATE 15TS	–	12'	–	–	1	SV–1–T	2	SP–1–T	2	→	ROADWAY 1	INSTALL ULTIMATE POLE DURING STAGE CONSTRUCTION. REFER TO SHEET E–5.
Ⓖ	(18–3–70)	(30')	–	2 2	(MAT) (MAT)	2	(SV–1–T)	–	–	–	–	–	EXISTING POLE TO REMAIN.
Ⓗ	ULTIMATE 1–B	–	–	–	–	5	TV–1–T	6	SP–1–T	6	←	–	INSTALL ULTIMATE POLE DURING STAGE CONSTRUCTION. REFER TO SHEET E–5.
Ⓘ	(26A–3–70)	(45')	(15')	6 6	(MAS) (MAS)	6	(SV–1–T)	5 6	(SP–1–CS) (SP–1–CS)	5 6	(→) (←)	–	EXISTING POLE TO REMAIN. INSTALL VIDEO DETECTION CAMERA ON SMA.
Ⓙ	(1–B)	–	–	–	–	6	(TV–1–T)	5	(SP–1–CS)	5	(→)	–	EXISTING POLE TO REMAIN.
Ⓚ	(16–2–70)	(20')	–	5	(MAS)	5	(SV–1–T)	–	–	–	–	–	EXISTING POLE TO REMAIN. INSTALL VIDEO DETECTION CAMERA ON SMA.

( ) = DENOTES EXISTING

TEMPORARY SIGNAL SYSTEM (LOCATION 2, STAGE 1)

NO SCALE **E–22**

APPROVED FOR ELECTRICAL WORK ONLY

REVISED BY | DATE REVISED
M. JOHNSTONE | K. CALIA
CALCULATED–DESIGNED BY | CHECKED BY
CONSULTANT FUNCTIONAL SUPERVISOR
KRISTIN D. CALIA
STATE OF CALIFORNIA – DEPARTMENT OF TRANSPORTATION
Caltrans

LAST REVISION | DATE PLOTTED => $DATE
00–00–00 | TIME PLOTTED => $TIME

BORDER LAST REVISED 7/2/2010 | USERNAME => $USER | DGN FILE => $REQUEST | RELATIVE BORDER SCALE IS IN INCHES 0 1 2 3 | UNIT 0000 | PROJECT NUMBER & PHASE 0313000246

FOR ACCURATE RIGHT OF WAY AND ACCESS DATA, CONTACT RIGHT OF WAY ENGINEERING AT THE DISTRICT OFFICE.

PROJECT NOTES:

35 EXISTING TYPE III-AF SERVICE EQUIPMENT ENCLOSURE TO REMAIN. SEE SERVICE WIRING DIAGRAM 'C' ON SHEET E-15.

36 EXISTING CONDUCTORS AND CABLES TO REMAIN.

38 ABANDON ALL LOOPS WITHIN LANES.

39 Exist CONDUIT TO REMAIN. SEE SHEET E-2 AND E-3 FOR CONDUCTORS.

75 INSTALL LEFT TURN SIGNAL WITH RED BALL PER DETAIL ON SHEET E-18.

77 NOT A PART OF THIS BID ITEM. SEE MODIFY SIGNAL AND LIGHTING PLANS.

87 VIDEO DETECTION ZONE. EXACT SIZE AND LOCATION TO BE DETERMINED BY THE ENGINEER IN THE FIELD.

108 INSTALL VIDEO DETECTION CAMERA ON Exist SIGNAL MAST ARM. SEE INSTALLATION DETAILS ON SHEET E-31.

111 INSTALL TEMPORARY WOOD POLE (40') WITH 200 W HPS LUMINAIRE. SEE DETAILS ON SHEETS E-27 THRU E-32. RC AFTER FINAL STAGE CONSTRUCTION.

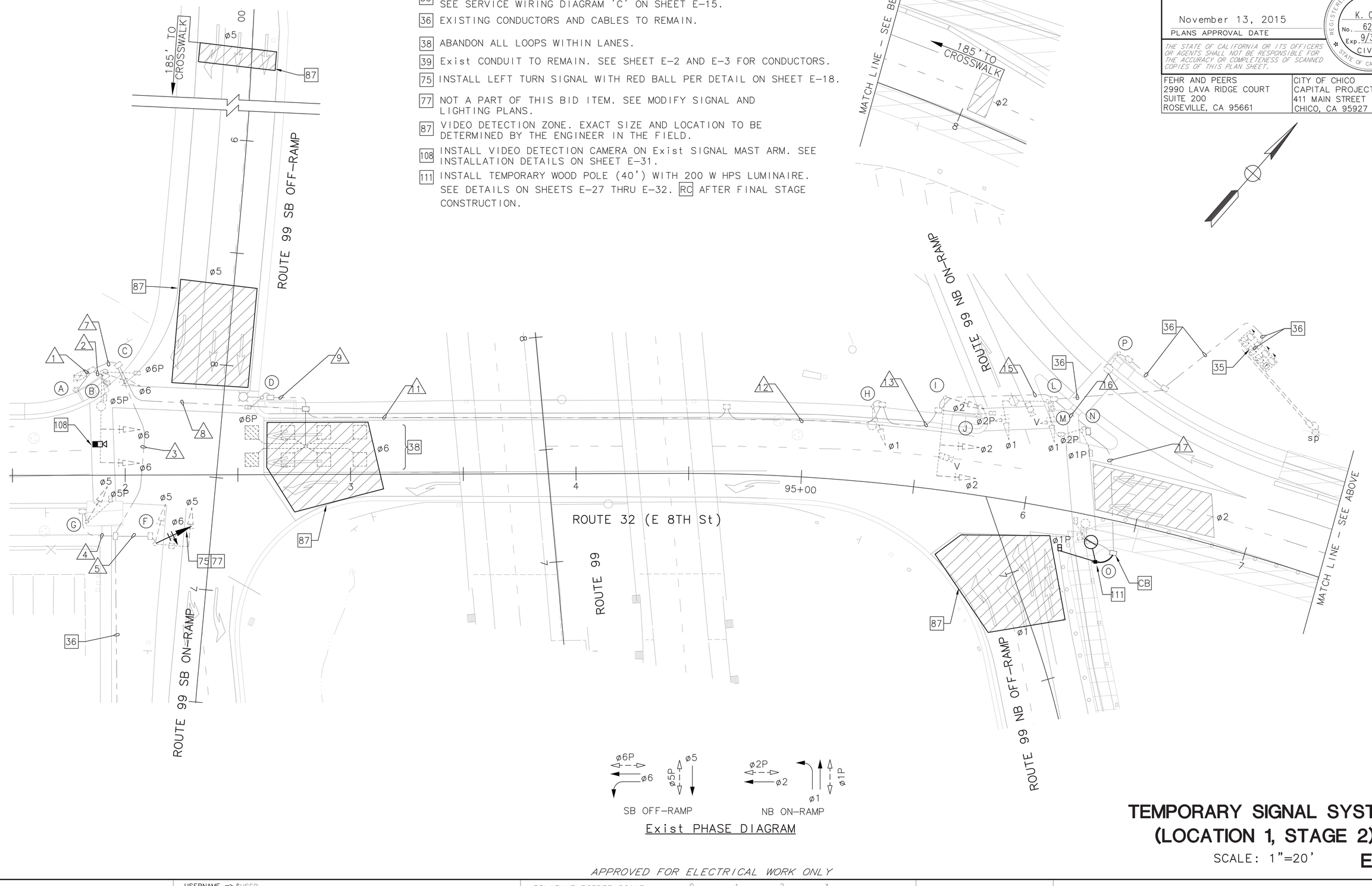

Exist PHASE DIAGRAM

Dist	COUNTY	ROUTE	POST MILES TOTAL PROJECT	SHEET No.	TOTAL SHEETS
03	But	32	10.1/10.5	104	126

Kristin D. Calia 11/6/15
REGISTERED CIVIL ENGINEER DATE

November 13, 2015
PLANS APPROVAL DATE

K. CALIA No. 62461 Exp. 9/30/17 CIVIL — REGISTERED PROFESSIONAL ENGINEER — STATE OF CALIFORNIA

THE STATE OF CALIFORNIA OR ITS OFFICERS OR AGENTS SHALL NOT BE RESPONSIBLE FOR THE ACCURACY OR COMPLETENESS OF SCANNED COPIES OF THIS PLAN SHEET.

FEHR AND PEERS
2990 LAVA RIDGE COURT
SUITE 200
ROSEVILLE, CA 95661

CITY OF CHICO
CAPITAL PROJECT SERVICES
411 MAIN STREET
CHICO, CA 95927

TEMPORARY SIGNAL SYSTEM (LOCATION 1, STAGE 2)

SCALE: 1"=20' **E-23**

APPROVED FOR ELECTRICAL WORK ONLY

STATE OF CALIFORNIA - DEPARTMENT OF TRANSPORTATION
CONSULTANT FUNCTIONAL SUPERVISOR: KRISTIN D. CALIA
CHECKED BY: K. CALIA
CALCULATED-DESIGNED BY: M. JOHNSTONE
REVISED BY / DATE REVISED

LAST REVISION 00-00-00 DATE PLOTTED => $DATE TIME PLOTTED => $TIME

BORDER LAST REVISED 7/2/2010 | USERNAME => $USER DGN FILE => $REQUEST | RELATIVE BORDER SCALE IS IN INCHES 0 1 2 3 | UNIT 0000 | PROJECT NUMBER & PHASE 0313000246

FOR ACCURATE RIGHT OF WAY AND ACCESS DATA, CONTACT
RIGHT OF WAY ENGINEERING AT THE DISTRICT OFFICE.

Dist	COUNTY	ROUTE	POST MILES TOTAL PROJECT	SHEET No.	TOTAL SHEETS
03	But	32	10.1/10.5	105	126

Kristin D. Calia 11/6/15
REGISTERED CIVIL ENGINEER DATE

November 13, 2015
PLANS APPROVAL DATE

REGISTERED PROFESSIONAL ENGINEER
K. CALIA
No. 62461
Exp. 9/30/17
CIVIL
STATE OF CALIFORNIA

THE STATE OF CALIFORNIA OR ITS OFFICERS OR AGENTS SHALL NOT BE RESPONSIBLE FOR THE ACCURACY OR COMPLETENESS OF SCANNED COPIES OF THIS PLAN SHEET.

FEHR AND PEERS
2990 LAVA RIDGE COURT
SUITE 200
ROSEVILLE, CA 95661

CITY OF CHICO
CAPITAL PROJECT SERVICES
411 MAIN STREET
CHICO, CA 95927

STAGE 2 CONDUCTOR SCHEDULE

CONDUCTOR DESIGNATION			NUMBER OF CONDUCTORS													
CABLE TYPE	STD	PHASE	RUN NUMBER													
			1	2	3	4	5	7	8	9	11	12	13	15	16	17
12CSC VEH-PED	Ⓒ	6,5P,6P	(1)	(1)												
9CSC VEH-PED APS	Ⓓ	5														
	Ⓕ	5,6	(1)		(1)		(1)	(1)								
	Ⓖ	5,5P	(1)		(1)	(1)		(1)								
	Ⓗ	1	(1)					(1)	(1)		(1)	(1)				
	Ⓘ	2	(1)					(1)	(1)		(1)	(1)	(1)			
	Ⓙ	2P	(1)					(1)	(1)		(1)	(1)	(1)			
	Ⓛ	1	(1)					(1)	(1)		(1)	(1)	(1)	(1)		
	Ⓝ	1P,2P	(1)					(1)	(1)		(1)	(1)	(1)	(1)	(1)	
	Ⓞ	1P														
		TOTAL 9CSC	(7)	–	(2)	(1)	(1)	(7)	(5)	–	(5)	(5)	(4)	(2)	(1)	–
3CSC PPB	Ⓐ	6P	(1)													
	Ⓑ	5P	(1)	(1)												
	Ⓓ	6P														
	Ⓖ	5P	(1)		(1)	(1)		(1)								
	Ⓙ	2P	(1)					(1)	(1)		(1)	(1)	(1)			
	Ⓜ	2P	(1)					(1)	(1)		(1)	(1)	(1)	(1)		
	Ⓝ	1P	(1)					(1)	(1)		(1)	(1)	(1)	(1)	(1)	
	Ⓞ	1P														
		TOTAL 3CSC	(6)	(1)	(1)	(1)	–	(4)	(3)	–	(3)	(3)	(3)	(2)	(1)	–
#14		ø1 PED	(2)					(2)	(2)		(2)	(2)	(2)	(2)	(2)	(2)
		ø1 PPB	(2)					(2)	(2)		(2)	(2)	(2)	(2)	(2)	(2)
		ø6 PED	(2)					(2)	(2)	(2)						
		ø6 PPB	(2)					(2)	(2)	(2)						
		TOTAL #14	(8)					(8)	(8)	(4)	(4)	(4)	(4)	(4)	(4)	(4)
#8		LIGHTING		(2)				(2)	(2)	(2)	(2)	(2)	(2)	(2)	(2)	(2)
		FLASHING BEACON														
		SIGNAL COMMON	(1)					(1)	(1)	(1)	(1)	(1)	(1)	(1)	(1)	(1)
		TOTAL #8	(1)	(2)				(3)	(3)	(3)	(3)	(3)	(3)	(3)	(3)	(3)
#4		CONTROLLER POWER	(2)					(2)	(2)		(2)	(2)	(2)	(2)		
TYPE B DLC		ø1														
		ø2														
		ø5														
		ø6	~~4~~					~~4~~	~~4~~							
		TOTAL DLCs PER RUN	–	–	–	–	–	–	–	–	–	–	–	–	–	–
SIC			(1)		(1)			(1)								
DETECTION CAMERA COAX/PWR			(3)+1	1	(1)		(1)	(3)	(2)		(2)	(2)	(2)	(1)		
CONDUIT SIZE			2–3"	2–4"	4"	1½"	2"	2–4"	2–4"	2"	4"	4"	4"	3"	2"	3"
NEW/EXISTING			E	E	E	E	E	E	E	E	E	E	E	E	E	E

(1) = DENOTES EXISTING CONDUCTORS TO REMAIN
~~4~~ = DENOTES EXISTING CONDUCTORS TO BE REMOVED

STAGE 2 POLE AND EQUIPMENT SCHEDULE

	STANDARD			VEH SIG MTG				PED SIGNAL MOUNTING		APS		LED LUM	SPECIAL REQUIREMENTS
No.	TYPE	SMA	LMA	ø	MAST ARM	ø	POLE	ø	MOUNTING	ø	ARROW		
Ⓐ	(PPB POST)	–	–	–	–	–	–	–	–	6	(→)	–	EXISTING POLE TO REMAIN.
Ⓑ	(PPB POST)	–	–	–	–	–	–	–	–	5	(←)	–	EXISTING POLE TO REMAIN.
Ⓒ	(26A–3–70)	(40')	(15')	6 6	(MAS) (MAS)	6	(SV–1–T)	6 5	(SP–1–CS) (SP–1–CS)	– –	– –	(ROADWAY 1)	EXISTING POLE TO REMAIN. INSTALL VIDEO DETECTION CAMERA ON SMA.
Ⓓ	(15TS)	–	(12')	–	–	–	–	6	(SP–1–T)	6	(←)	(ROADWAY 1)	ULTIMATE POLE TO REMAIN FROM STAGE 1. SEE SHEET E–2.
Ⓕ	(16–1–70)	(15')	–	5	(MAS)	5 6	~~(SV–1–T)~~ SV–2–TB	–	–	–	–	–	EXISTING POLE TO REMAIN.
Ⓖ	(1–B)	–	–	–	–	5	(TV–1–T)	5	(SP–1–CS)	5	(→)	–	EXISTING POLE TO REMAIN.
Ⓗ	(15TS)	–	(12')	–	–	1	(SV–1–T)	–	–	–	–	(ROADWAY 1)	EXISTING POLE TO REMAIN.
Ⓘ	(23–3–70)	(35')	–	2 2	(MAS) (MAS)	2	(SV–1–T)	–	–	–	–	–	EXISTING POLE TO REMAIN.
Ⓙ	(1–B)	–	–	–	–	–	–	2	(TP–1–T)	2	(→)	–	EXISTING POLE TO REMAIN.
Ⓛ	(17–3–100)	(20')	(12')	1	(MAS–4B)	1	(SV–1–T)	–	–	–	–	(ROADWAY 1)	EXISTING POLE TO REMAIN.
Ⓜ	(PPB POST)	–	–	–	–	–	–	–	–	2	(←)	–	EXISTING POLE TO REMAIN.
Ⓝ	(1–B)	–	–	–	–	–	–	2 1	(TP–2–T)	1	(→)	–	EXISTING POLE TO REMAIN.
Ⓞ	TEMPORARY WOOD POLE	–	12'	–	–	–	–	1	SP–1–T	1	→	ROADWAY 1	
Ⓟ	(15)	–	(12')	–	–	–	–	–	–	–	–	(ROADWAY 1)	EXISTING POLE TO REMAIN.

( ) = DENOTES EXISTING

TEMPORARY SIGNAL SYSTEM (LOCATION 1, STAGE 2)

NO SCALE **E-24**

APPROVED FOR ELECTRICAL WORK ONLY

REVISED BY | DATE REVISED
M. JOHNSTONE | K. CALIA
CALCULATED-DESIGNED BY | CHECKED BY
CONSULTANT FUNCTIONAL SUPERVISOR: KRISTIN D. CALIA
STATE OF CALIFORNIA – DEPARTMENT OF TRANSPORTATION
Caltrans

LAST REVISION | DATE PLOTTED => $DATE
00-00-00 | TIME PLOTTED => $TIME

BORDER LAST REVISED 7/2/2010 | USERNAME => $USER | DGN FILE => $REQUEST | RELATIVE BORDER SCALE IS IN INCHES 0 1 2 3 | UNIT 0000 | PROJECT NUMBER & PHASE 0313000246

FOR ACCURATE RIGHT OF WAY AND ACCESS DATA, CONTACT RIGHT OF WAY ENGINEERING AT THE DISTRICT OFFICE.

PROJECT NOTES:

36 EXISTING CONDUCTORS AND CABLES TO REMAIN.

38 ABANDON ALL LOOPS WITHIN LANES.

46 COVER ø6P PEDESTRIAN SIGNAL AND PPB DURING STAGE 2 CONSTRUCTION.

77 NOT A PART OF THIS BID ITEM. SEE MODIFY SIGNAL AND LIGHTING PLANS.

78 INSTALL TEMPORARY WOOD POLE (40'). SEE DETAILS ON SHEETS E-27 THRU E-32. RC AFTER FINAL STAGE CONSTRUCTION.

79 OVERHEAD MESSENGER WIRE. SEE DETAILS ON SHEETS E-27 THRU E-32.

86 INSTALL VIDEO DETECTION CAMERA ON TEMPORARY WOOD POLE. SEE INSTALLATION DETAIL ON SHEET E-30.

87 VIDEO DETECTION ZONE. EXACT SIZE AND LOCATION TO BE DETERMINED BY THE ENGINEER IN THE FIELD.

88 PROTECT EXISTING CONDUIT AND CONDUCTORS DURING CONSTRUCTION.

111 INSTALL TEMPORARY WOOD POLE (40') WITH 200 W HPS LUMINAIRE. SEE DETAILS ON SHEETS E-27 THRU E-32. RC AFTER FINAL STAGE CONSTRUCTION.

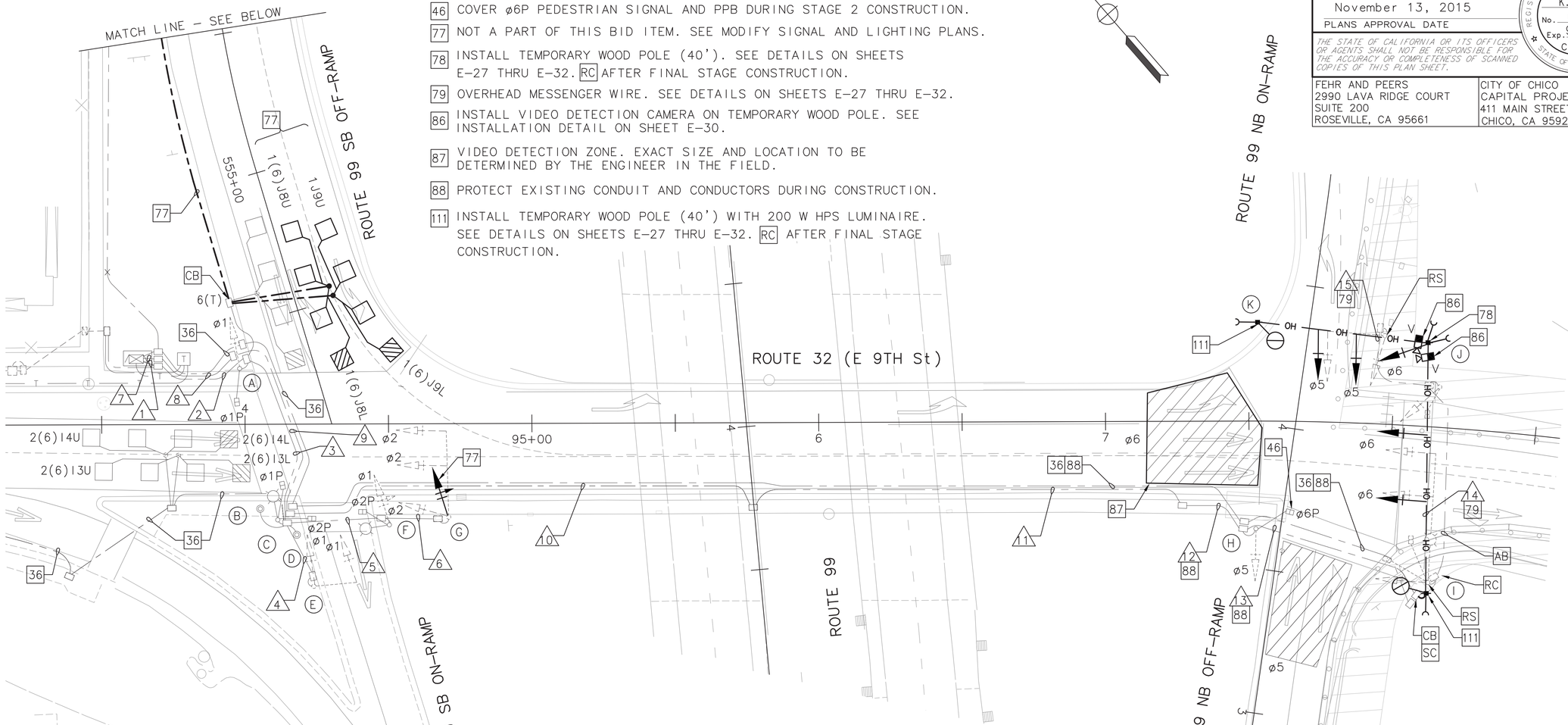

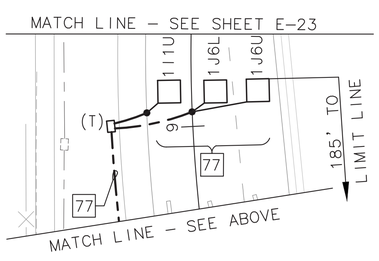

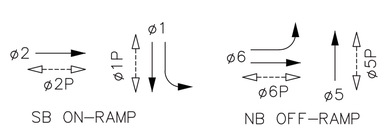

Exist PHASE DIAGRAM

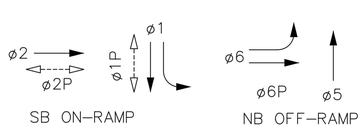

PROPOSED PHASE DIAGRAM

TEMPORARY SIGNAL SYSTEM (LOCATION 2, STAGE 2)

SCALE: 1"=20'

E-25

Dist	COUNTY	ROUTE	POST MILES TOTAL PROJECT	SHEET No.	TOTAL SHEETS
03	But	32	10.1/10.5	106	126

Kristin D. Calia 11/6/15
REGISTERED CIVIL ENGINEER DATE

November 13, 2015
PLANS APPROVAL DATE

REGISTERED PROFESSIONAL ENGINEER — K. CALIA No. 62461 Exp. 9/30/17 CIVIL — STATE OF CALIFORNIA

THE STATE OF CALIFORNIA OR ITS OFFICERS OR AGENTS SHALL NOT BE RESPONSIBLE FOR THE ACCURACY OR COMPLETENESS OF SCANNED COPIES OF THIS PLAN SHEET.

FEHR AND PEERS
2990 LAVA RIDGE COURT
SUITE 200
ROSEVILLE, CA 95661

CITY OF CHICO
CAPITAL PROJECT SERVICES
411 MAIN STREET
CHICO, CA 95927

REVISED BY	DATE REVISED
M. JOHNSTONE	K. CALIA

CALCULATED-DESIGNED BY
CHECKED BY
K. CALIA

STATE OF CALIFORNIA – DEPARTMENT OF TRANSPORTATION
CONSULTANT FUNCTIONAL SUPERVISOR
KRISTIN D. CALIA

APPROVED FOR ELECTRICAL WORK ONLY

LAST REVISION DATE PLOTTED => $DATE
00-00-00 TIME PLOTTED => $TIME

BORDER LAST REVISED 7/2/2010 | USERNAME => $USER | DGN FILE => $REQUEST | RELATIVE BORDER SCALE IS IN INCHES 0 1 2 3 | UNIT 0000 | PROJECT NUMBER & PHASE 0313000246

FOR ACCURATE RIGHT OF WAY AND ACCESS DATA, CONTACT
RIGHT OF WAY ENGINEERING AT THE DISTRICT OFFICE.

Dist	COUNTY	ROUTE	POST MILES TOTAL PROJECT	SHEET No.	TOTAL SHEETS
03	But	32	10.1/10.5	107	126

Kristin D. Calia 11/6/15
REGISTERED CIVIL ENGINEER DATE

November 13, 2015
PLANS APPROVAL DATE

REGISTERED PROFESSIONAL ENGINEER
K. CALIA
No. 62461
Exp. 9/30/17
CIVIL
STATE OF CALIFORNIA

THE STATE OF CALIFORNIA OR ITS OFFICERS OR AGENTS SHALL NOT BE RESPONSIBLE FOR THE ACCURACY OR COMPLETENESS OF SCANNED COPIES OF THIS PLAN SHEET.

FEHR AND PEERS
2990 LAVA RIDGE COURT
SUITE 200
ROSEVILLE, CA 95661

CITY OF CHICO
CAPITAL PROJECT SERVICES
411 MAIN STREET
CHICO, CA 95927

STAGE 2 CONDUCTOR SCHEDULE

CONDUCTOR DESIGNATION			NUMBER OF CONDUCTORS														
CABLE TYPE	STD	PHASE	RUN NUMBER 1	2	3	4	5	6	7	8	9	10	11	12	13	14	15
9CSC VEH–PED	Ⓐ	1,1P / 1P	(1) / (1)	(1) / (1)													
	Ⓑ	1P	(1)	(1)	(1)												
	Ⓒ	1P,2P	(1)	(1)	(1)												
	Ⓓ	2P	(1)	(1)	(1)												
	Ⓕ	1,2P / 2P	(1) / (1)	(1) / (1)	(1) / (1)		(1) / (1)										
	Ⓖ	2	(1)	(1)	(1)		(1)	(1)									
3CSC PPB	Ⓗ	5,6P / 6P							(1) / (1)	(1) / (1)	(1) / (1)	(1) / (1)	(1) / (1)	(1) / (1)			
		TOTAL 9/3 CSC	(4) / (4)	(4) / (4)	(3) / (3)	– / –	(2) / (1)	(1) / –	(1) / (1)	(1) / (1)	(1) / (1)	(1) / (1)	(1) / (1)	(1) / (1)	– / –	– / –	– / –
5CSC VEH	Ⓔ	ø1	(1)	(1)	(1)	(1)			(3)	(3)	(3)	(3)	(3)	(3)	(3)	3	3
#14		ø5 VEH							(3)	(3)	(3)	(3)	(3)	(3)	(3)	3	3
		ø5 PED							~~2~~	~~2~~	~~2~~	~~2~~	~~2~~	~~2~~	~~2~~		
		ø5 PPB							+	+	+	+	+	+	+		
		ø6 VEH							(3)	(3)	(3)	(3)	(3)	(3)	(3)	3	
		ø6 PED							~~2~~	~~2~~	~~2~~	~~2~~	~~2~~	~~2~~	~~2~~		
		ø6 PPB							+	+	+	+	+	+	+		
		PPB COMMON							+	+	+	+	+	+	+		
		TOTAL #14							(6)	(6)	(6)	(6)	(6)	(6)	(6)	6	3
#8		SIGNAL COMMON							(1)	(1)	(1)	(1)	(1)	(1)	(1)	1	1
		LIGHTING	(2)	(2)	(2)		(2)		(2)	(2)	(2)	(2)	(2)	(2)	(2)	2	2
		TOTAL #8	(2)	(2)	(2)		(2)		(3)	(3)	(3)	(3)	(3)	(3)	(3)	3	3
#6		CONTROLLER POWER	(2)														
TYPE B DLC		ø1	(9)	(9)													
		ø2	(6)	(6)	(6)												
		ø5															
		ø6															
		TOTAL DLCs PER RUN	(15)	(15)	(6)	–	–	–	–	–	–	–	–	–	–	–	–
VIDEO DETECTION COAX AND PWR									2	2	2	2	2	2	2	2	
CONDUIT SIZE			2–3"	2–3"	2–3"	3"	3"	3"	4"	2–3"	2–3"	2–3"	2–3"	2–3"	2–3"	OH	OH
NEW/EXISTING			E	E	E	E	E	E	E	E	E	E	E	E	E	N	N

(1) = DENOTES EXISTING CONDUCTORS TO REMAIN
+ = DENOTES EXISTING CONDUCTORS TO BE REMOVED

STAGE 2 POLE AND EQUIPMENT SCHEDULE

	STANDARD			VEH SIG MTG				PED SIGNAL MOUNTING		APS		LED LUM	SPECIAL REQUIREMENTS
No.	TYPE	SMA	LMA	ø	MAST ARM	ø	POLE	ø	MOUNTING	ø	ARROW		
Ⓐ	(1–B)	–	–	–	–	1	(TV–1–T)	1	(SP–1–T)	1	(⟶)	–	ULTIMATE POLE TO REMAIN FROM STAGE 1. SEE SHEET E–5.
Ⓑ	(PPB POST)	–	–	–	–	–	–	–	–	1	(⟶)	–	ULTIMATE POLE TO REMAIN FROM STAGE 1. SEE SHEET E–5.
Ⓒ	(15TS)	–	(12')	–	–	–	–	2 1	(SP–2–T)	–	–	(ROADWAY 1)	ULTIMATE POLE TO REMAIN FROM STAGE 1. SEE SHEET E–5.
Ⓓ	(PPB POST)	–	–	–	–	–	–	–	–	2	(⟷)	–	ULTIMATE POLE TO REMAIN FROM STAGE 1. SEE SHEET E–5.
Ⓔ	(16–1–70)	(15')	–	1	(MAS)	1	(SV–1–T)	–	–	–	–	–	EXISTING POLE TO REMAIN.
Ⓕ	(15TS)	–	(12')	–	–	1	(SV–1–T)	2	(SP–1–T)	2	(⟶)	(ROADWAY 1)	ULTIMATE POLE TO REMAIN FROM STAGE 1. SEE SHEET E–5.
Ⓖ	(18–3–70)	(30')	–	2 2	(MAT) (MAT)	2 1	~~(SV–1–T)~~ SV–2–TB	–	–	–	–	–	EXISTING POLE TO REMAIN.
Ⓗ	(1–B)	–	–	–	–	5	(TV–1–T)	6	(SP–1–T)	6	(⟷)	–	ULTIMATE POLE TO REMAIN FROM STAGE 1. SEE SHEET E–5. COVER PEDESTRIAN SIGNAL AND PPB.
Ⓘ	TEMPORARY WOOD POLE	–	12'	6 6	SW1 SW1	–	–	–	–	–	–	ROADWAY 1	INSTALL TWO VIDEO DETECTION CAMERAS ON POLE.
Ⓙ	TEMPORARY WOOD POLE	–	–	5 5	SW1 SW1	6	SV–1–T	–	–	–		–	
Ⓚ	TEMPORARY WOOD POLE	–	12'	–	–	–	–	–	–	–	–	ROADWAY 1	

( ) = DENOTES EXISTING

TEMPORARY SIGNAL SYSTEM (LOCATION 2, STAGE 2)

NO SCALE **E-26**

APPROVED FOR ELECTRICAL WORK ONLY

REVISED BY | DATE REVISED
M. JOHNSTONE | K. CALIA
CALCULATED-DESIGNED BY | CHECKED BY
CONSULTANT FUNCTIONAL SUPERVISOR
KRISTIN D. CALIA
STATE OF CALIFORNIA – DEPARTMENT OF TRANSPORTATION
Caltrans®

LAST REVISION | DATE PLOTTED => $DATE
00-00-00 | TIME PLOTTED => $TIME

BORDER LAST REVISED 7/2/2010 | USERNAME => $USER | DGN FILE => $REQUEST | RELATIVE BORDER SCALE IS IN INCHES 0 1 2 3 | UNIT 0000 | PROJECT NUMBER & PHASE 0313000246

Dist	COUNTY	ROUTE	POST MILES TOTAL PROJECT	SHEET No.	TOTAL SHEETS
03	But	32	10.1/10.5	108	126

Kristin D. Calia 11/6/15
REGISTERED CIVIL ENGINEER DATE

November 13, 2015
PLANS APPROVAL DATE

REGISTERED PROFESSIONAL ENGINEER — K. CALIA No. 62461 Exp. 9/30/17 CIVIL — STATE OF CALIFORNIA

THE STATE OF CALIFORNIA OR ITS OFFICERS OR AGENTS SHALL NOT BE RESPONSIBLE FOR THE ACCURACY OR COMPLETENESS OF SCANNED COPIES OF THIS PLAN SHEET.

FEHR AND PEERS
2990 LAVA RIDGE COURT
SUITE 200
ROSEVILLE, CA 95661

CITY OF CHICO
CAPITAL PROJECT SERVICES
411 MAIN STREET
CHICO, CA 95927

FOR ACCURATE RIGHT OF WAY AND ACCESS DATA, CONTACT RIGHT OF WAY ENGINEERING AT THE DISTRICT OFFICE.

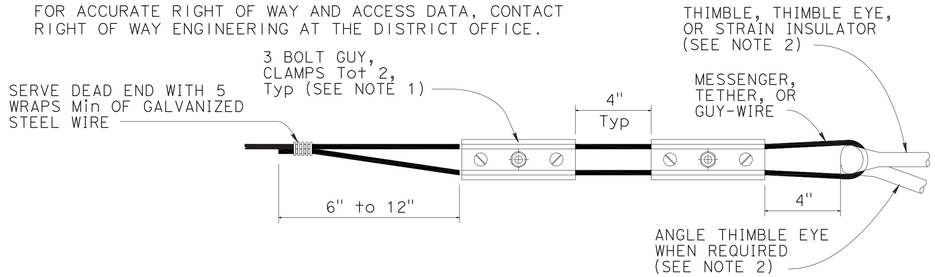

ALTERNATIVE TERMINATION OF MESSENGER WIRES USING GUY CLAMPS

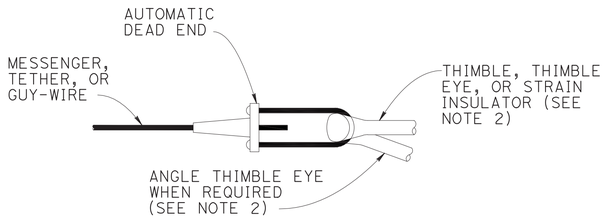

TERMINATION OF WIRES USING AUTOMATIC DEAD END

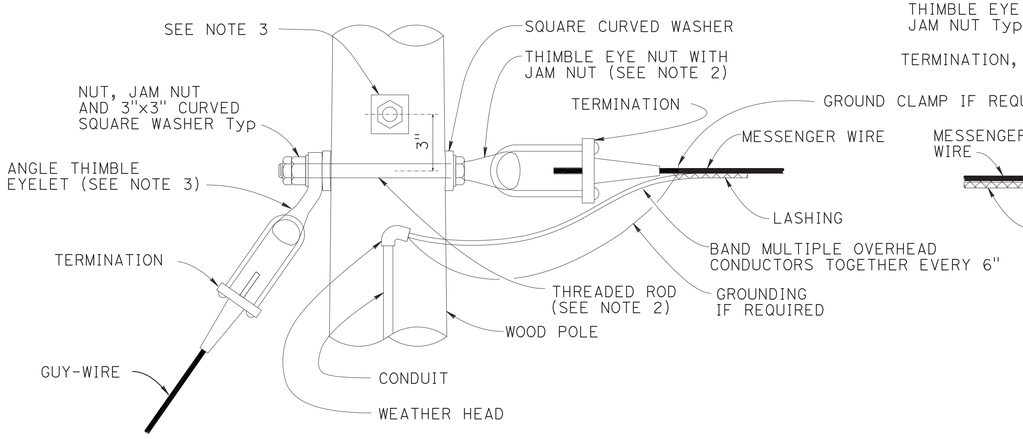

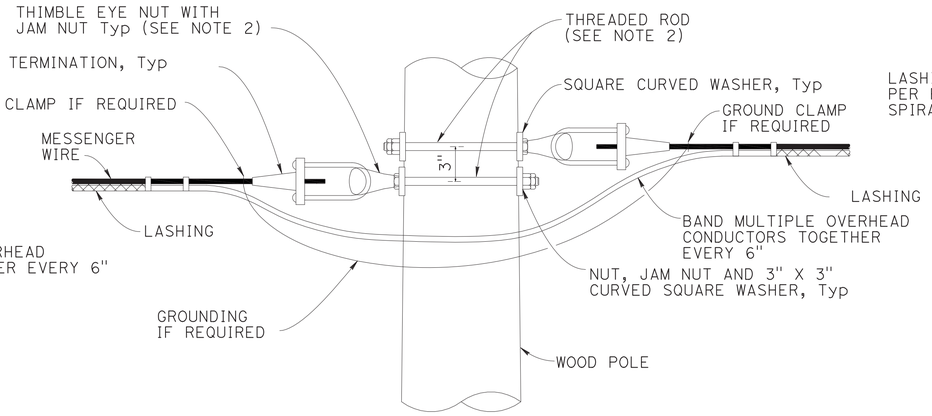

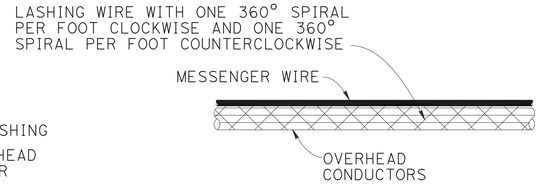

DOUBLE LASHING DETAIL

USE IF d_p IS GREATER THAN 1½"

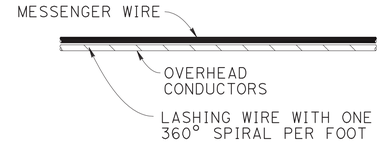

TYPICAL LASHING DETAIL

USE IF d_p IS 1½" OR LESS

POLE AT DEAD END WITH GUY-WIRE CONNECTION

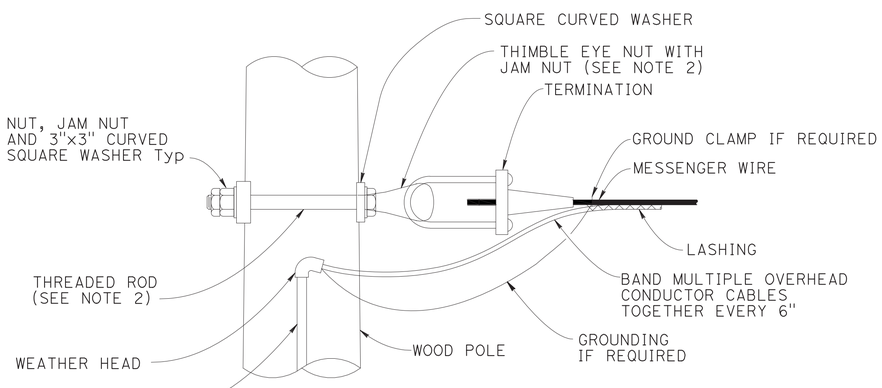

POLE AT DEAD END CONNECTION

POLE AT TANGENT OR CORNER CONNECTION

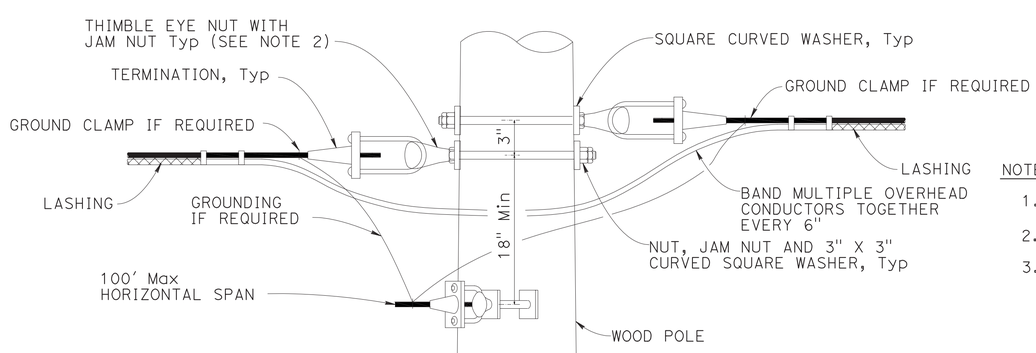

POLE AT JUNCTION CONNECTION

NOTES:

1. For guy wires use 3 clamps.
2. Use 5/8" Ø except 3/4" Ø at guyed wires.
3. Install additional angle thimble eyelet at poles with two guy wires.

ELECTRICAL DETAILS (TEMPORARY WOOD POLES)

NO SCALE **E-27**

APPROVED FOR ELECTRICAL WORK ONLY

REVISED BY | DATE REVISED
M. JOHNSTONE | K. CALIA
CALCULATED-DESIGNED BY | CHECKED BY
CONSULTANT FUNCTIONAL SUPERVISOR: KRISTIN D. CALIA

STATE OF CALIFORNIA — DEPARTMENT OF TRANSPORTATION
Caltrans®

LAST REVISION | DATE PLOTTED => $DATE
00-00-00 | TIME PLOTTED => $TIME

BORDER LAST REVISED 7/2/2010 | USERNAME => $USER | DGN FILE => $REQUEST | RELATIVE BORDER SCALE IS IN INCHES 0 1 2 3 | UNIT 0000 | PROJECT NUMBER & PHASE 0313000246

FOR ACCURATE RIGHT OF WAY AND ACCESS DATA, CONTACT RIGHT OF WAY ENGINEERING AT THE DISTRICT OFFICE.

Dist	COUNTY	ROUTE	POST MILES TOTAL PROJECT	SHEET No.	TOTAL SHEETS
03	But	32	10.1/10.5	109	126

Kristin D. Calia 11/6/15
REGISTERED CIVIL ENGINEER DATE

November 13, 2015
PLANS APPROVAL DATE

REGISTERED PROFESSIONAL ENGINEER
K. CALIA
No. 62461
Exp. 9/30/17
CIVIL
STATE OF CALIFORNIA

THE STATE OF CALIFORNIA OR ITS OFFICERS OR AGENTS SHALL NOT BE RESPONSIBLE FOR THE ACCURACY OR COMPLETENESS OF SCANNED COPIES OF THIS PLAN SHEET.

FEHR AND PEERS
2990 LAVA RIDGE COURT
SUITE 200
ROSEVILLE, CA 95661

CITY OF CHICO
CAPITAL PROJECT SERVICES
411 MAIN STREET
CHICO, CA 95927

NOTES:

1. Minimum allowable tension capacity "Qa" = 8,900 lbs.
2. Minimum installation torque "T" = 1780 lbs-ft.
3. Helical anchor detail may be used in place of expanded steel anchors.

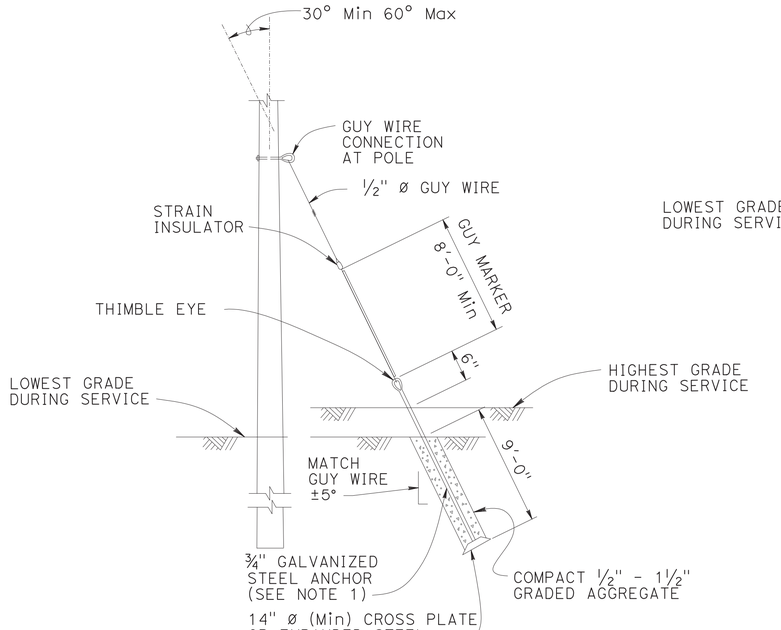

EXPANDED STEEL ANCHOR DETAIL

SEE NOTE 3

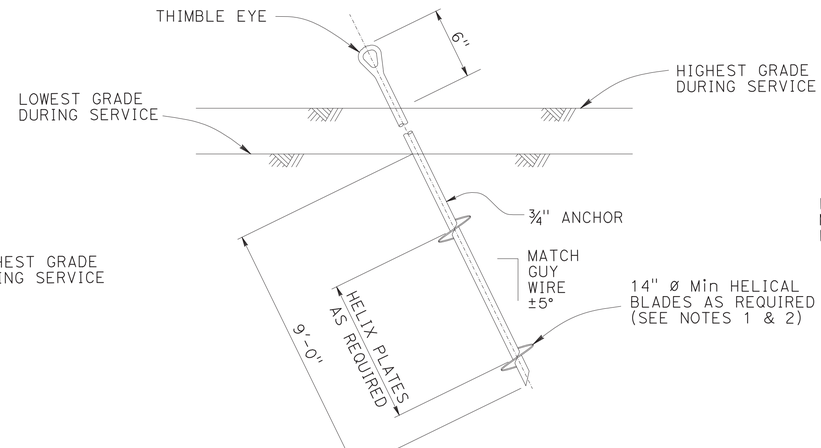

HELICAL ANCHOR DETAIL

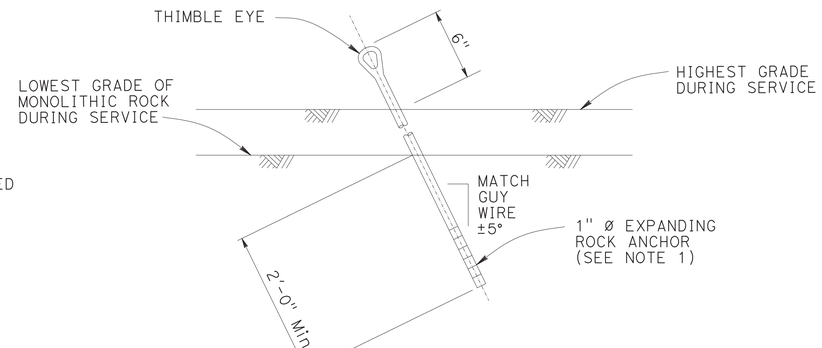

EXPANDING ROCK ANCHOR DETAIL

ELECTRICAL DETAILS (TEMPORARY WOOD POLES)

NO SCALE

E-28

APPROVED FOR ELECTRICAL WORK ONLY

STATE OF CALIFORNIA – DEPARTMENT OF TRANSPORTATION
Caltrans
CONSULTANT FUNCTIONAL SUPERVISOR: KRISTIN D. CALIA
CALCULATED-DESIGNED BY: M. JOHNSTONE
CHECKED BY: K. CALIA
REVISED BY
DATE REVISED

LAST REVISION 00-00-00 DATE PLOTTED => $DATE TIME PLOTTED => $TIME

BORDER LAST REVISED 7/2/2010
USERNAME => $USER
DGN FILE => $REQUEST
RELATIVE BORDER SCALE IS IN INCHES 0 1 2 3
UNIT 0000
PROJECT NUMBER & PHASE 0313000246

FOR ACCURATE RIGHT OF WAY AND ACCESS DATA, CONTACT RIGHT OF WAY ENGINEERING AT THE DISTRICT OFFICE.

Dist	COUNTY	ROUTE	POST MILES TOTAL PROJECT	SHEET No.	TOTAL SHEETS
03	But	32	10.1/10.5	110	126

Kristin D. Calia 11/6/15
REGISTERED CIVIL ENGINEER DATE

November 13, 2015
PLANS APPROVAL DATE

REGISTERED PROFESSIONAL ENGINEER — K. CALIA No. 62461 Exp. 9/30/17 CIVIL — STATE OF CALIFORNIA

THE STATE OF CALIFORNIA OR ITS OFFICERS OR AGENTS SHALL NOT BE RESPONSIBLE FOR THE ACCURACY OR COMPLETENESS OF SCANNED COPIES OF THIS PLAN SHEET.

FEHR AND PEERS
2990 LAVA RIDGE COURT
SUITE 200
ROSEVILLE, CA 95661

CITY OF CHICO
CAPITAL PROJECT SERVICES
411 MAIN STREET
CHICO, CA 95927

NOTES:

1. Luminaire mast arms must be in compliance with Standard Plan ES-6D with noted modifications.
2. Verify pole dimensions at tie-rod attachment height. Fabricate 8" flat bar with "L" Dimension to maintain an open gap between flanges in finished installation.
3. Not all screw heads and bolt heads are shown for clarity.
4. Mast arm not shown for clarity.

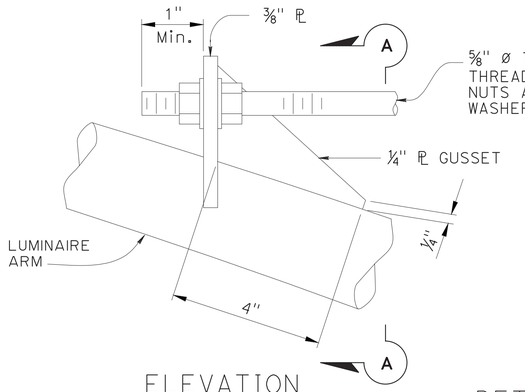

ELEVATION

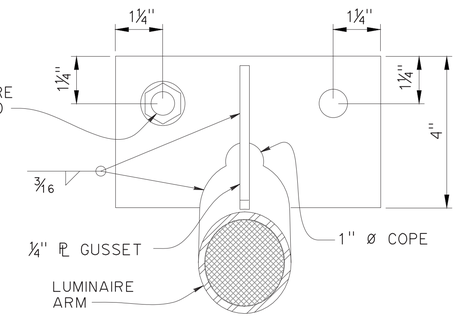

SECTION A-A

DETAIL A
TIE-ROD AT LUMINAIRE ARM
NO SCALE

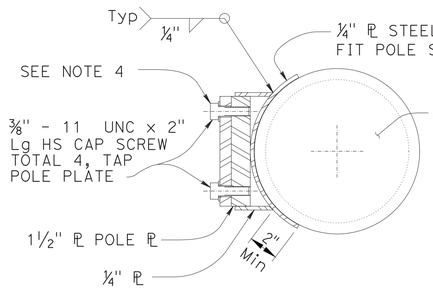

SECTION E-E

LUMINAIRE MAST ARM DATA			
PROJECTED LENGTH	N RISE	Min OD AT POLE	NOMINAL THICKNESS
6'-0"	2'-0"±	3¼"	0.1196"
8'-0"	2'-6"±	3½"	
10'-0"	3'-3"±	3⅞"	
12'-0"	4'-3"±		

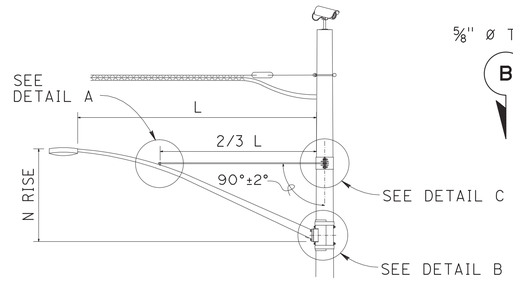

LUMINAIRE MAST ARM

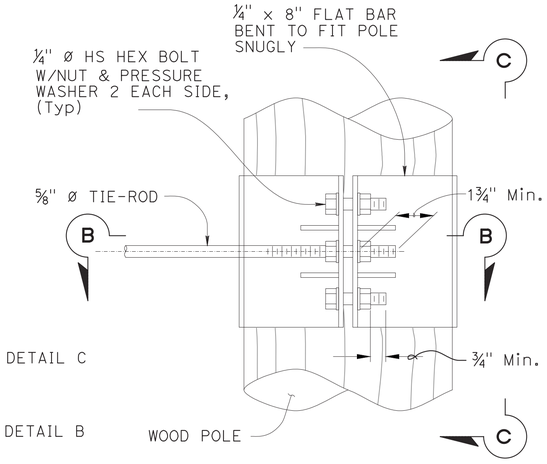

ELEVATION

NOTE:
Not all screw and bolt heads shown for clarity.

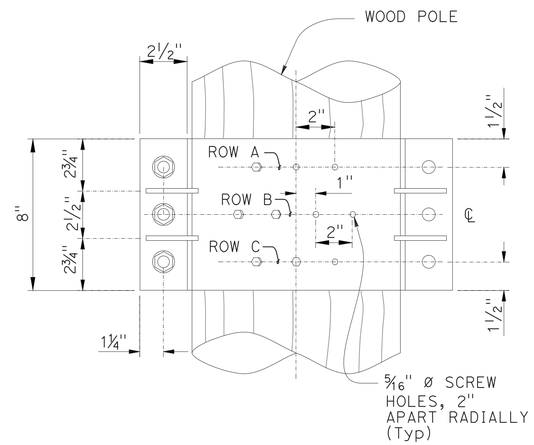

VIEW C-C

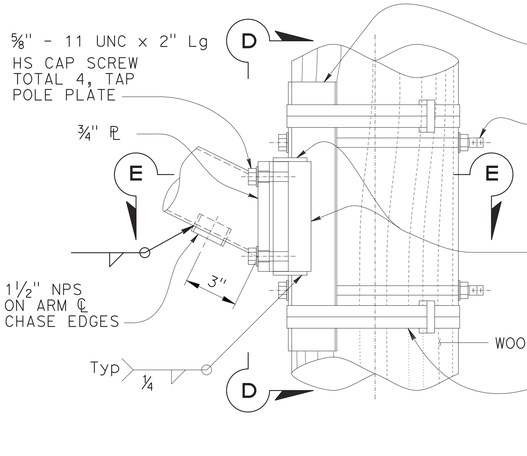

ELEVATION

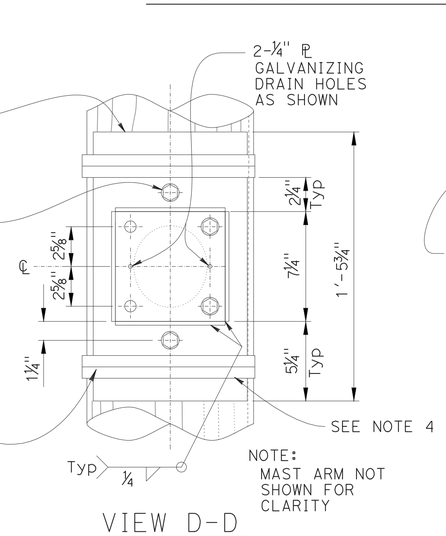

VIEW D-D

DETAIL B
ARM CONNECTION DETAILS
NO SCALE

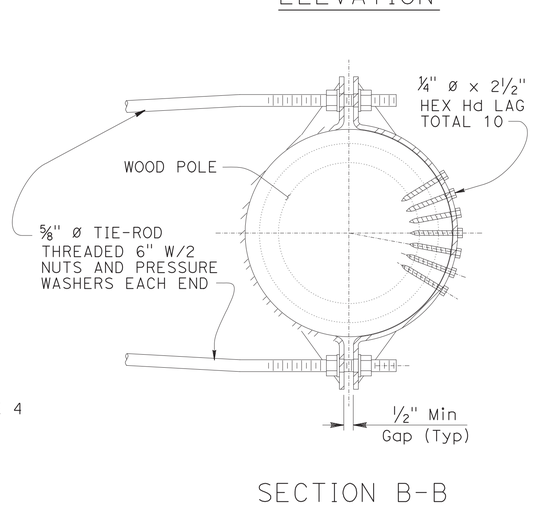

SECTION B-B

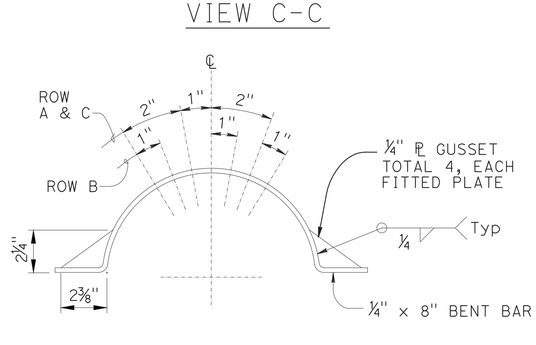

LAG SCREW AND GUSSET PLATE LAYOUT

DETAIL C
TIE-ROD AT POLE
NO SCALE

ELECTRICAL DETAILS (TEMPORARY WOOD POLES)

NO SCALE

E-29

APPROVED FOR ELECTRICAL WORK ONLY

STATE OF CALIFORNIA — DEPARTMENT OF TRANSPORTATION — Caltrans®
CONSULTANT FUNCTIONAL SUPERVISOR: KRISTIN D. CALIA
CALCULATED-DESIGNED BY: M. JOHNSTONE
CHECKED BY: K. CALIA
REVISED BY | DATE REVISED

LAST REVISION: DATE PLOTTED => $DATE 00-00-00 TIME PLOTTED => $TIME

BORDER LAST REVISED 7/2/2010 | USERNAME => $USER | DGN FILE => $REQUEST | RELATIVE BORDER SCALE IS IN INCHES 0 1 2 3 | UNIT 0000 | PROJECT NUMBER & PHASE 0313000246

FOR ACCURATE RIGHT OF WAY AND ACCESS DATA, CONTACT
RIGHT OF WAY ENGINEERING AT THE DISTRICT OFFICE.

Dist	COUNTY	ROUTE	POST MILES TOTAL PROJECT	SHEET No.	TOTAL SHEETS
03	But	32	10.1/10.5	111	126

Kristin D. Calia 11/6/15
REGISTERED CIVIL ENGINEER DATE

November 13, 2015
PLANS APPROVAL DATE

REGISTERED PROFESSIONAL ENGINEER — K. CALIA No. 62461 Exp. 9/30/17 CIVIL — STATE OF CALIFORNIA

THE STATE OF CALIFORNIA OR ITS OFFICERS OR AGENTS SHALL NOT BE RESPONSIBLE FOR THE ACCURACY OR COMPLETENESS OF SCANNED COPIES OF THIS PLAN SHEET.

FEHR AND PEERS
2990 LAVA RIDGE COURT
SUITE 200
ROSEVILLE, CA 95661

CITY OF CHICO
CAPITAL PROJECT SERVICES
411 MAIN STREET
CHICO, CA 95927

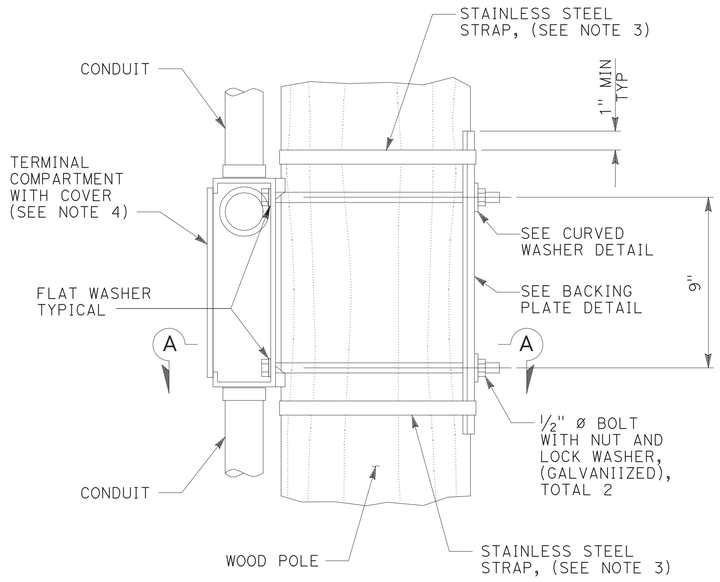

ELEVATION

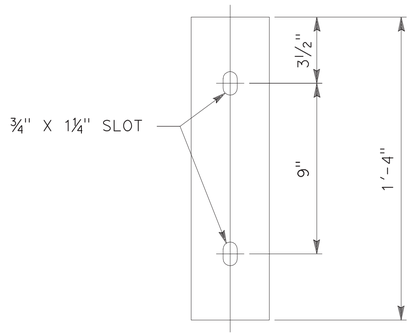

ELEVATION

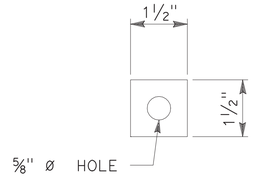

ELEVATION

PLAN

BACKING PLATE DETAIL

PLAN

CURVED WASHER DETAIL

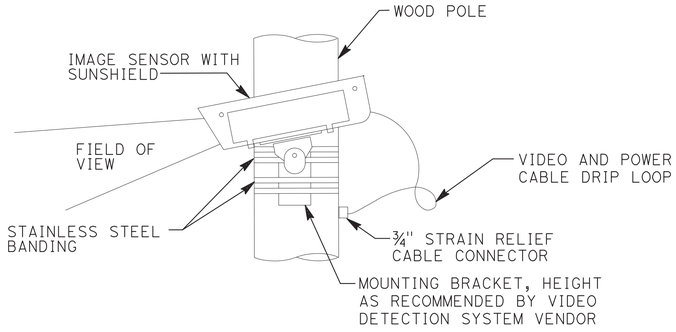

VIDEO DETECTION CAMERA ASSEMBLY MOUNTING DETAIL

NO SCALE

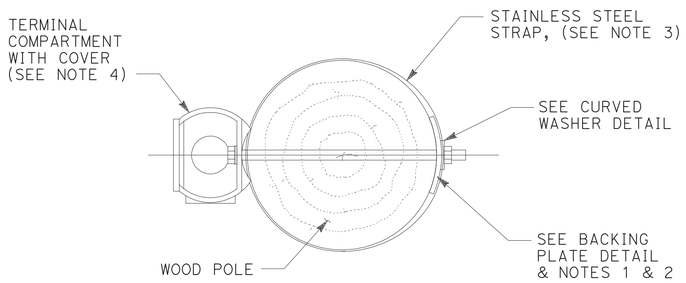

SECTION A-A

NOTES:

1. THE CONTRACTOR TO VERIFY POLE DIMENSIONS AT TERMINAL COMPARTMENT FOR FABRICATION OF BACKING PLATE AND CURVED WASHER.
2. BACKING PLATE TO BE GALVANIZED AFTER FABRICATION.
3. ¾" X 0.044" MINIMUM, ROUNDED EDGE STAINLESS STEEL STRAPS, DOUBLE WRAPPED WITH 2" LONG BEND UNDER STAINLESS STEEL STRAP BUCKLE.
4. FOR DETAILS NOT SHOWN SEE STANDARD PLAN ES-4D

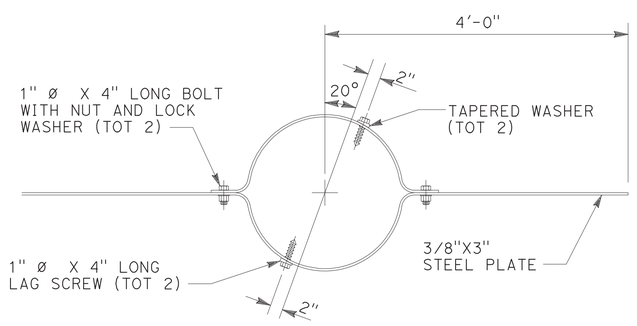

WIND ANCHOR

TO BE INSTALLED PERPENDICULAR TO MAST ARMS AND 2'-0" MIN BELOW GRADE

SIDE MOUNTING TERMINAL COMPARTMENT

FOR DETAILS NOT SHOWN SEE ES-4D SHEET

NOTE:
THE CONTRACTOR SHALL VERIFY ALL CONTROLLING FIELD DIMENSIONS BEFORE ORDERING OR FABRICATING ANY MATERIAL.

ELECTRICAL DETAILS (TEMPORARY WOOD POLES)

NO SCALE **E-30**

APPROVED FOR ELECTRICAL WORK ONLY

STATE OF CALIFORNIA – DEPARTMENT OF TRANSPORTATION
Caltrans
CONSULTANT FUNCTIONAL SUPERVISOR: KRISTIN D. CALIA
CALCULATED-DESIGNED BY: M. JOHNSTONE
CHECKED BY: K. CALIA
REVISED BY | DATE REVISED

LAST REVISION | DATE PLOTTED => $DATE | TIME PLOTTED => $TIME
00-00-00

BORDER LAST REVISED 7/2/2010 | USERNAME => $USER | DGN FILE => $REQUEST | RELATIVE BORDER SCALE IS IN INCHES 0 1 2 3 | UNIT 0000 | PROJECT NUMBER & PHASE 0313000246

FOR ACCURATE RIGHT OF WAY AND ACCESS DATA, CONTACT
RIGHT OF WAY ENGINEERING AT THE DISTRICT OFFICE.

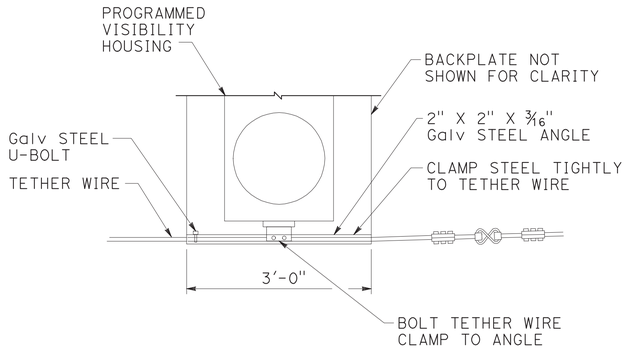

TETHER WIRE ATTACHMENT FOR PROGRAMMED VISIBILITY SIGNAL FACE

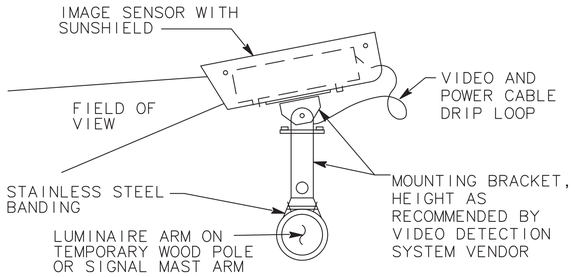

VIDEO DETECTION CAMERA ASSEMBLY MAST ARM MOUNTING DETAIL

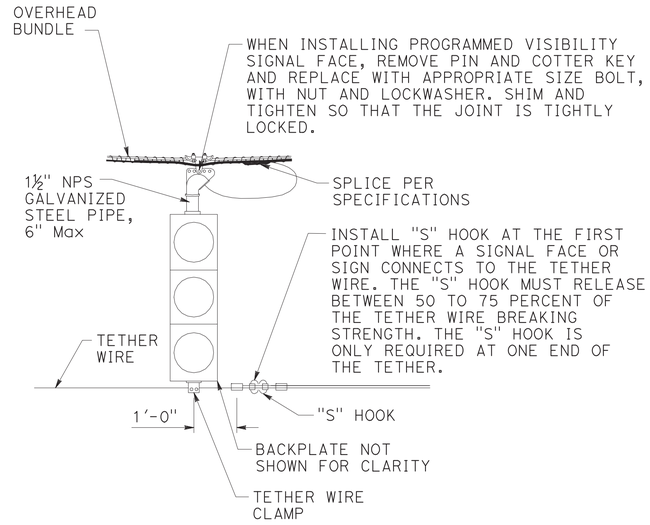

SIGNAL FACE SUPPORT

Dist	COUNTY	ROUTE	POST MILES TOTAL PROJECT	SHEET No.	TOTAL SHEETS
03	But	32	10.1/10.5	112	126

Kristin D. Calia 11/6/15
REGISTERED CIVIL ENGINEER DATE

November 13, 2015
PLANS APPROVAL DATE

REGISTERED PROFESSIONAL ENGINEER — K. CALIA No. 62461 Exp. 9/30/17 CIVIL — STATE OF CALIFORNIA

THE STATE OF CALIFORNIA OR ITS OFFICERS OR AGENTS SHALL NOT BE RESPONSIBLE FOR THE ACCURACY OR COMPLETENESS OF SCANNED COPIES OF THIS PLAN SHEET.

FEHR AND PEERS
2990 LAVA RIDGE COURT
SUITE 200
ROSEVILLE, CA 95661

CITY OF CHICO
CAPITAL PROJECT SERVICES
411 MAIN STREET
CHICO, CA 95927

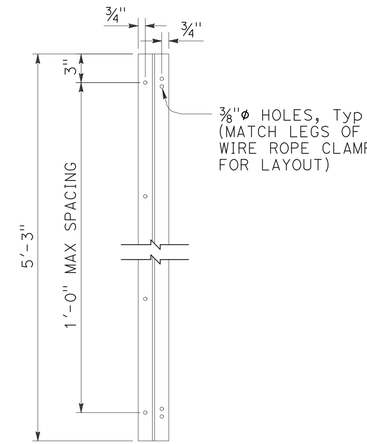

Z-BAR ELEVATION

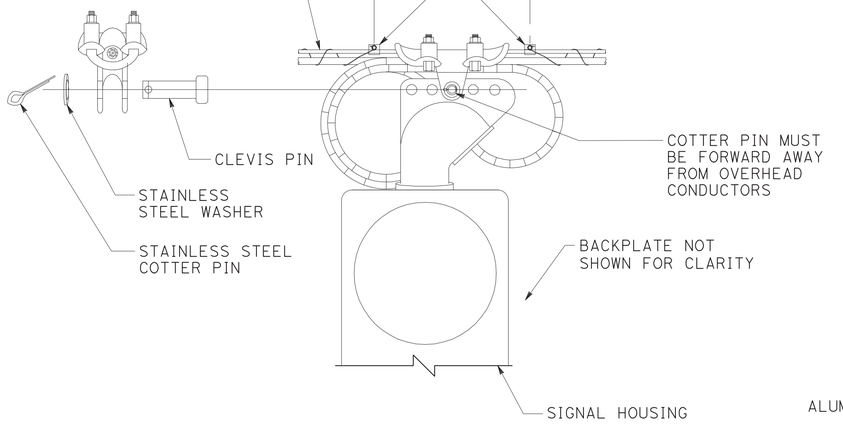

MESSENGER WIRE CLAMP COTTER PIN DETAIL

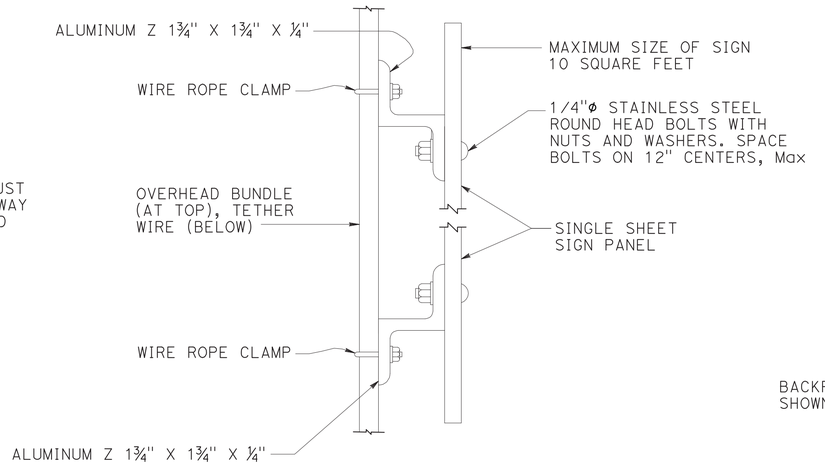

THE OVERLAPPED CONNECTION OF ADJUSTABLE HANGERS MUST USE A MINIMUM OF 2 BOLTS WITH A MINIMUM SPACING BETWEEN BOLTS OF 2"

SIGN MOUNTING DETAIL

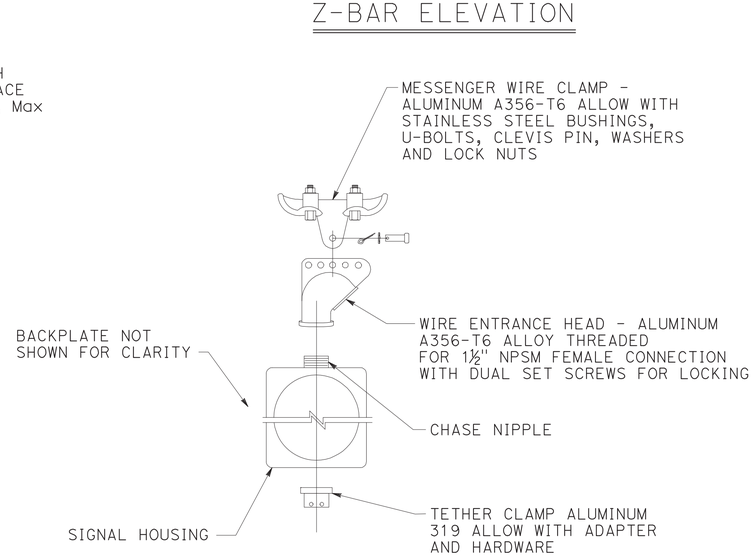

SIGNAL FACE SUPPORT EXPLODED VIEW

ELECTRICAL DETAILS (TEMPORARY WOOD POLES)

NO SCALE

E-31

APPROVED FOR ELECTRICAL WORK ONLY

CALCULATED-DESIGNED BY M. JOHNSTONE
CHECKED BY K. CALIA
CONSULTANT FUNCTIONAL SUPERVISOR KRISTIN D. CALIA
STATE OF CALIFORNIA - DEPARTMENT OF TRANSPORTATION
Caltrans

REVISED BY | DATE REVISED

LAST REVISION DATE PLOTTED => $DATE
00-00-00 TIME PLOTTED => $TIME

BORDER LAST REVISED 7/2/2010 | USERNAME => $USER | DGN FILE => $REQUEST | RELATIVE BORDER SCALE IS IN INCHES 0 1 2 3 | UNIT 0000 | PROJECT NUMBER & PHASE 0313000246

FOR ACCURATE RIGHT OF WAY AND ACCESS DATA, CONTACT
RIGHT OF WAY ENGINEERING AT THE DISTRICT OFFICE.

LEGEND

- A — Wood Pole with Attachments
- —TS— Overhead Bundle with Signal Faces (See Note 2)
- —OH— Overhead Bundle
- Guy Anchor

POLE SELECTION TABLE

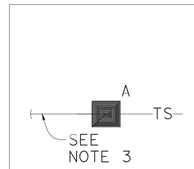

CASE 1GT

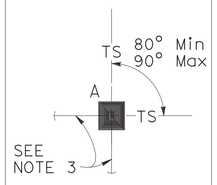

CASE 2GT

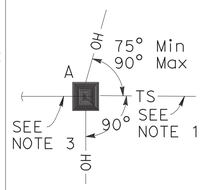

CASE 3GT

	MAXIMUM dp	1"	1.5"	2.0"	1"	1.5"	2.0"	1"	1.5"	2.0"
OVERHEAD BUNDLE HORIZONTAL SPAN Max 50′	MINIMUM POLE CLASS	H-2	H-3	H-3	H-2	H-2	H-2	H-3	H-4	H-4
	POLE EMBEDMENT (E)		10′			10′			11′	
100′	MINIMUM POLE CLASS	H-3	H-3	H-4	H-2	H-3	H-3	H-4	H-4	H-5
	POLE EMBEDMENT (E)		11′			10′			11′	
150′	MINIMUM POLE CLASS	H-3	H-4	H-4	H-2	H-3	H-4	H-4	H-5	H-5
	POLE EMBEDMENT (E)		11′			10′			11′	

NOTES:

1. In addition to other restrictions on maximum horizontal span, this horizontal span must not exceed 100′.
2. Cases 1N, 3N and 4N may substitute the attachments shown in Case 5N if the photovoltaic panel is not included.
3. Guy wire in line with opposing span ± 5°.

(1) CCTV camera assembly or vehicle detection system
(2) Overhead bundle consisting of a ⅜" ø messenger wire and overhead conductors and lashing wire.
(3) Luminaire with mast arm
(4) Pedestrian pushbutton
(5) Signal face with 3 indications or single sheet sign panel (10 SQFT Max)
(6) Riser with weather head as required
(7) Pull box as required
(8) Grounding as required
(9) ⅜" ø tether wire
(10) ½" ø guy wire with guy marker and strain insulator. See anchorage detail.
(11) Pedestrian signal head

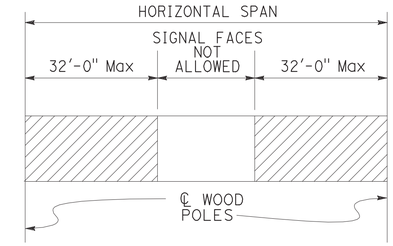

LOCATION OF SIGNAL FACES

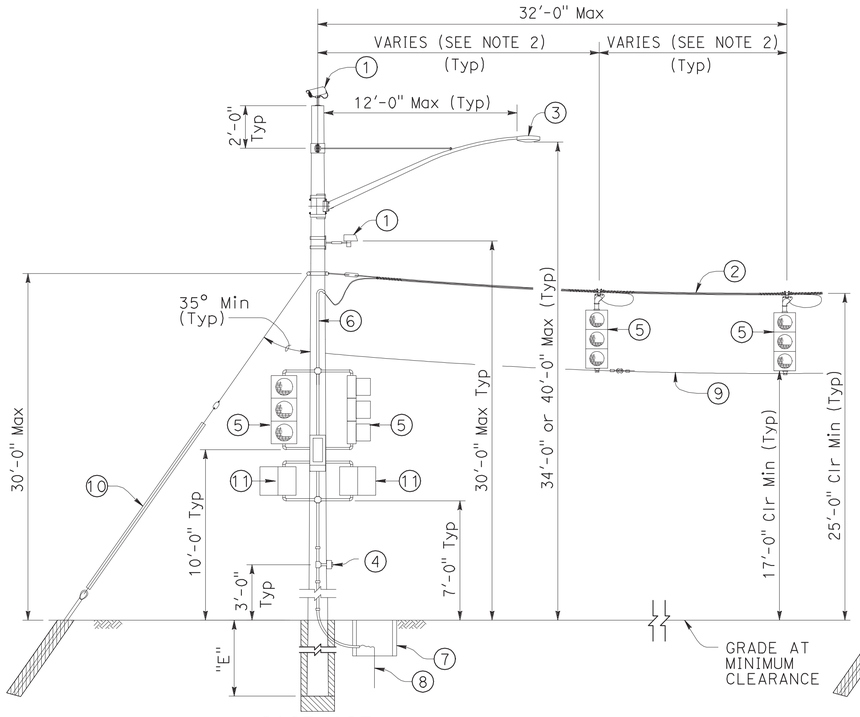

CASE 1GT
POLE AT DEAD END WITH ATTACHMENTS

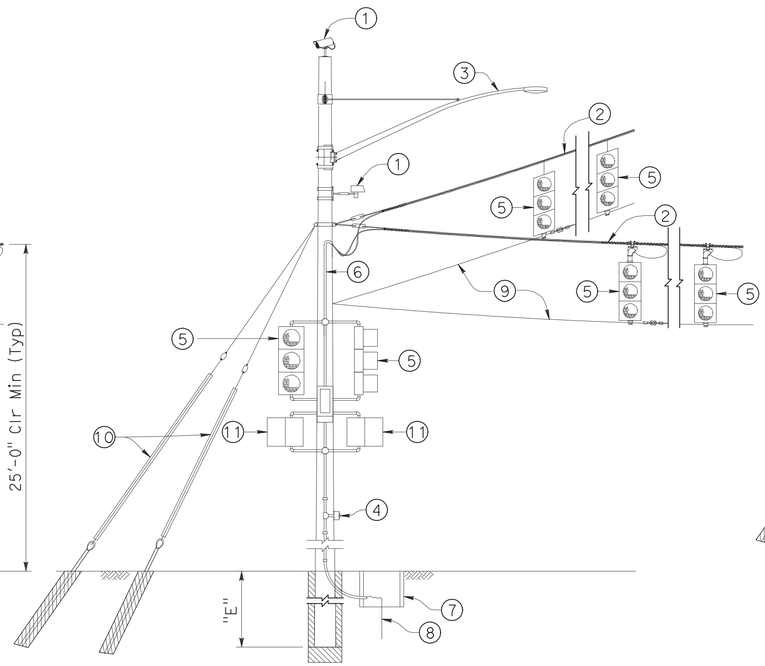

CASE 2GT
POLE AT CORNER WITH ATTACHMENTS

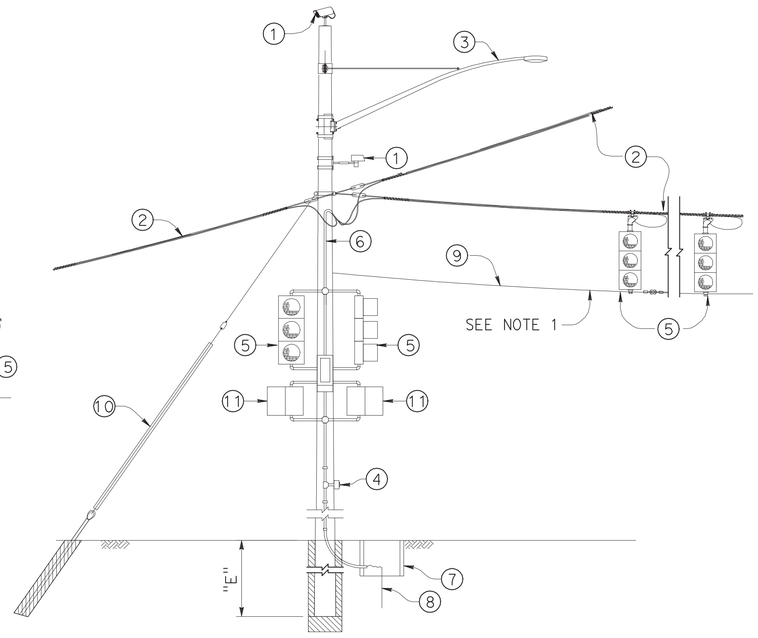

CASE 3GT
POLE AT JUNCTION WITH ATTACHMENTS

ELECTRICAL DETAILS (TEMPORARY WOOD POLES)

NO SCALE **E-32**

Dist	COUNTY	ROUTE	POST MILES TOTAL PROJECT	SHEET No.	TOTAL SHEETS
03	But	32	10.1/10.5	113	126

Kristin D. Calia 11/6/15
REGISTERED CIVIL ENGINEER DATE

November 13, 2015
PLANS APPROVAL DATE

K. CALIA No. 62461 Exp. 9/30/17 CIVIL — REGISTERED PROFESSIONAL ENGINEER — STATE OF CALIFORNIA

THE STATE OF CALIFORNIA OR ITS OFFICERS OR AGENTS SHALL NOT BE RESPONSIBLE FOR THE ACCURACY OR COMPLETENESS OF SCANNED COPIES OF THIS PLAN SHEET.

FEHR AND PEERS
2990 LAVA RIDGE COURT
SUITE 200
ROSEVILLE, CA 95661

CITY OF CHICO
CAPITAL PROJECT SERVICES
411 MAIN STREET
CHICO, CA 95927

REVISED BY | DATE REVISED
M. JOHNSTONE | K. CALIA
CALCULATED-DESIGNED BY | CHECKED BY
CONSULTANT FUNCTIONAL SUPERVISOR: KRISTIN D. CALIA
STATE OF CALIFORNIA – DEPARTMENT OF TRANSPORTATION
Caltrans

APPROVED FOR ELECTRICAL WORK ONLY

BORDER LAST REVISED 7/2/2010 | USERNAME => $USER | DGN FILE => $REQUEST | RELATIVE BORDER SCALE IS IN INCHES 0 1 2 3 | UNIT 0000 | PROJECT NUMBER & PHASE 0313000246

LAST REVISION | DATE PLOTTED => $DATE | TIME PLOTTED => $TIME
00-00-00

FOR ACCURATE RIGHT OF WAY AND ACCESS DATA, CONTACT
RIGHT OF WAY ENGINEERING AT THE DISTRICT OFFICE.

NOTE:
THE QUANTITIES ON THIS SHEET ARE FOR INFORMATION ONLY AND ARE NOT SEPARATE PAY ITEMS.

Dist	COUNTY	ROUTE	POST MILES TOTAL PROJECT	SHEET No.	TOTAL SHEETS
03	But	32	10.1/10.5	114	126

Kristin D. Calia 11/6/15
REGISTERED CIVIL ENGINEER DATE

November 13, 2015
PLANS APPROVAL DATE

REGISTERED PROFESSIONAL ENGINEER
K. CALIA
No. 62461
Exp. 9/30/17
CIVIL
STATE OF CALIFORNIA

THE STATE OF CALIFORNIA OR ITS OFFICERS OR AGENTS SHALL NOT BE RESPONSIBLE FOR THE ACCURACY OR COMPLETENESS OF SCANNED COPIES OF THIS PLAN SHEET.

FEHR AND PEERS
2990 LAVA RIDGE COURT
SUITE 200
ROSEVILLE, CA 95661

CITY OF CHICO
CAPITAL PROJECT SERVICES
411 MAIN STREET
CHICO, CA 95927

MODIFY SIGNAL AND LIGHTING (LOCATION 1)

ITEM	No. 5(T) WELDED PULL BOX	No. 6(T) WELDED PULL BOX	No. 6(E)(T) WELDED PULL BOX	2"C TYPE 3	3"C TYPE 3	4"C TYPE 3	No. 4 CONDUCTOR	No. 8 CONDUCTOR	12 CSC	9 CSC	5 CSC	3 CSC	DLC	EVD SYSTEM	SIC	DETECTOR HANDHOLE	TYPE A DETECTOR LOOP	TYPE D DETECTOR LOOP	PEDESTRIAN SIGNAL HEAD	3-SECTION VEHICLE SIGNAL	APS	PPB POST AND FOUNDATION	TYPE 1-B SIGNAL STANDARD	TYPE 1-B FOUNDATION	POLE TYPE 17-3-100 WITH 20' SMA	POLE TYPE 17-3-100 CIDH PILE	POLE TYPE 15TS ELECTROLIER	TYPE 15TS CIDH PILE	9'x5'-2"x3.5" PCC CONTROLLER PAD AND CONTROLLER/BBS FOUNDATION	MODIFY SERVICE BREAKER	[BC] INSTALL PULL BOX TO Exist CONDUIT	[SC] SPLICE CONDUCTORS	[RL] EX. LUMINAIRE TO NEW STANDARD
SHEET No.	EA	EA	EA	LF	LF	LF	LF	LF	LF	LF	LF	LF	LF	EA	LF	EA	EA	EA	EA	EA	EA	EA	EA	EA	EA	EA	EA	EA	EA	EA	EA	EA	EA
E-2	10	10	2	625	425	50	1000	1200	50	1300	2775	2375	11475	1	225	16	42	14	8	7	8	3	2	2	1	1	2	2	1	1	9	1	3

MODIFY SIGNAL AND LIGHTING (LOCATION 1)

ITEM	[RC] PULL BOX	[RC] TYPE 15 - FBS	[RS] TYPE 15 POLE	[RS] TYPE 1-B POLE	[RS] 20', SMA, POLE AND ELECTROLIER	[RS] PPB POST	[RS] PEDESTRIAN SIGNAL HEAD	[RS] 3-SECTION VEHICLE SIGNAL	[RS] 170 CONTROLLER/ 332 CABINET
SHEET No.	EA	EA	EA	EA	EA	EA	EA	EA	EA
E-4	24	1	2	1	1	3	8	3	1

MODIFY SIGNAL AND LIGHTING (LOCATION 2)

ITEM	[RC] PULL BOX	[RS] TYPE 1-B POLE	[RS] 20' SMA AND POLE	[RS] 45', SMA, POLE AND ELECTROLIER	[RS] PEDESTRIAN SIGNAL HEAD	[RS] 3-SECTION VEHICLE SIGNAL	[RS] 2070 CONTROLLER/ 332 CABINET
SHEET No.	EA	EA	EA	EA	EA	EA	EA
E-7	20	6	1	1	8	7	1

MODIFY SIGNAL AND LIGHTING (LOCATION 2)

ITEM	No. 5(T) WELDED PULL BOX	No. 6(T) WELDED PULL BOX	No. 6(E)(T) WELDED PULL BOX	2"C TYPE 3	3"C TYPE 3	4"C TYPE 3	No. 4 CONDUCTOR	No. 8 CONDUCTOR	12 CSC	9 CSC	5 CSC	3 CSC	DLC	EVD SYSTEM	SIC	TELEPHONE CABLE	DETECTOR HANDHOLE	TYPE A DETECTOR LOOP	TYPE D DETECTOR LOOP	PEDESTRIAN SIGNAL HEAD	APS	PPB POST AND FOUNDATION	3-SECTION VEHICLE SIGNAL	TYPE 1-B SIGNAL STANDARD	TYPE 1-B FOUNDATION	POLE TYPE 19-4-100 WITH 25' SMA	POLE TYPE 19-4-100 CIDH PILE	POLE TYPE 26-4-100 WITH 40' SMA	POLE TYPE 26-4-100 CIDH PILE	POLE TYPE 15TS ELECTROLIER	TYPE 15TS CIDH PILE	LED LUMINAIRE	TELEPHONE DEMARCATION CABINET	TELEPHONE DEMARCATION CABINET FOUNDATION	TELEPHONE SERVICE POINT	9'x5'-2"x3.5" PCC CONTROLLER PAD AND CONTROLLER/BBS FOUNDATION	MODIFY SERVICE BREAKER	[BC] INSTALL PULL BOX TO Exist CONDUIT	[CC] CONNECT NEW AND Exist CONDUIT	[RL] EX. LUMINAIRE TO NEW STANDARD
SHEET No.	EA	EA	EA	LF	LF	LF	LF	LF	LF	LF	LF	LF	LF	EA	LF	LF	EA	EA	EA	EA	EA	EA	EA	EA	EA	EA	EA	EA	EA	EA	EA	EA	EA	EA	EA	EA	EA	EA	EA	EA
E-5	14	14	2	1450	1375	10	100	1625	600	1975	125	2450	10050	1	825	200	17	43	11	8	8	2	11	3	3	1	1	1	1	2	2	3	1	1	1	1	1	3	1	1

SIGNAL AND LIGHTING (LOCATION 3)

ITEM	No. 5(T) WELDED PULL BOX	No. 6(T) WELDED PULL BOX	No. 6(E)(T) WELDED PULL BOX	2"C TYPE 3	3"C TYPE 3	No. 2 CONDUCTOR	No. 6 CONDUCTOR	No. 8 CONDUCTOR	12 CSC	9 CSC	5 CSC	3 CSC	DLC	EVD SYSTEM	SIC	DETECTOR HANDHOLE	TYPE A DETECTOR LOOP	TYPE D DETECTOR LOOP	MODIFIED TYPE D BIKE DETECTOR LOOP	PEDESTRIAN SIGNAL HEAD	APS	3-SECTION VEHICLE SIGNAL	TYPE 1-B SIGNAL STANDARD	TYPE 1-B FOUNDATION	POLE TYPE 19-3-100 WITH 25' SMA	POLE TYPE 19-3-100 CIDH PILE	POLE TYPE 26-4-100 WITH 40' SMA	POLE TYPE 26-4-100 WITH 45' SMA	POLE TYPE 26-4-100 CIDH PILE	LED LUMINAIRE	TYPE III-AF ENCLOSURE	TYPE III-AF FOUNDATION	12'x5'-2"x3.5" PCC CONTROLLER PAD AND CONTROLLER/BBS FOUNDATION
SHEET No.	EA	EA	EA	LF	LF	LF	LF	LF	LF	LF	LF	LF	LF	EA	LF	EA	EA	EA	EA	EA	EA	EA	EA	EA	EA	EA	EA	EA	EA	EA	EA	EA	EA
E-8	8	7	1	675	500	425	50	625	225	775	175	1025	2900	1	150	12	28	7	1	8	8	12	5	5	1	1	1	1	2	3	1	1	1

APPROVED FOR ELECTRICAL WORK ONLY

ELECTRICAL QUANTITIES

NO SCALE

E-33

STATE OF CALIFORNIA - DEPARTMENT OF TRANSPORTATION
Caltrans
CONSULTANT FUNCTIONAL SUPERVISOR: KRISTIN D. CALIA
CALCULATED-DESIGNED BY: K. CALIA
CHECKED BY: M. JOHNSTONE
REVISED BY
DATE REVISED

LAST REVISION DATE PLOTTED => $DATE
00-00-00 TIME PLOTTED => $TIME

BORDER LAST REVISED 7/2/2010
USERNAME => $USER
DGN FILE => $REQUEST
RELATIVE BORDER SCALE IS IN INCHES 0 1 2 3
UNIT 0000
PROJECT NUMBER & PHASE 0313000246

FOR ACCURATE RIGHT OF WAY AND ACCESS DATA, CONTACT
RIGHT OF WAY ENGINEERING AT THE DISTRICT OFFICE.

NOTE:
THE QUANTITIES ON THIS SHEET ARE FOR INFORMATION ONLY AND ARE NOT SEPARATE PAY ITEMS.

Dist	COUNTY	ROUTE	POST MILES TOTAL PROJECT	SHEET No.	TOTAL SHEETS
03	But	32	10.1/10.5	115	126

Kristin D. Calia 11/6/15
REGISTERED CIVIL ENGINEER DATE

November 13, 2015
PLANS APPROVAL DATE

REGISTERED PROFESSIONAL ENGINEER
K. CALIA
No. 62461
Exp. 9/30/17
CIVIL
STATE OF CALIFORNIA

THE STATE OF CALIFORNIA OR ITS OFFICERS OR AGENTS SHALL NOT BE RESPONSIBLE FOR THE ACCURACY OR COMPLETENESS OF SCANNED COPIES OF THIS PLAN SHEET.

FEHR AND PEERS
2990 LAVA RIDGE COURT
SUITE 200
ROSEVILLE, CA 95661

CITY OF CHICO
CAPITAL PROJECT SERVICES
411 MAIN STREET
CHICO, CA 95927

SIGNAL AND LIGHTING (LOCATION 4)

ITEM	No. 5(T) WELDED PULL BOX	No. 6(T) WELDED PULL BOX	No. 6(E)(T) WELDED PULL BOX	2"C TYPE 3	3"C TYPE 3	No. 2 CONDUCTOR	No. 6 CONDUCTOR	No. 8 CONDUCTOR	12 CSC	9 CSC	5 CSC	3 CSC	DLC	EVD SYSTEM	SIC	DETECTOR HANDHOLE	TYPE A DETECTOR LOOP	TYPE D DETECTOR LOOP	MODIFIED TYPE D BIKE DETECTOR LOOP	PEDESTRIAN SIGNAL HEAD	APS	3-SECTION VEHICLE SIGNAL	TYPE 1-B SIGNAL STANDARD	TYPE 1-B FOUNDATION	POLE TYPE 19-3-100 WITH 25' SMA	POLE TYPE 19-3-100 CIDH PILE	POLE TYPE 26-4-100 WITH 40' SMA	POLE TYPE 26-4-100 CIDH PILE	POLE TYPE 15TS ELECTROLIER	POLE TYPE 15TS CIDH PILE	POLE TYPE 15 ELECTROLIER	TYPE 15 CIDH PILE	LED LUMINAIRES	TYPE III-AF ENCLOSURE	TYPE III-AF FOUNDATION	12'x5'-2"x3.5" PCC CONTROLLER PAD AND CONTROLLER/BBS FOUNDATION	[CB] INSTALL CONDUIT IN Exist PULL BOX
SHEET No.	EA	EA	EA	LF	LF	LF	LF	LF	LF	LF	LF	LF	LF	EA	LF	EA	EA	EA	EA	EA	EA	EA	EA	EA	EA	EA	EA	EA	EA	EA	EA	EA	EA	EA	EA	EA	EA
E-10	7	9	1	625	475	100	25	625	25	650	600	950	1845	1	375	6	16	5	1	8	8	9	6	6	1	1	1	1	1	1	1	1	4	1	1	1	–
E-12	3	–	–	1180	–	–	–	–	–	–	–	–	–	–	2725	–	–	–	–	–	–	–	–	–	–	–	–	–	–	–	–	–	–	–	–	–	1
E-13	–	–		260		–	–	–	–	–	–	–	–	–	925	–	–	–	–	–	–	–	–	–	–	–	–	–	–	–	–	–	–	–	–	–	2

MODIFY LIGHTING AND SIGN ILLUMINATION

ITEM	No. 5 (T) WELDED PULL BOX	2"C TYPE 3	No. 2 CONDUCTOR	No. 8 CONDUCTOR	POLE TYPE 15 ELECTROLIER	TYPE 15 CIDH PILE	LED LUMINAIRE	INSTALL LUMINAIRE ON Exist STANDARD	MODIFY SERVICE CABINET	[BC] INSTALL PULL BOX TO Exist CONDUIT	[CC] CONNECT NEW AND Exist CONDUITS	[RC] PULL BOX	[RS] ELECTROLIER	[SC] SPLICE CONDUCTORS	REMOVE CONDUCTORS
SHEET No.	EA	LF	LF	LF	EA	EA	EA	EA	EA	EA	EA	EA	EA	EA	LF
E-14	19	2200	450	6950	3	3	5	4	2	7	1	15	6	7	2700

LIGHTING (CITY STREET)

ITEM	No. 5 PB AND FUSED DISCONNECT	No. 5 PB WITH GROUND ROD	2"C TYPE 3	No. 8 CONDUCTOR	No. 10 CONDUCTOR	TYPE 15 STANDARD WITH 6' LUMINAIRE ARM AND BETA 200 W EQUIVALENT LUMINAIRE WITH PEU
SHEET No.	EA	EA	LF	LF	LF	EA
E-35	1	1	78	156	78	1

TEMPORARY SIGNAL SYSTEM

ITEM	No. 8 CONDUCTOR	No. 14 CONDUCTOR	1/2" 7-STRAND SPAN WIRE	CAMERA COAX AND POWER	VIDEO DETECTION CAMERA	PEDESTRIAN SIGNAL HEAD	3-SECTION VEHICLE SIGNAL	TEMP WOOD POLE - 40'	TEMP WOOD POLE - 40' WITH 200 W HPS LUMINAIRE	[CB] INSTALL CONDUIT IN Exist PULL BOX	[RC] OH CONDUCTOR	[SC] SPLICE CONDUCTORS
SHEET No.	LF	LF	LF	LF	EA	EA	EA	EA	EA	EA	LF	EA
E-19	575	2650	–	875	2	–	–	–	–	–	–	2
E-21	–	–	–	50	1	1	–	–	1	1	–	–
E-23	525	6725	–	1150	2	–	–	–	–	1	–	1
E-25	450	700	150	1200	–	–	5	1	2	2	150	1

APPROVED FOR ELECTRICAL WORK ONLY

ELECTRICAL QUANTITIES

NO SCALE

E-34

STATE OF CALIFORNIA – DEPARTMENT OF TRANSPORTATION
Caltrans
CONSULTANT FUNCTIONAL SUPERVISOR: KRISTIN D. CALIA
CALCULATED-DESIGNED BY: M. JOHNSTONE
CHECKED BY: K. CALIA
REVISED BY
DATE REVISED

LAST REVISION DATE PLOTTED => $DATE
00-00-00 TIME PLOTTED => $TIME

BORDER LAST REVISED 7/2/2010
USERNAME => $USER
DGN FILE => $REQUEST
RELATIVE BORDER SCALE IS IN INCHES 0 1 2 3
UNIT 0000
PROJECT NUMBER & PHASE 0313000246

FOR ACCURATE RIGHT OF WAY AND ACCESS DATA, CONTACT RIGHT OF WAY ENGINEERING AT THE DISTRICT OFFICE.

PROJECT NOTES:

56 INSTALL TYPE 15 STANDARD WITH 6' LUMINAIRE ARM AND BETA 200 W EQUIVALENT LUMINAIRE WITH PEU, MODEL #STR-LWY-3M-HT-06-D-UL-SV-700-R, OR APPROVED EQUAL.

57 2"C, 2#8 (120 V CITY LIGHTING), 1#10 G.

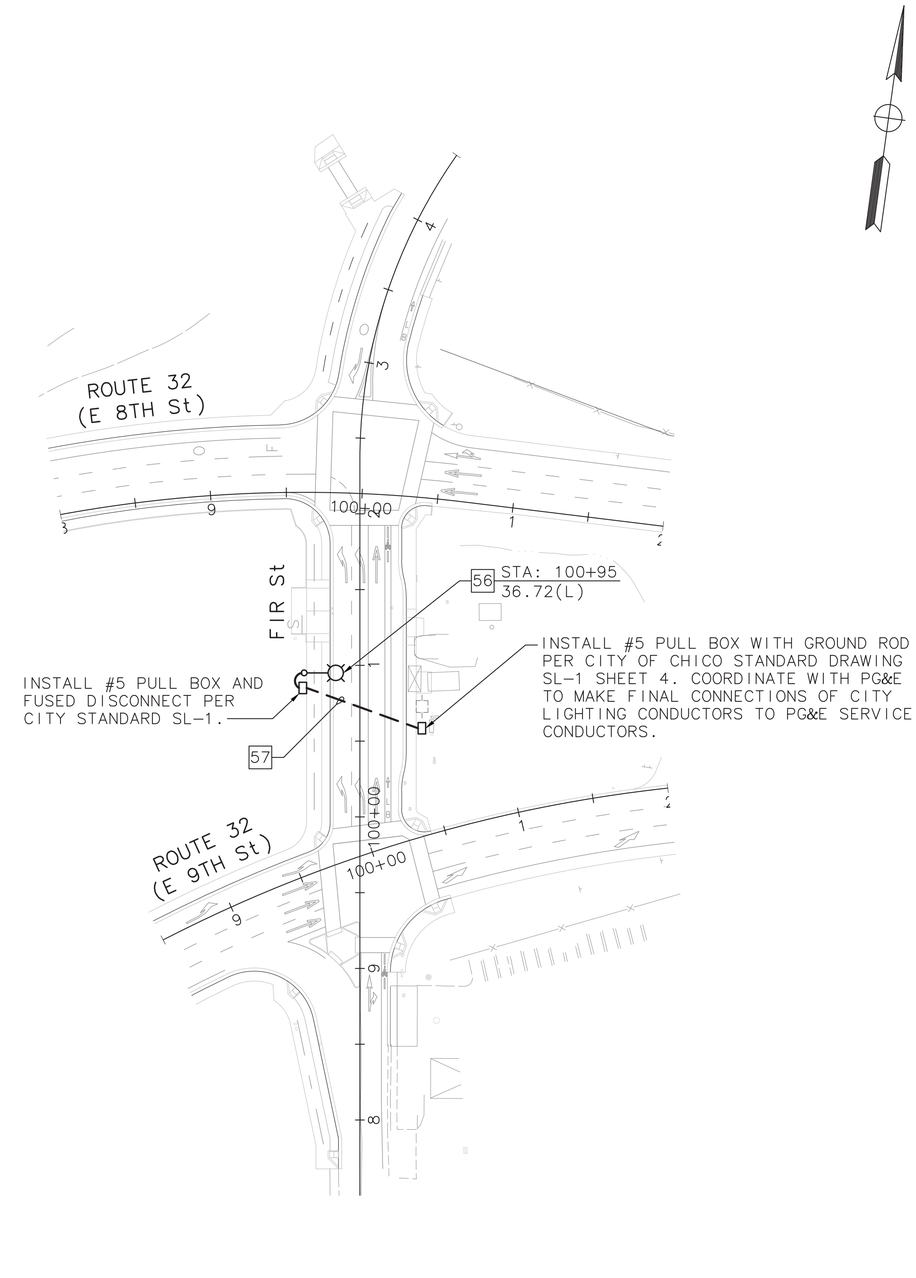

Dist	COUNTY	ROUTE	POST MILES TOTAL PROJECT	SHEET No.	TOTAL SHEETS
03	But	32	10.1/10.5	116	126

Kristin D. Calia 11/6/15
REGISTERED CIVIL ENGINEER DATE

November 13, 2015
PLANS APPROVAL DATE

REGISTERED PROFESSIONAL ENGINEER K. CALIA No. 62461 Exp. 9/30/17 CIVIL STATE OF CALIFORNIA

THE STATE OF CALIFORNIA OR ITS OFFICERS OR AGENTS SHALL NOT BE RESPONSIBLE FOR THE ACCURACY OR COMPLETENESS OF SCANNED COPIES OF THIS PLAN SHEET.

FEHR AND PEERS
2990 LAVA RIDGE COURT
SUITE 200
ROSEVILLE, CA 95661

CITY OF CHICO
CAPITAL PROJECT SERVICES
411 MAIN STREET
CHICO, CA 95927

STATE OF CALIFORNIA – DEPARTMENT OF TRANSPORTATION
Caltrans

CONSULTANT FUNCTIONAL SUPERVISOR: KRISTIN D. CALIA
CALCULATED-DESIGNED BY: M. JOHNSTONE
CHECKED BY: K. CALIA
REVISED BY
DATE REVISED

LIGHTING (CITY STREET)

SCALE: 1"=50'

E-35

APPROVED FOR ELECTRICAL WORK ONLY

LAST REVISION 00-00-00
DATE PLOTTED => $DATE
TIME PLOTTED => $TIME

BORDER LAST REVISED 7/2/2010
USERNAME => $USER
DGN FILE => $REQUEST
RELATIVE BORDER SCALE IS IN INCHES 0 1 2 3
UNIT 0000
PROJECT NUMBER & PHASE 0313000246

Dist	COUNTY	ROUTE	POST MILES TOTAL PROJECT	SHEET No.	TOTAL SHEETS
03	But	32	10.1 to 10.5	117	126

LICENSED LANDSCAPE ARCHITECT — DATE 11-6-15

PLANS APPROVAL DATE 11-13-15

REGISTERED LANDSCAPE ARCHITECT — BRIAN D. FIRTH #2752 — EXP. 06-17 — STATE OF CALIFORNIA

THE STATE OF CALIFORNIA OR ITS OFFICERS OR AGENTS SHALL NOT BE RESPONSIBLE FOR THE ACCURACY OR COMPLETENESS OF SCANNED COPIES OF THIS PLAN SHEET.

BRIAN FIRTH LANDSCAPE ARCHITECT, INC.
627 BROADWAY, SUITE 220
CHICO, CALIFORNIA 95928

CITY OF CHICO
CAPITAL PROJECT SERVICES
411 MAIN STREET
CHICO, CA 95927

03 BUT 32 10.3 6 13

John F. Hawes 1825

April 19, 1982

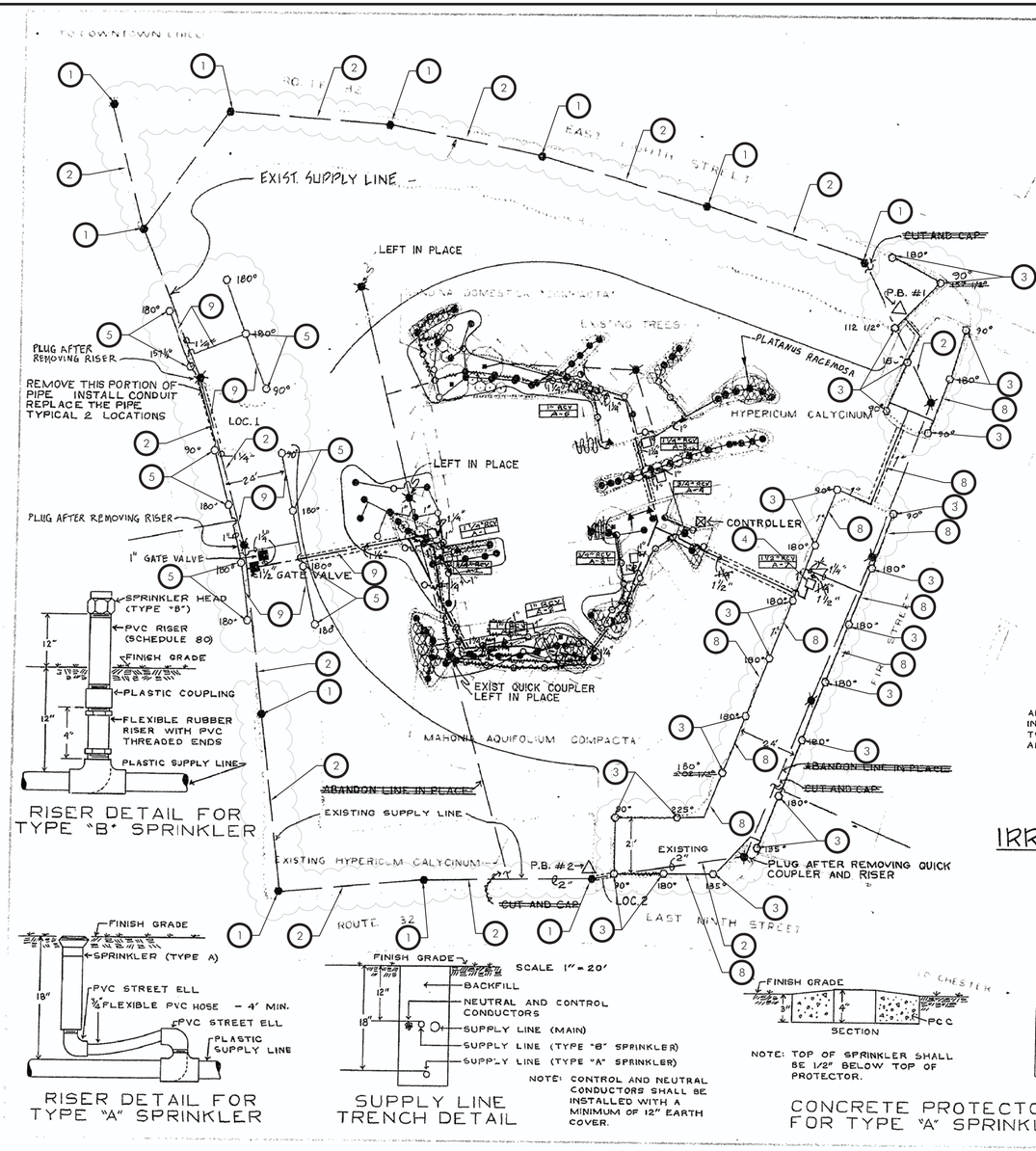

RISER DETAIL FOR TYPE "B" SPRINKLER

RISER DETAIL FOR TYPE "A" SPRINKLER

NOTE: CONTROL AND NEUTRAL CONDUCTORS SHALL BE INSTALLED WITH A MINIMUM OF 12" EARTH COVER.

SUPPLY LINE TRENCH DETAIL

NOTE: TOP OF SPRINKLER SHALL BE 1/2" BELOW TOP OF PROTECTOR.

CONCRETE PROTECTORS FOR TYPE "A" SPRINKLER

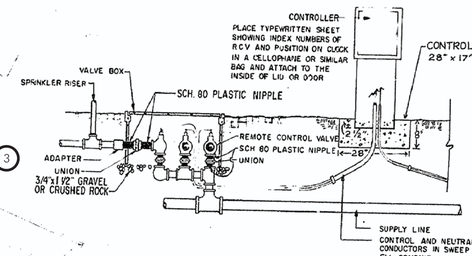

DIAGRAM FOR REMOTE CONTROL VALVE

NOTES:

1. AUTOMATIC CONTROL VALVES SHALL BE INSTALLED ONE FOOT FROM PAVEMENT.
2. SPRINKLER TYPE "A" SHALL BE PLACED ONE FOOT FROM EDGE OF PAVEMENT.
3. 3 CONTROL AND 1 NEUTRAL CONDUCTOR TO TERMINATE AT PULL BOX NUMBER 1. 2 CONTROL AND NEUTRAL CONDUCTOR TO TERMINATE AT PULL BOX NUMBER 2.
4. CONDUITS SHALL BE INSTALLED AT LEAST 12" BELOW THE FINISH GRADE, MEASURED TO THE TOP OF THE CONDUIT.
5. TYPE "A" SPRINKLERS SHALL HAVE CONCRETE PROTECTORS.
6. ALL PIPE IS 3/4" UNLESS OTHERWISE NOTED

IRRIGATION QUANTITIES

26	EA	TYPE "A" SPRINKLERS
90	EA	TYPE "B" SPRINKLERS
1220	LF	3/4" PLASTIC PIPE SUPPLY LINE (F)
70	LF	1" PLASTIC PIPE SUPPLY LINE (F)
330	LF	1 1/4" PLASTIC PIPE SUPPLY LINE (F)
80	LF	1 1/2" PLASTIC PIPE SUPPLY LINE (F)
1	EA	1 1/2" GATE VALVE
3	EA	3/4" ELECTRIC REMOTE CONTROL VALVE
2	EA	1" ELECTRIC REMOTE CONTROL VALVE
1	EA	1 1/4" ELECTRIC REMOTE CONTROL VALVE
1	EA	1 1/2" ELECTRIC REMOTE CONTROL VALVE
1	EA	12 STATION ELECTRIC AUTOMATIC CONTROLLER
200	LF	4" ASBESTOS-CEMENT PIPE CONDUIT

AS BUILT PLANS
Contract No. 03-262004
Comment: 3-27-03
Joe Young Res. Engr.

ALL SPRINKLERS SHALL BE INSTALLED A MINIMUM OF TWO FEET FROM TREES AND SHRUBS.

IRRIGATION LEGEND

- SPRINKLER TYPE "A"
- SPRINKLER TYPE "B" (1/4)
- SPRINKLER TYPE "B" (FULL)
- SPRINKLER TYPE "B" (3/4)
- SPRINKLER TYPE "B" (HALF)
- SPRINKLER TYPE "B" (CENTER STRIP)
- EXISTING QUICK COUPLER
- EXISTING QUICK COUPLER AND RISER TO BE REMOVED
- EXISTING SUPPLY LINE
- PLASTIC PIPE SUPPLY LINE
- PLASTIC PIPE SUPPLY LINE
- GATE VALVE IN VALVE BOX
- REMOTE CONTROL VALVE IN VALVE BOX
- 12 STATION ELECTRIC AUTOMATIC CONTROLLER
- NUMBER 5 PULL BOX
- 4" ASBESTOS-CEMENT PIPE CONDUIT
- 1" RCV / A-2 — REMOTE CONTROL VALVE SIZE / REMOTE CONTROL VALVE NUMBER

SPRINKLER SCHEDULE

SYMBOL	○	●	◐	◯	▲	⊘
SPRINKLER TYPE	A	B	B	B	B	B
RADIUS	21'	11'	11'	11'	4' x 30'	11'
DISCHARGE (GPM)	*	2.9	2.2	1.8	1.0	1.0
OPERATING PRESSURE (PSI)	35	15	15	15	15	15
SPRAY PATTERN	VARIES **	FULL	THREE-QUARTER	HALF	CENTER STRIP	ONE-QUARTER
FLEXIBLE RISER BELOW GROUND	X	X	X	X	X	X
RISER CONNECTION (IPS)	3/4"	1/2"	1/2"	1/2"	1/2"	1/2"
MATERIAL	PLASTIC	BRASS	BRASS	BRASS	BRASS	BRASS
PVC RISER ABOVE GROUND		12"	12"	12"	12"	12"
POP-UP HEIGHT	12"					
REMARKS	STREAM ROTOR POP-UP	SHRUB SPRAY	SHRUB SPRAY	SHRUB SPRAY	SHRUB SPRAY	SHRUB SPRAY

* VARIES ACCORDING TO PATTERN — ** SEE IRRIGATION LAYOUT

03357-262001

DEMOLITION NOTES

1. THIS DEMOLITION PLAN IS BASED UPON 'AS-BUILT' DRAWINGS PROVIDED BY CALTRANS DATED APRIL 19, 1982 AND OCTOBER 18, 2013.
2. CONTRACTOR SHALL VERIFY FIELD CONDITIONS PRIOR TO THE START OF DEMOLITION ACTIVITIES.
3. THE CONTRACTOR IS RESPONSIBLE FOR MAINTAINING IRRIGATION TO EXISTING LANDSCAPE TO REMAIN.
4. THE CONTRACTOR IS RESPONSIBLE FOR PROVIDING 'AS-BUILT' DRAWINGS. 'AS-BUILT' DRAWINGS SHALL DEPICT THE LOCATIONS OF ALL SPRINKLER HEADS, REMOTE CONTROL VALVES, QUICK COUPLER VALVES, AND NON-PRESSURE LATERAL AND PRESSURE MAINLINE PIPE LOCATIONS. DRAWINGS SHALL BE CLEARLY LEGIBLE AND DRAWN TO SCALE.

DEMOLITION LEGEND

SYMBOL	DESCRIPTION	REMARKS
1	EXISTING QUICK COUPLER VALVE	CONTRACTOR TO RELOCATE TO NEW BACK OF WALK PER IRRIGATION PLAN. SEE CIVIL ENGINEER'S PLAN FOR ADDITIONAL INFORMATION.
2	EXISTING IRRIGATION PRESSURE MAINLINE PIPING	RELOCATE AS REQUIRED TO ACCOMMODATE HARDSCAPE IMPROVEMENTS. SEE CIVIL ENGINEER'S PLANS FOR ADDITIONAL INFORMATION. REPLACE ANY PIPING OR FITTINGS THAT IS/ ARE DAMAGED.
3	EXISTING IRRIGATION SPRINKLERS	REMOVE AND AND RETURN SPRINKLER AND CONCRETE SPRINKLER BLOCKS TO CALTRANS. DISPOSE OF DAMAGED OR BROKEN SPRINKLERS OR CONCRETE SPRINKLER BLOCK IS OFF-SITE.
4	EXISTING IRRIGATION REMOTE CONTROL VALVE.	REMOVE AND AND RETURN TO CALTRANS. RETAIN AND PROTECT PIPING AND WIRING AT EXISTING REMOTE CONTROL VALVE FOR RE-USE IN SUPPLYING NEW CONTROL ZONE KIT.
5	EXISTING IRRIGATION SPRINKLERS	ADJUST SPRINKLER HEAD LOCATIONS AND SPRAY RADII AS REQUIRED TO ACCOMMODATE HARDSCAPE IMPROVEMENTS. RELOCATE EXISTING CONCRETE SPRINKLER BLOCKS TO NEW SPRAY HEAD LOCATIONS. SEE CIVIL ENGINEER'S PLANS FOR ADDITIONAL INFORMATION.
6	EXISTING IRRIGATION REMOTE CONTROL VALVE.	RETAIN AND PROTECT
8	EXISTING IRRIGATION LATERAL PIPING	REMOVE AND DISPOSE OF OFF SITE.
9	RELOCATE EXISTING IRRIGATION PIPING	RELOCATE AS REQUIRED TO ACCOMMODATE HARDSCAPE IMPROVEMENTS. SEE CIVIL ENGINEER'S PLANS FOR ADDITIONAL INFORMATION. REPLACE ANY PIPING OR FITTINGS THAT THAT IS/ ARE DAMAGED.
10	EXISTING IRRIGATION LATERAL PIPING	RETAIN AND PROTECT
11	EXISTING IRRIGATION PRESSURE MAINLINE PIPING	RETAIN AND PROTECT
12	EXISTING PLASTIC BUBBLER	TYPICAL (APPROX. 90 TOTAL- FIELD VERIFY). REMOVE AND DISPOSE OF OFF-SITE. CAP LATERAL LINE SO AS TO MAINTAIN FUNCTIONALITY.
13	EXISTING IRRIGATION REMOTE CONTROL VALVE.	REMOVE AND AND RETURN TO CALTRANS. CAP AT MAINLINE TO MAINTAIN FUNCTION OF IRRIGATION SYSTEM.

DRAWING DEPICTED IS THE CALTRANS 'AS-BUILT' CONDITIONS DRAWING DATED APRIL 19, 1982 FOR USE WITH DEMOLITION LEGEND, THIS SHEET

NORTH

SCALE: N.T.S.

HIGHWAY 32-PHASE 2

LANDSCAPE DEMOLITION PLAN

SHEET LS-1.0

LAST REVISION: DATE PLOTTED => $DATE
00-00-00 TIME PLOTTED => $TIME

AS BUILT PLANS
Contract No. 03-262004
Date Contracted 3-27-03
Document No.

I HEREBY CERTIFY THAT THIS IS A TRUE AND ACCURATE COPY OF THE ABOVE DOCUMENT TAKEN UNDER MY DIRECTION AND CONTROL ON THIS DATE IN SACRAMENTO, CALIFORNIA PURSUANT TO AUTHORIZATION BY THE DIRECTOR OF TRANSPORTATION.
DATE 9/6/84 SIGNATURE Donald Blackford TITLE SUPERVISOR OF MICROFILM SERVICES

MICROFILM - STATE OF CALIFORNIA - DEPARTMENT OF TRANSPORTATION - MICROFILM

STATE OF CALIFORNIA — DEPARTMENT OF TRANSPORTATION — CONSULTANT FUNCTIONAL SUPERVISOR: BRIAN FIRTH
CALCULATED-DESIGNED BY: B. FIRTH
CHECKED BY: B. FIRTH
REVISED BY / DATE REVISED

BORDER LAST REVISED 8-8-2013 | USERNAME => $USER | DGN FILE => $REQUEST | RELATIVE BORDER SCALE IS IN INCHES 0 1 2 3 | UNIT 0000 | PROJECT NUMBER & PHASE 0313000246

tbell c37870t03 23-Apr-1997 09:25 /project/PSE/c37870/c37870t03.dgn

DIST	COUNTY	ROUTE	POST MILES TOTAL PROJECT	SHEET No.	TOTAL SHEETS
03	But	32	10.3	11	13

REGISTERED LANDSCAPE ARCHITECT

10-18-93
PLANS APPROVAL DATE

REGISTERED LANDSCAPE ARCHITECT JAMES D. ADAMS No. 4556 Exp. 4-30-94 STATE OF CALIFORNIA

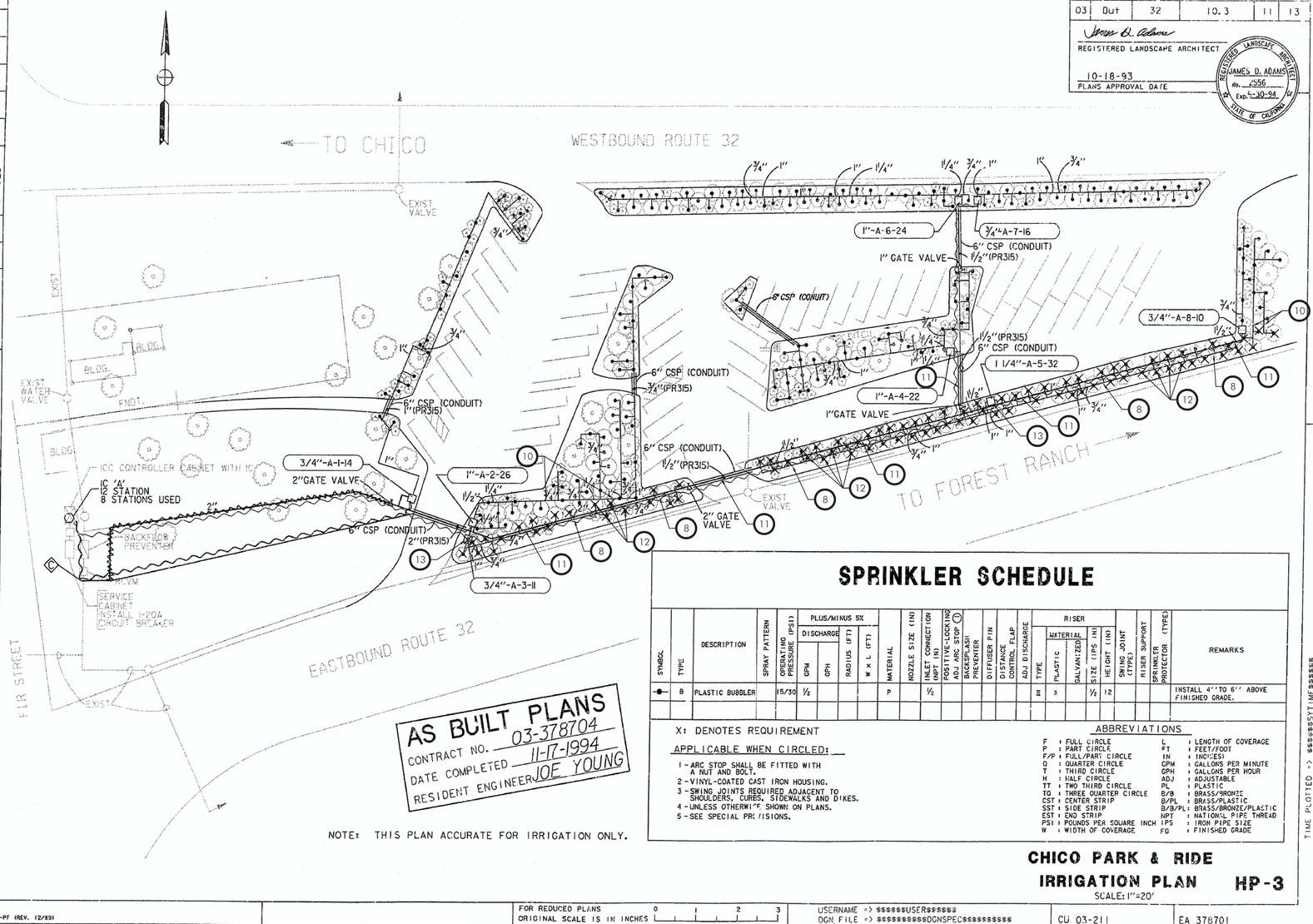

SPRINKLER SCHEDULE

SYMBOL	TYPE	DESCRIPTION	SPRAY PATTERN	OPERATING PRESSURE (PSI)	PLUS/MINUS 5% DISCHARGE GPM	DISCHARGE GPH	RADIUS (FT)	W x L (FT)	MATERIAL	NOZZLE SIZE (IN)	INLET CONNECTION SIZE (IN)	POSITIVE-LOCKING ADJ ARC STOP ①	BACKSPLASH PREVENTER	DIFFUSER PIN	DISTANCE CONTROL FLAP	ADJ DISCHARGE	RISER TYPE	RISER MATERIAL PLASTIC	RISER MATERIAL GALVANIZED	RISER SIZE (IPS IN)	RISER HEIGHT (IN)	SWING JOINT (TYPE)	RISER SUPPORT	SPRINKLER PROTECTOR (TYPE)	REMARKS
●	B	PLASTIC BUBBLER		15/30	½				P		½						II	X		½	12				INSTALL 4" TO 6" ABOVE FINISHED GRADE.

X: DENOTES REQUIREMENT

APPLICABLE WHEN CIRCLED:

1 - ARC STOP SHALL BE FITTED WITH A NUT AND BOLT.
2 - VINYL-COATED CAST IRON HOUSING.
3 - SWING JOINTS REQUIRED ADJACENT TO SHOULDERS, CURBS, SIDEWALKS AND DIKES.
4 - UNLESS OTHERWISE SHOWN ON PLANS.
5 - SEE SPECIAL PROVISIONS.

ABBREVIATIONS

F	: FULL CIRCLE	L	: LENGTH OF COVERAGE
P	: PART CIRCLE	FT	: FEET/FOOT
F/P	: FULL/PART CIRCLE	IN	: INCHES)
Q	: QUARTER CIRCLE	GPM	: GALLONS PER MINUTE
T	: THIRD CIRCLE	GPH	: GALLONS PER HOUR
H	: HALF CIRCLE	ADJ	: ADJUSTABLE
TT	: TWO THIRD CIRCLE	PL	: PLASTIC
TQ	: THREE QUARTER CIRCLE	B/B	: BRASS/BRONZE
CST	: CENTER STRIP	B/PL	: BRASS/PLASTIC
SST	: SIDE STRIP	B/B/PL	: BRASS/BRONZE/PLASTIC
EST	: END STRIP	NPT	: NATIONAL PIPE THREAD
PSI	: POUNDS PER SQUARE INCH	IPS	: IRON PIPE SIZE
W	: WIDTH OF COVERAGE	FG	: FINISHED GRADE

AS BUILT PLANS
CONTRACT NO. 03-378704
DATE COMPLETED 11-17-1994
RESIDENT ENGINEER JOE YOUNG

NOTE: THIS PLAN ACCURATE FOR IRRIGATION ONLY.

CHICO PARK & RIDE
IRRIGATION PLAN HP-3
SCALE: 1"=20'

DIST	COUNTY	ROUTE	POST MILES TOTAL PROJECT	SHEET No.	TOTAL SHEETS
03	But	32	10.1 to 10.5	118	126

LICENSED LANDSCAPE ARCHITECT — 11-6-15 DATE

11-13-15
PLANS APPROVAL DATE

REGISTERED LANDSCAPE ARCHITECT BRIAN D. FIRTH #2752 STATE OF CALIFORNIA EXP. 06-17

THE STATE OF CALIFORNIA OR ITS OFFICERS OR AGENTS SHALL NOT BE RESPONSIBLE FOR THE ACCURACY OR COMPLETENESS OF SCANNED COPIES OF THIS PLAN SHEET.

BRIAN FIRTH LANDSCAPE ARCHITECT, INC.
627 BROADWAY, SUITE 220
CHICO, CALIFORNIA 95928

CITY OF CHICO
CAPITAL PROJECT SERVICES
411 MAIN STREET
CHICO, CA 95927

DEMOLITION NOTES

1. THIS DEMOLITION PLAN IS BASED UPON 'AS-BUILT' DRAWINGS PROVIDED BY CALTRANS DATED APRIL 19, 1982 AND OCTOBER 18, 2013.
2. CONTRACTOR SHALL VERIFY FIELD CONDITIONS PRIOR TO THE START OF DEMOLITION ACTIVITIES.
3. THE CONTRACTOR IS RESPONSIBLE FOR MAINTAINING IRRIGATION TO EXISTING LANDSCAPE TO REMAIN.
4. THE CONTRACTOR IS RESPONSIBLE FOR PROVIDING 'AS-BUILT' DRAWINGS. 'AS-BUILT' DRAWINGS SHALL DEPICT THE LOCATIONS OF ALL SPRINKLER HEADS, REMOTE CONTROL VALVES, QUICK COUPLER VALVES, AND NON-PRESSURE LATERAL AND PRESSURE MAINLINE PIPE LOCATIONS. DRAWINGS SHALL BE CLEARLY LEGIBLE AND DRAWN TO SCALE.

DEMOLITION LEGEND

SYMBOL	DESCRIPTION	REMARKS
①	EXISTING QUICK COUPLER VALVE	CONTRACTOR TO RELOCATE TO NEW BACK OF WALK PER IRRIGATION PLAN. SEE CIVIL ENGINEER'S PLAN FOR ADDITIONAL INFORMATION.
②	EXISTING IRRIGATION PRESSURE MAINLINE PIPING	RELOCATE AS REQUIRED TO ACCOMMODATE HARDSCAPE IMPROVEMENTS. SEE CIVIL ENGINEER'S PLANS FOR ADDITIONAL INFORMATION. REPLACE ANY PIPING OR FITTINGS THAT IS/ ARE DAMAGED.
③	EXISTING IRRIGATION SPRINKLERS	REMOVE AND AND RETURN SPRINKLER AND CONCRETE SPRINKLER BLOCKS TO CALTRANS. DISPOSE OF DAMAGED OR BROKEN SPRINKLERS OR CONCRETE SPRINKLER BLOCK IS OFF-SITE.
④	EXISTING IRRIGATION REMOTE CONTROL VALVE.	REMOVE AND AND RETURN TO CALTRANS. RETAIN AND PROTECT PIPING AND WIRING AT EXISTING REMOTE CONTROL VALVE FOR RE-USE IN SUPPLYING NEW CONTROL ZONE KIT.
⑤	EXISTING IRRIGATION SPRINKLERS	ADJUST SPRINKLER HEAD LOCATIONS AND SPRAY RADII AS REQUIRED TO ACCOMMODATE HARDSCAPE IMPROVEMENTS. RELOCATE EXISTING CONCRETE SPRINKLER BLOCKS TO NEW SPRAY HEAD LOCATIONS. SEE CIVIL ENGINEER'S PLANS FOR ADDITIONAL INFORMATION.
⑥	EXISTING IRRIGATION REMOTE CONTROL VALVE.	RETAIN AND PROTECT
⑨	EXISTING IRRIGATION LATERAL PIPING	REMOVE AND DISPOSE OF OFF SITE.
⑦	RELOCATE EXISTING IRRIGATION PIPING	RELOCATE AS REQUIRED TO ACCOMMODATE HARDSCAPE IMPROVEMENTS. SEE CIVIL ENGINEER'S PLANS FOR ADDITIONAL INFORMATION. REPLACE ANY PIPING OR FITTINGS THAT THAT IS/ ARE DAMAGED.
⑩	EXISTING IRRIGATION LATERAL PIPING	RETAIN AND PROTECT
⑪	EXISTING IRRIGATION PRESSURE MAINLINE PIPING	RETAIN AND PROTECT
⑫	EXISTING PLASTIC BUBBLER	TYPICAL (APPROX. 90 TOTAL- FIELD VERIFY). REMOVE AND DISPOSE OF OFF-SITE. CAP LATERAL LINE SO AS TO MAINTAIN FUNCTIONALITY.
⑬	EXISTING IRRIGATION REMOTE CONTROL VALVE.	REMOVE AND AND RETURN TO CALTRANS. CAP AT MAINLINE TO MAINTAIN FUNCTION OF IRRIGATION SYSTEM.

DRAWING DEPICTED IS THE CALTRANS 'AS-BUILT' CONDITIONS DRAWING DATED OCTOBER 18, 1993 FOR USE WITH DEMOLITION LEGEND, THIS SHEET

NORTH

SCALE: N.T.S.

HIGHWAY 32-
PHASE 2

LANDSCAPE
DEMOLITION
PLAN

SHEET LS-1.1

LAST REVISION: DATE PLOTTED => $DATE
00-00-00 TIME PLOTTED => $TIME

TIME PLOTTED => $$$$$$$TIME$$$$$$

PROJECT LANDSCAPE ARCHITECT: PHIL BLALOCK
CALCULATED/DESIGNED BY: B. FIRTH
CHECKED BY: B. FIRTH
REVISED BY / DATE REVISED:

STATE OF CALIFORNIA - DEPARTMENT OF TRANSPORTATION
Caltrans LANDSCAPE ARCHITECTURE
CONSULTANT FUNCTIONAL SUPERVISOR: BRIAN FIRTH
CALCULATED-DESIGNED BY
CHECKED BY
STATE OF CALIFORNIA - DEPARTMENT OF TRANSPORTATION Caltrans

FORM DC-OE-98-PF (REV. 12/89)

FOR REDUCED PLANS ORIGINAL SCALE IS IN INCHES 0 1 2 3

USERNAME => $$$$$$USER$$$$$$
DGN FILE => $$$$$$$$$$DGNSPEC$$$$$$$$$$

CU 03-211

EA 378701

tbell c37870t03 23-Apr-1997 09:25 /project/PSE/c37870/c37870t03.dgn

BORDER LAST REVISED 8-8-2013

USERNAME =>$USER
DGN FILE => $REQUEST

RELATIVE BORDER SCALE IS IN INCHES 0 1 2 3

UNIT 0000

PROJECT NUMBER & PHASE 0313000246

Dist	COUNTY	ROUTE	POST MILES TOTAL PROJECT	SHEET No.	TOTAL SHEETS
03	But	32	10.1 to 10.5	119	126

LICENSED LANDSCAPE ARCHITECT 11-6-15 DATE

11-13-15
PLANS APPROVAL DATE

REGISTERED LANDSCAPE ARCHITECT BRIAN D. FIRTH #2752 EXP. 06-17 STATE OF CALIFORNIA

THE STATE OF CALIFORNIA OR ITS OFFICERS OR AGENTS SHALL NOT BE RESPONSIBLE FOR THE ACCURACY OR COMPLETENESS OF SCANNED COPIES OF THIS PLAN SHEET.

BRIAN FIRTH LANDSCAPE ARCHITECT, INC.
627 BROADWAY, SUITE 220
CHICO, CALIFORNIA 95928

CITY OF CHICO
CAPITAL PROJECT SERVICES
411 MAIN STREET
CHICO, CA 95927

PLAN LEGEND

SYMBOL	DESCRIPTION	REMARKS	DETAIL
1	NOT USED		--
2	APPROXIMATE LIMITS OF GRADING	SHOWN FOR REFERENCE ONLY. SEE PLANS BY MARK THOMAS COMPANY FOR ADDITIONAL INFORMATION.	--
3	LIMIT OF MULCH	SEE PLANTING NOTES, SPECIAL PROVISIONS, AND CAL TRANS STANDARDS FOR ADDITIONAL INFORMATION.	--

PLANT LEGEND

SYMBOL	DESCRIPTION	CONTAINER SIZE	QUANTITY	REMARKS
G-1	HYPERICUM CALYCIMUM ST. JOHN'S WORT (GROUNDCOVER)	LINERS	7,630 SF (APPROXIMATELY 3,916 LINER PLANTINGS).	PLANT AT 18" O.C. IN EQUIDISTANT TRIANGULAR SPACING- SEE GROUNDCOVER DETAIL, SHEET L-2.0. CULTIVATE PLANTING AREAS AND APPLY 6 CUBIC YARDS OF SOIL AMENDMENT PER 1000 SQUARE FEET TYPICAL ALL HYPERICUM PLANTING AREAS.
S-1	ROSA X 'NOARE' P.P.# 11308 FLOWER CARPET® RED GROUNDCOVER ROSE	1 GAL.	325	PLANT AT 36" O.C. IN EQUIDISTANT TRIANGULAR SPACING- SEE SHRUB PLANTING DETAIL, SHEET L-2.1.
S-2	CERCIS OCCIDENTALIS WESTERN REDBUD	5 GAL.	5	SEE SHRUB PLANTING DETAIL, SHEET L-2.1.
T-1	QUERCUS LOBATA VALLEY OAK	15 GAL.	3	SEE TREE PLANTING DETAIL, SHEET L-2.3.

SYMBOL
5 ← QUANTITY
S-3 ← PLANT DESIGNATION

PLANTING NOTES

1. APPLY SOIL AMENDMENT AT A RATE OF 6 CUBIC YARDS PER 1000 SQUARE FEET AND SLOW RELEASE FERTILIZER AT A RATE OF 7 POUNDS PER 10000 SQUARE FEET. INSTALL 2 PACKET FERTILIZERS AT EACH 1 AND 5 GALLON SHRUB AND 3 PACKET FERTILIZERS AT EACH 15 GALLON TREE.
2. SEE 'LANDSCAPE' SECTION OF THE CURRENT (2010) CALTRANS STANDARD SPECIFICATIONS AND PROJECT SPECIAL PROVISIONS FOR ADDITIONAL INFORMATION
3. SEE PLANS BY MARK THOMAS & COMPANY FOR ADDITIONAL INFORMATION.

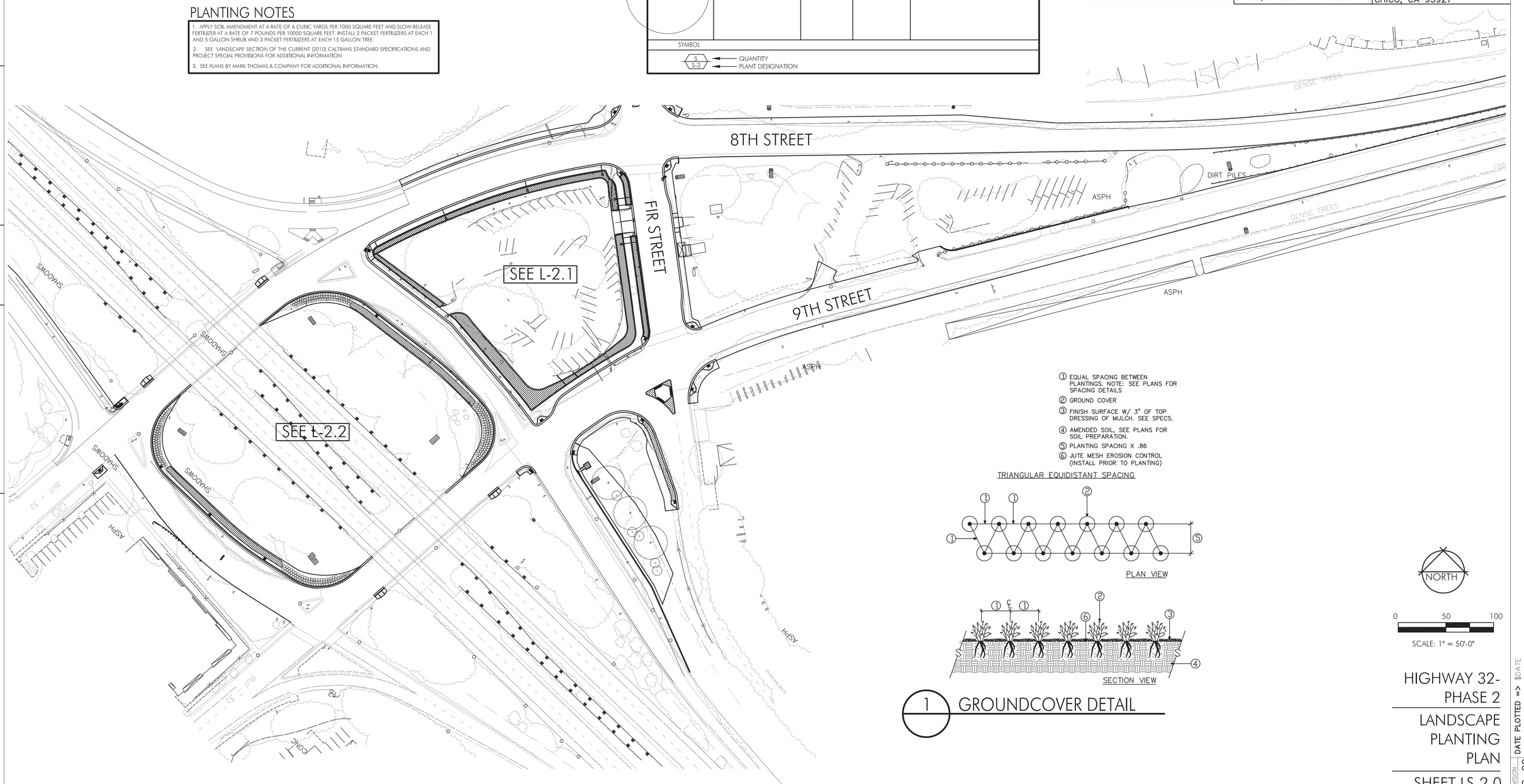

① EQUAL SPACING BETWEEN PLANTINGS. NOTE: SEE PLANS FOR SPACING DETAILS
② GROUND COVER
③ FINISH SURFACE W/ 3" OF TOP DRESSING OF MULCH. SEE SPECS.
④ AMENDED SOIL, SEE PLANS FOR SOIL PREPARATION.
⑤ PLANTING SPACING X .86
⑥ JUTE MESH EROSION CONTROL (INSTALL PRIOR TO PLANTING)

TRIANGULAR EQUIDISTANT SPACING

PLAN VIEW

SECTION VIEW

1 GROUNDCOVER DETAIL

NORTH

0 50 100
SCALE: 1" = 50'-0"

HIGHWAY 32-PHASE 2
LANDSCAPE PLANTING PLAN
SHEET LS-2.0

STATE OF CALIFORNIA – DEPARTMENT OF TRANSPORTATION
Caltrans®
CONSULTANT FUNCTIONAL SUPERVISOR: BRIAN FIRTH
CALCULATED-DESIGNED BY: B. FIRTH/ JBB
CHECKED BY: B. FIRTH
REVISED BY
DATE REVISED

LAST REVISION 00-00-00
DATE PLOTTED => $DATE
TIME PLOTTED => $TIME

PLANT LEGEND

SYMBOL		DESCRIPTION	CONTAINER SIZE	QUANTITY	REMARKS
	G-1	HYPERICUM CALYCIMUM ST. JOHN'S WORT (GROUNDCOVER)	LINERS	7,630 SF (APPROXIMATELY 3,916 LINER PLANTINGS).	PLANT AT 18" O.C. IN EQUIDISTANT TRIANGULAR SPACING- SEE GROUNDCOVER DETAIL, SHEET L-2.0. CULTIVATE PLANTING AREAS AND APPLY 6 CUBIC YARDS OF SOIL AMENDMENT PER 1000 SQUARE FEET TYPICAL ALL HYPERICUM PLANTING AREAS.
○	S-1	ROSA X 'NOARE' P.P.# 11308 FLOWER CARPET® RED GROUNDCOVER ROSE	1 GAL.	325	PLANT AT 36" O.C. IN EQUIDISTANT TRIANGULAR SPACING- SEE SHRUB PLANTING DETAIL, SHEET L-2.1.
+	S-2	CERCIS OCCIDENTALIS WESTERN REDBUD	5 GAL.	5	SEE SHRUB PLANTING DETAIL, SHEET L-2.1.
*	T-1	QUERCUS LOBATA VALLEY OAK	15 GAL.	3	SEE TREE PLANTING DETAIL, SHEET L-2.3.

SYMBOL

5 / S-3 — QUANTITY / PLANT DESIGNATION

PLANTING NOTES

1. APPLY SOIL AMENDMENT AT A RATE OF 6 CUBIC YARDS PER 1000 SQUARE FEET AND SLOW RELEASE FERTILIZER AT A RATE OF 7 POUNDS PER 10000 SQUARE FEET. INSTALL 2 PACKET FERTILIZERS AT EACH 1 AND 5 GALLON SHRUB AND 3 PACKET FERTILIZERS AT EACH 15 GALLON TREE.
2. SEE 'LANDSCAPE' SECTION OF THE CURRENT (2010) CALTRANS STANDARD SPECIFICATIONS AND PROJECT SPECIAL PROVISIONS FOR ADDITIONAL INFORMATION
3. SEE PLANS BY MARK THOMAS & COMPANY FOR ADDITIONAL INFORMATION.

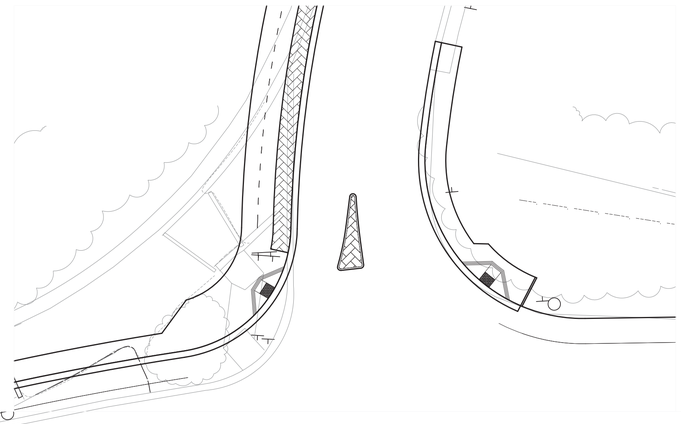

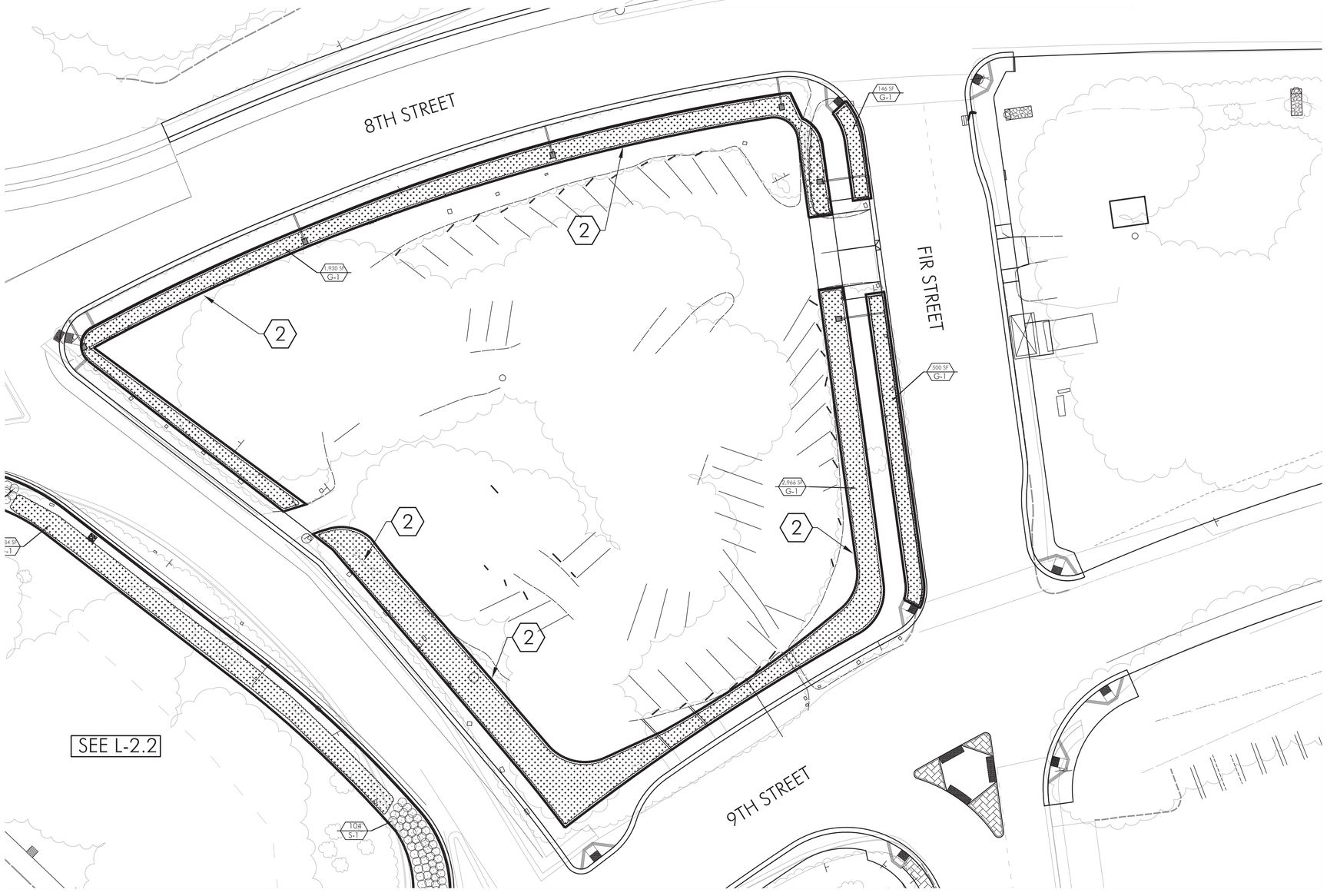

Dist	COUNTY	ROUTE	POST MILES TOTAL PROJECT	SHEET No.	TOTAL SHEETS
03	But	32	10.1 to 10.5	120	126

B. Firth — 11–6–15
LICENSED LANDSCAPE ARCHITECT — DATE

11–13–15
PLANS APPROVAL DATE

REGISTERED LANDSCAPE ARCHITECT — BRIAN D. FIRTH #2752 — EXP. 06–17 — STATE OF CALIFORNIA

THE STATE OF CALIFORNIA OR ITS OFFICERS OR AGENTS SHALL NOT BE RESPONSIBLE FOR THE ACCURACY OR COMPLETENESS OF SCANNED COPIES OF THIS PLAN SHEET.

BRIAN FIRTH LANDSCAPE ARCHITECT, INC.
627 BROADWAY, SUITE 220
CHICO, CALIFORNIA 95928

CITY OF CHICO
CAPITAL PROJECT SERVICES
411 MAIN STREET
CHICO, CA 95927

PLAN LEGEND

SYMBOL	DESCRIPTION	REMARKS	DETAIL
1	NOT USED		--
2	APPROXIMATE LIMITS OF GRADING	SHOWN FOR REFERENCE ONLY. SEE PLANS BY MARK THOMAS COMPANY FOR ADDITIONAL INFORMATION.	--
3	LIMIT OF MULCH	SEE PLANTING NOTES, SPECIAL PROVISIONS, AND CAL TRANS STANDARDS FOR ADDITIONAL INFORMATION.	--

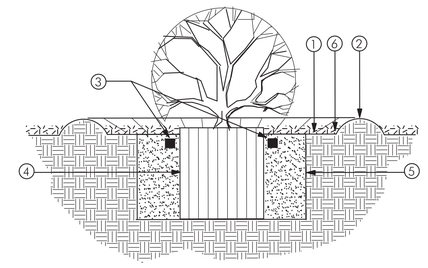

1. MULCH, AS PER SPECIFICATIONS
2. WATER RETENTION BERM, PROVIDE POSITIVE DRAINAGE AWAY FROM ROOTBALL
3. FERTILIZER TABLETS, AS PER SPECIFICATIONS
4. ROOT BALL, SET CROWN 1" ABOVE GRADE
5. PLANTING PIT TO BE TWICE THE DIAMETER OF ROOTBALL. REFER TO SPECIFICATIONS FOR BACKFILL MIX
6. FINISH GROUND COVER GRADE

1 SHRUB PLANTING

NORTH

0 20 40

SCALE: 1" = 20'-0"

HIGHWAY 32- PHASE 2

LANDSCAPE PLANTING PLAN

SHEET LS-2.1

LAST REVISION: DATE PLOTTED => $DATE
00–00–00 TIME PLOTTED => $TIME

REVISED BY | DATE REVISED
CALCULATED– DESIGNED BY: B. FIRTH/ JBB
CHECKED BY: B. FIRTH
CONSULTANT FUNCTIONAL SUPERVISOR: BRIAN FIRTH
STATE OF CALIFORNIA – DEPARTMENT OF TRANSPORTATION — Caltrans

BORDER LAST REVISED 8–8–2013
USERNAME => $USER
DGN FILE => $REQUEST
RELATIVE BORDER SCALE IS IN INCHES 0 1 2 3
UNIT 0000
PROJECT NUMBER & PHASE 0313000246

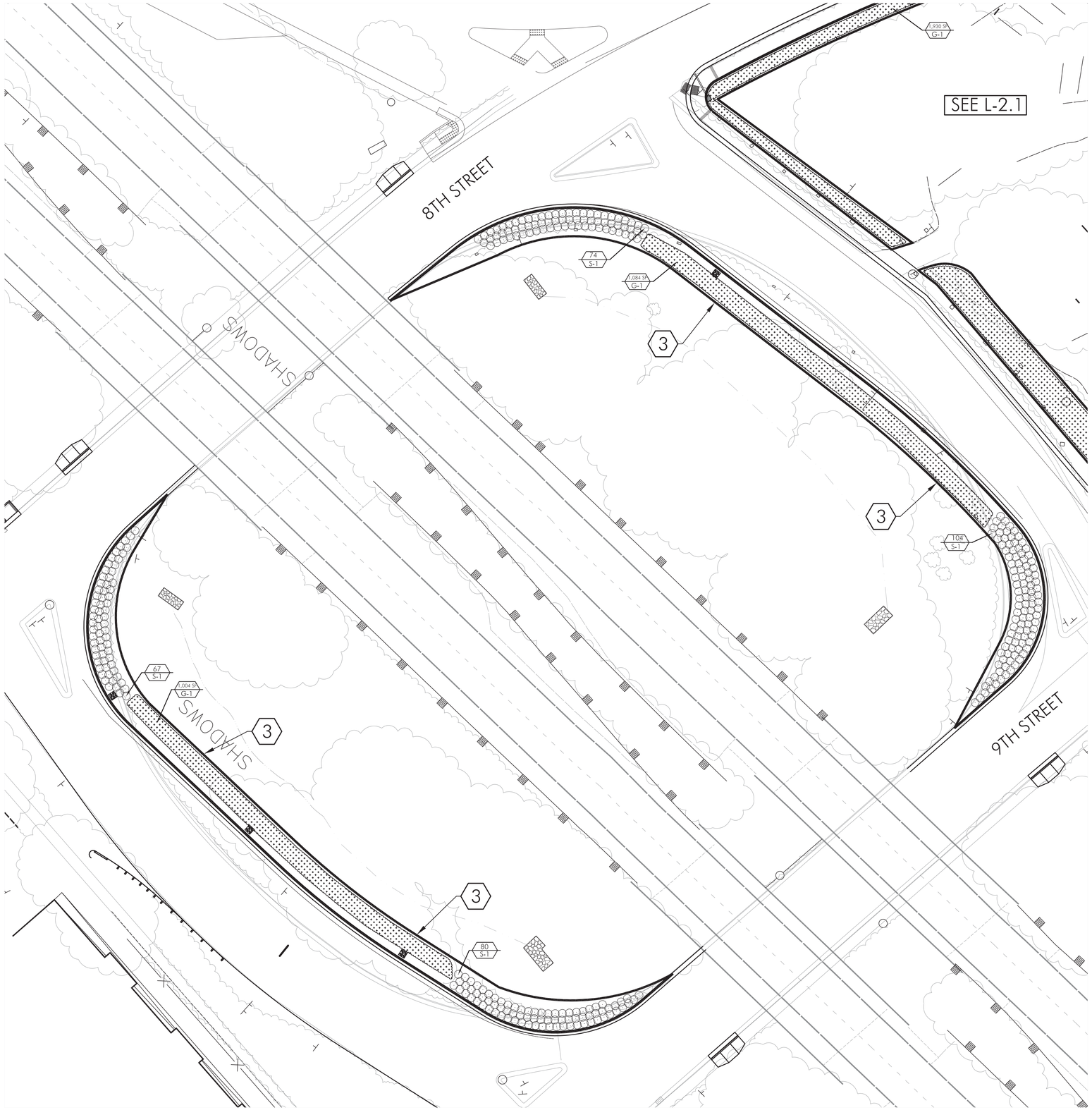

Dist	COUNTY	ROUTE	POST MILES TOTAL PROJECT	SHEET No.	TOTAL SHEETS
03	But	32	10.1 to 10.5	121	126

LICENSED LANDSCAPE ARCHITECT — 11-6-15 DATE

11-13-15
PLANS APPROVAL DATE

REGISTERED LANDSCAPE ARCHITECT · BRIAN D. FIRTH #2752 · EXP. 06-17 · STATE OF CALIFORNIA

THE STATE OF CALIFORNIA OR ITS OFFICERS OR AGENTS SHALL NOT BE RESPONSIBLE FOR THE ACCURACY OR COMPLETENESS OF SCANNED COPIES OF THIS PLAN SHEET.

BRIAN FIRTH LANDSCAPE ARCHITECT, INC.
627 BROADWAY, SUITE 220
CHICO, CALIFORNIA 95928

CITY OF CHICO
CAPITAL PROJECT SERVICES
411 MAIN STREET
CHICO, CA 95927

PLANTING NOTES

1. APPLY SOIL AMENDMENT AT A RATE OF 6 CUBIC YARDS PER 1000 SQUARE FEET AND SLOW RELEASE FERTILIZER AT A RATE OF 7 POUNDS PER 10000 SQUARE FEET. INSTALL 2 PACKET FERTILIZERS AT EACH 1 AND 5 GALLON SHRUB AND 3 PACKET FERTILIZERS AT EACH 15 GALLON TREE.
2. SEE 'LANDSCAPE' SECTION OF THE CURRENT (2010) CALTRANS STANDARD SPECIFICATIONS AND PROJECT SPECIAL PROVISIONS FOR ADDITIONAL INFORMATION
3. SEE PLANS BY MARK THOMAS & COMPANY FOR ADDITIONAL INFORMATION.

PLAN LEGEND

SYMBOL	DESCRIPTION	REMARKS	DETAIL
1	NOT USED		--
2	APPROXIMATE LIMITS OF GRADING	SHOWN FOR REFERENCE ONLY. SEE PLANS BY MARK THOMAS COMPANY FOR ADDITIONAL INFORMATION.	--
3	LIMIT OF MULCH	SEE PLANTING NOTES, SPECIAL PROVISIONS, AND CAL TRANS STANDARDS FOR ADDITIONAL INFORMATION.	--

PLANT LEGEND

SYMBOL		DESCRIPTION	CONTAINER SIZE	QUANTITY	REMARKS
	G-1	HYPERICUM CALYCIMUM ST. JOHN'S WORT (GROUNDCOVER)	LINERS	7,630 SF (APPROXIMATELY 3,916 LINER PLANTINGS).	PLANT AT 18" O.C. IN EQUIDISTANT TRIANGULAR SPACING- SEE GROUNDCOVER DETAIL, SHEET L-2.0. CULTIVATE PLANTING AREAS AND APPLY 6 CUBIC YARDS OF SOIL AMENDMENT PER 1000 SQUARE FEET TYPICAL ALL HYPERICUM PLANTING AREAS.
○	S-1	ROSA X 'NOARE' P.P.# 11308 FLOWER CARPET® RED GROUNDCOVER ROSE	1 GAL.	325	PLANT AT 36" O.C. IN EQUIDISTANT TRIANGULAR SPACING- SEE SHRUB PLANTING DETAIL, SHEET L-2.1.
+	S-2	CERCIS OCCIDENTALIS WESTERN REDBUD	5 GAL.	5	SEE SHRUB PLANTING DETAIL, SHEET L-2.1.
*	T-1	QUERCUS LOBATA VALLEY OAK	15 GAL.	3	SEE TREE PLANTING DETAIL, SHEET L-2.3.

SYMBOL

5 ← QUANTITY
S-3 ← PLANT DESIGNATION

NORTH

0 20 40

SCALE: 1" = 20'-0"

HIGHWAY 32- PHASE 2

LANDSCAPE PLANTING PLAN

SHEET LS-2.2

LAST REVISION — DATE PLOTTED => $DATE
00-00-00 TIME PLOTTED => $TIME

STATE OF CALIFORNIA — DEPARTMENT OF TRANSPORTATION — Caltrans®

CONSULTANT FUNCTIONAL SUPERVISOR: BRIAN FIRTH

CALCULATED-DESIGNED BY: B. FIRTH / JBB

CHECKED BY: B. FIRTH

DATE REVISED	REVISED BY

BORDER LAST REVISED 8-8-2013

USERNAME => $USER
DGN FILE => $REQUEST

RELATIVE BORDER SCALE IS IN INCHES 0 1 2 3

UNIT 0000

PROJECT NUMBER & PHASE 0313000246

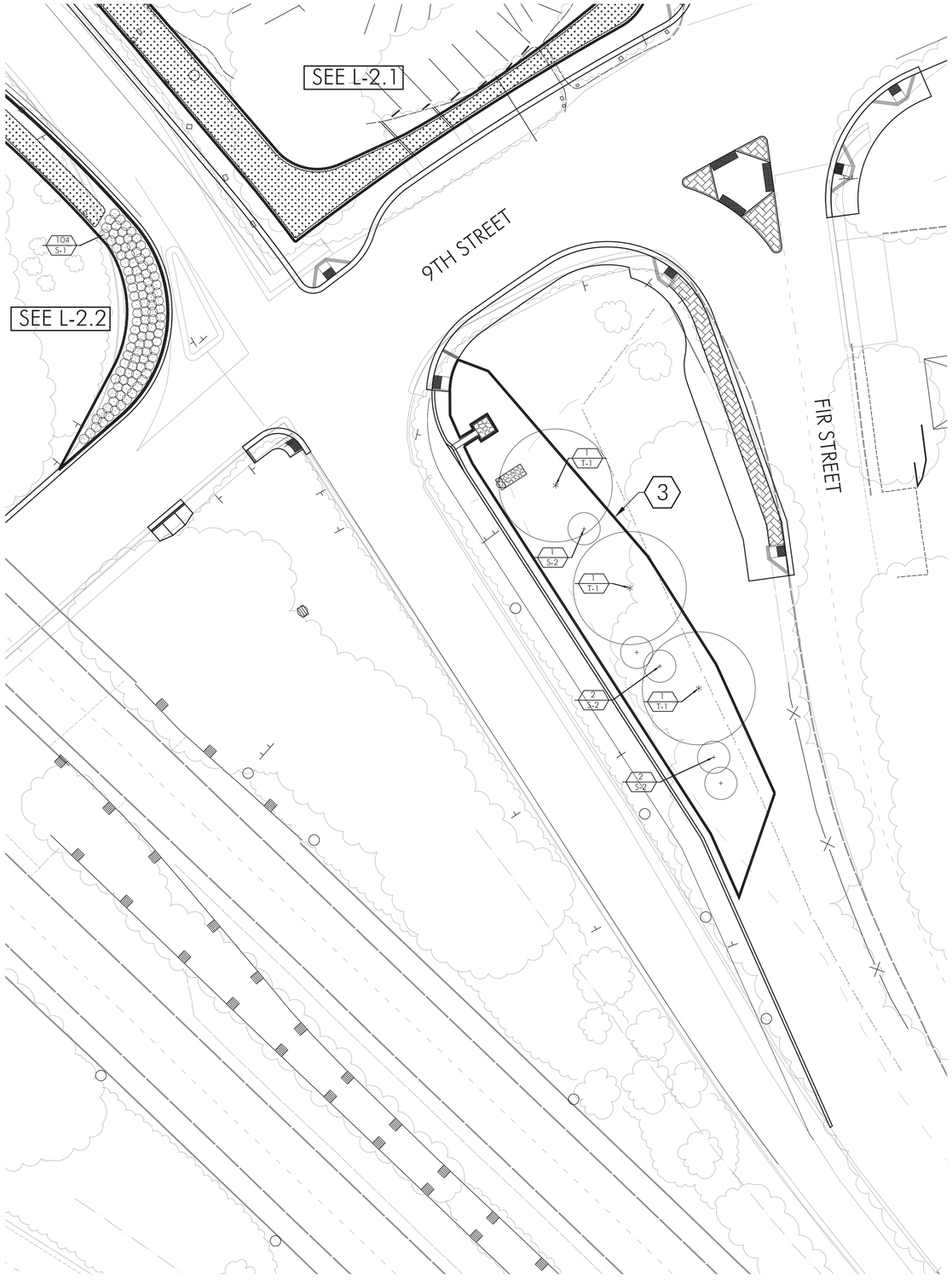

PLANT LIST

PLANT GROUP	PLANT NO.	SYMBOL	BOTANICAL NAME	COMMON NAME	SIZE	QUANTITY EACH
A	S-1	○	ROSA X 'NOARE' P.P.# 11308	FLOWER CARPET® RED GROUNDCOVER ROSE	1 GAL.	325
B	S-2	+	CERCIS OCCIDENTALIS	WESTERN REDBUD	5 GAL.	5
U	T-1	*	QUERCUS LOBATA	VALLEY OAK	15 GAL.	3
M	G-1	⁘	HYPERICUM CALYCIMUM	ST. JOHN'S WORT	LINERS	2,415

CULTIVATION

SHEET NUMBER	AREA	SOIL AMENDMENT	SLOW RELEASE FERTILIZER	PACKET FERTILIZER
	SQFT	CY	LB	EA
LS-2.0	--	--	--	--
LS-2.1	5,396	33	38	--
LS-2.2	9.925	60	70	650
LS-2.3	6,374	38	45	14
TOTAL	21,695	131	153	664

WOOD MULCH

SHEET NUMBER	MULCH
	CY
LS-2.0	--
LS-2.1	50
LS-2.2	91
LS-2.3	59
TOTAL	203

PLANTING NOTES

1. APPLY SOIL AMENDMENT AT A RATE OF 6 CUBIC YARDS PER 1000 SQUARE FEET AND SLOW RELEASE FERTILIZER AT A RATE OF 7 POUNDS PER 10000 SQUARE FEET. INSTALL 2 PACKET FERTILIZERS AT EACH 1 AND 5 GALLON SHRUB AND 3 PACKET FERTILIZERS AT EACH 15 GALLON TREE.
2. SEE 'LANDSCAPE' SECTION OF THE CURRENT (2010) CALTRANS STANDARD SPECIFICATIONS AND PROJECT SPECIAL PROVISIONS FOR ADDITIONAL INFORMATION
3. SEE PLANS BY MARK THOMAS & COMPANY FOR ADDITIONAL INFORMATION.

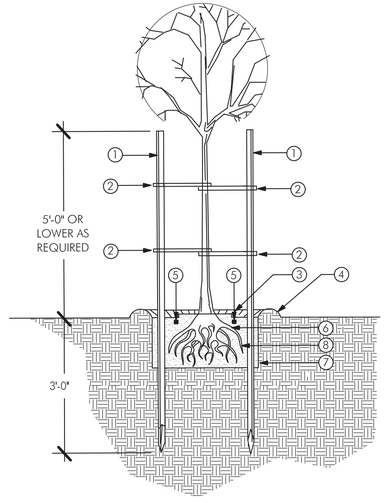

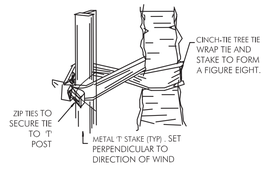

TREE TIE

1 TREE PLANTING

① 8' HEAVY DUTY STEEL GREEN T-POST. PLACE POSTS PERPENDICULAR TO PREVAILING WINDS AND OUTSIDE ROOTBALL IN UNDISTURBED NATIVE SOIL. ALL POSTS TO BE PRIMED AND PAINTED SEMI-GLOSS BLACK.

② 32" CINCH TIE TREE TIES AT (2) PLACES. SECURE TO T STAKES WITH ZIP TIES (2 PER CINCH TIE)

③ MULCH IN SHRUB AND GROUND- COVER AREAS (WHERE APPLICABLE). REFER TO SPECIFICATIONS

④ WATER RETENTION BERM REMOVE BEFORE INSTALLATION OF SOD (WHERE APPLICABLE).

⑤ FERTILIZER TABLETS, AS PER SPECIFICATIONS

⑥ ROOT BALL. FIRST ROOTS SHALL BE VISIBLE AT TOP OF ROOTBALL. SET CROWN 1" ABOVE FINISH GRADE TO ALLOW FOR SETTLING. BREAK UP SIDES OF BALL AND SPREAD OUT ROOTS. NO CIRCLING ROOTS SHALL REMAIN WITHIN 12" OF THE TREE TRUNK.

⑦ PLANT PIT SHALL BE TWICE THE DIAMETER OF ROOTBALL

⑧ BACKFILL PLANTER SOIL SEE SPECIFICATIONS

NOTES:

1. APPLY A 3" LAYER WOOD CHIP MULCH TO ALL NON-HYDROSEEDED LANDSCAPED AREAS. SEE BOOK FORM SPECIFICAITONS.

3. INSTALL ROOT BARRIER (DEEP ROOT LB-12 OR APPROVED EQUAL) AS DEPICTED ON DRAWINGS.

PLAN LEGEND

SYMBOL	DESCRIPTION	REMARKS	DETAIL
①	NOT USED		--
②	APPROXIMATE LIMITS OF GRADING	SHOWN FOR REFERENCE ONLY. SEE PLANS BY MARK THOMAS COMPANY FOR ADDITIONAL INFORMATION.	--
③	LIMIT OF MULCH	SEE PLANTING NOTES, SPECIAL PROVISIONS, AND CAL TRANS STANDARDS FOR ADDITIONAL INFORMATION.	--

NORTH

0 20 40

SCALE: 1" = 20'-0"

Dist	COUNTY	ROUTE	POST MILES TOTAL PROJECT	SHEET No.	TOTAL SHEETS
03	But	32	10.1 to 10.5	122	126

LICENSED LANDSCAPE ARCHITECT — 11-6-15 DATE

11-13-15
PLANS APPROVAL DATE

REGISTERED LANDSCAPE ARCHITECT BRIAN D. FIRTH #2752 EXP. 06-17 STATE OF CALIFORNIA

THE STATE OF CALIFORNIA OR ITS OFFICERS OR AGENTS SHALL NOT BE RESPONSIBLE FOR THE ACCURACY OR COMPLETENESS OF SCANNED COPIES OF THIS PLAN SHEET.

BRIAN FIRTH LANDSCAPE ARCHITECT, INC.
627 BROADWAY, SUITE 220
CHICO, CALIFORNIA 95928

CITY OF CHICO
CAPITAL PROJECT SERVICES
411 MAIN STREET
CHICO, CA 95927

HIGHWAY 32-
PHASE 2

LANDSCAPE PLANTING PLAN

SHEET LS-2.3

LAST REVISION: DATE PLOTTED => $DATE
00-00-00 TIME PLOTTED => $TIME

REVISED BY	DATE REVISED

CALCULATED-DESIGNED BY: B. FIRTH / JBB
CHECKED BY: B. FIRTH

CONSULTANT FUNCTIONAL SUPERVISOR: BRIAN FIRTH

STATE OF CALIFORNIA — DEPARTMENT OF TRANSPORTATION
Caltrans

BORDER LAST REVISED 8-8-2013

USERNAME => $USER
DGN FILE => $REQUEST

RELATIVE BORDER SCALE IS IN INCHES 0 1 2 3

UNIT 0000

PROJECT NUMBER & PHASE 0313000246

Dist	COUNTY	ROUTE	POST MILES TOTAL PROJECT	SHEET No.	TOTAL SHEETS
03	But	32	10.1 to 10.5	123	126

B. Firth — LICENSED LANDSCAPE ARCHITECT — 11-6-15 DATE

11-13-15 PLANS APPROVAL DATE

REGISTERED LANDSCAPE ARCHITECT — BRIAN D. FIRTH #2752 — EXP. 06-17 — STATE OF CALIFORNIA

THE STATE OF CALIFORNIA OR ITS OFFICERS OR AGENTS SHALL NOT BE RESPONSIBLE FOR THE ACCURACY OR COMPLETENESS OF SCANNED COPIES OF THIS PLAN SHEET.

BRIAN FIRTH LANDSCAPE ARCHITECT, INC.
627 BROADWAY, SUITE 220
CHICO, CALIFORNIA 95928

CITY OF CHICO
CAPITAL PROJECT SERVICES
411 MAIN STREET
CHICO, CA 95927

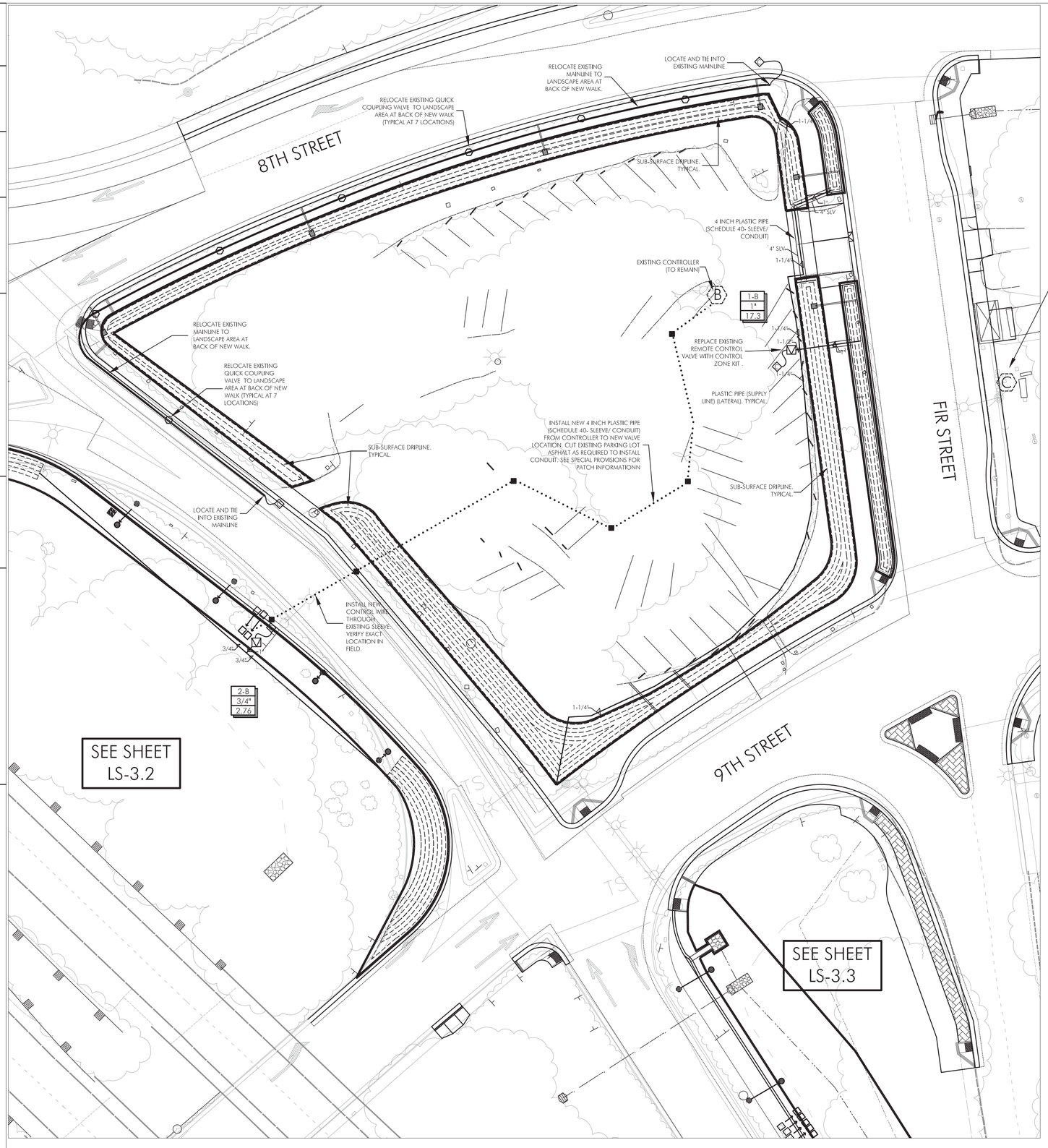

RELOCATE EXISTING IRRIGATION CONTROLLER, BACKFLOW PREVENTER AND FLOW SENSING/ MASTER VALVE ASSEMBLY TO LANDSCAPE AREA AT NEW BACK OF WALK

IRRIGATION LEGEND

SYM.	DESCRIPTION	REMARKS	DETAILS
◇	POINT OF CONNECTION	CONNECT TO EXISTING SYSTEM.	--
▽	CONTROL ZONE KIT	USE EXISTING WIRES TO WIRE TO EXISTING CONTROLLER. REPALCE EXISTING VALVE WITH NEW CONTROL ZONE KIT. SEE SPECIFICATIONS 20-3.02W (BID ITEM 2008000B)	1 & 6/ LS-3.1
□	EXISTING VALVE	RELOCATE PER PLAN	--
⬡	EXISTING CONTROLLER	TO REMAIN	--
○	QUICK COUPLING VALVE	RELOCATE TO BACK OF WALK.	--
■	PULLBOX	INSTALL AT CHANGES IN DIRECTION AS SHOWN.	5 & 6/ LS-3.1
·····	4" CONDUIT (CONTROL WIRE CONDUIT)	2" MIN. DIAMETER PVC SCHEDULE 40. PROVIDE AND INSTALL NYLON PULL TAPE AT ALL CONDUIT LOCATIONS	2 & 3/ LS-3.1
———	PLASTIC PIPE (SUPPLY LINE) (MAIN)	PVC SCHEDULE 40. SIZE AS SHOWN	2 & 3/ LS-3.1
———	PLASTIC PIPE (SUPPLY LINE) (LATERAL)	PVC SCHEDULE 40. SIZE AS SHOWN	2 & 3/ LS-3.1
⊢⊣	4" PLASTIC PIPE (IRRIGATION SLEEVE)	PVC SHEDULE 40. SIZE AS SHOWN	2 & 3/ LS-3.1
- - - - -	SUB-SURFACE DRIPLINE	NETAFIM TECHLINE: TLCV-40-18	4/ LS-3.1

IRRIGATION NOTES

1. EXISTING CONDITIONS ARE BASED UPON THE 'AS-BUILT' CONDITIONS DATED APRIL 19, 1982 PROVIDED BY CAL TRANS. CONTACT LANDSCAPE ARCHITECT IN THE EVENT THAT FIELD CONDITIONS VARY SIGNIFICANTLY FROM THOSE DEPICTED ON THE AS-BUILT DRAWINGS.
2. AS DEPICTED, TECHLINE AT THE PARKING LOT PERIMETER AMOUNTS TO APPROXIMATELY 7,000 LINEAL FEET OF SUBSURFACE DRIPPERLINE WILL BE REQUIRED. THE TOTAL FLOW RATE FOR THIS AMOUNT OF DRIPPERLINE IS APPROXIMATELY 21GALLONS PER MINUTE. FLOW SHALL NOT EXCEED 30 GALLONS PER MINUTE. CONTACT LANDSCAPE ARCHITECT IN THE EVENT THAT ADDITIONAL DRIPPERLINE IS REQUIRED.
3. THIS DRAWING IS DIAGRAMMATIC. IRRIGATION COMPONENTS SHOWN BENEATH PAVING OR PLANTINGS ARE FOR GRAPHIC CLARITY ONLY. PLACE ALL PIPING, VALVES, AND OTHER IRRIGATION COMPONENTS WITHIN THE ADJACENT PLANTER EXCEPT WHERE PIPES CROSS PAVING.
4. CONTRACTOR TO CONFIRM IN FILED SIZES, LOCATIONS, AND CONDITIONS OF ALL IRRIGATION FACILITIES TO BE RELOCATED.
5. SEE CAL TRANS STANDARD SPECIFICATIONS AND PLANS (2010) AND SPECIAL PROVISIONS FOR ADDITIONAL INFORMATION.
6. SEE PLANS BY MARK THOMAS & COMPANY FOR ADDITIONAL INFORMATION.

NORTH

0 20 40

SCALE: 1" = 20'-0"

HIGHWAY 32- PHASE 2

LANDSCAPE IRRIGATION PLAN

SHEET LS-3.0

LAST REVISION: DATE PLOTTED => $DATE
00-00-00 TIME PLOTTED => $TIME

REVISED BY | DATE REVISED
B. FIRTH / JBB | B. FIRTH
CALCULATED- DESIGNED BY | CHECKED BY
CONSULTANT FUNCTIONAL SUPERVISOR: BRIAN FIRTH
STATE OF CALIFORNIA – DEPARTMENT OF TRANSPORTATION — Caltrans

BORDER LAST REVISED 8-8-2013

USERNAME =>$USER
DGN FILE => $REQUEST

RELATIVE BORDER SCALE IS IN INCHES 0 1 2 3

UNIT 0000

PROJECT NUMBER & PHASE 0313000246

Dist	COUNTY	ROUTE	POST MILES TOTAL PROJECT	SHEET No.	TOTAL SHEETS
03	But	32	10.1 to 10.5	124	126

LICENSED LANDSCAPE ARCHITECT — 11-6-15 DATE

11-13-15
PLANS APPROVAL DATE

REGISTERED LANDSCAPE ARCHITECT — BRIAN D. FIRTH #2752 — MONTEREY — EXP. 06-17 — STATE OF CALIFORNIA

THE STATE OF CALIFORNIA OR ITS OFFICERS OR AGENTS SHALL NOT BE RESPONSIBLE FOR THE ACCURACY OR COMPLETENESS OF SCANNED COPIES OF THIS PLAN SHEET.

BRIAN FIRTH LANDSCAPE ARCHITECT, INC.
627 BROADWAY, SUITE 220
CHICO, CALIFORNIA 95928

CITY OF CHICO
CAPITAL PROJECT SERVICES
411 MAIN STREET
CHICO, CA 95927

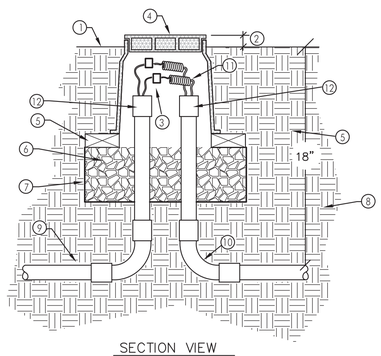

SECTION VIEW

1. FINISH GRADE
2. SET TOP OF BOX ABOVE FINISH GRADE: TOP OF VALVE BOX TO BE 3-1/2" ABOVE FINISH GRADE AT LANDSCAPE AREAS RECEIVING WOOD CHIP MULCH. ½" ABOVE FINISH GRADE IN AREAS RECEIVING HYDROSEED
3. WATERPROOF CONNECTIONS: RAINBIRD: DBTWC25 OR 3M MODEL DBR-6 OR APPROVED EQUAL. WHERE APPLICABLE.
4. GRAY PLASTIC VALVE BOX WITH BOLT DOWN LOC-KIT, CARSON MODEL 1419 OR APPROVED EQUAL
5. (4) COMMON BRICKS FOR SUPPORT
6. 3/4" CRUSHED ROCK; 6" MINIMUM DEPTH
7. 1/4" GALVANIZED WIRE CLOTH
8. UNDISTURBED SUBGRADE
9. PVC SCHEDULE 40 CONDUIT
10. PVC SCHEDULE 40 CONDUIT SWEEP ELBOWS WITH COUPLERS BOTH ENDS
11. 2-WIRE DECODER CABLE, PAIGE 14 GUAGE 2 WIRE DECODER CABLE. PROVIDE 18" MINIMUM EXTRA COILED IN VALVE BOX.
12. PVC SCH. 40 CONDUIT RISERS WITH COUPLERS AT ENDS.

NOTES:

1. SEE BOOK FORM LANDSCAPE IRRIGATION SPECIAL PROVISIONS FOR ADDITIONAL INFORMATION.

2. PULL BOX TO BE USED AT BOTH SPLICED AND UNSPLICE CONDITIONS.

N.T.S.

PULL BOX | 5

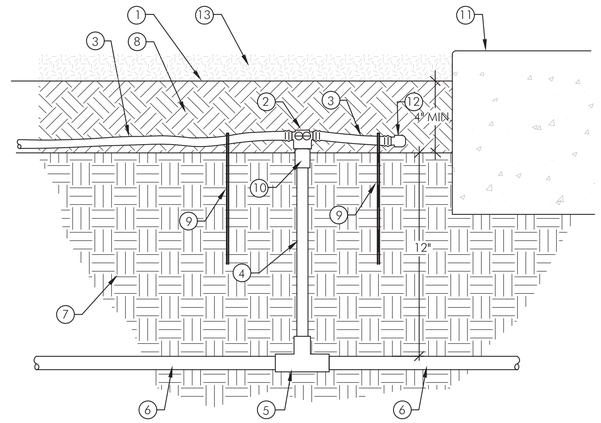

SECTION VIEW

1. FINISH GRADE
2. 3/4" FPT ADAPTER DRIPPERLINE FITTING
3. DRIPPERLINE. EXCAVATE PLANTER TO A MINIMUM DEPTH OF 4-1/2" BELOW ADJACENT HARDSCAPE AND INSTALL DRIPPERLINE ON GRADE. STAKE AT FITTINGS AND AT EVERY 5' O.C.. COVER DRIPPERLINE WITH 4" MIN. OF SOIL.
4. 3/4" PVC-IPS FLEX HOSE; USE SOLVENT CEMENT AND P70 PRIMER WHEN CONNECTING PVC-IPS FLEX HOSE TO PVC SCHEDULE 40 FITTINGS (LENGTH AS NEEDED)
5. PVC SCHEDULE 40 TEE
6. PVC SCHEDULE 40 LATERAL; SIZE PER PLAN, NO LESS THAN ¾" SZIE
7. PREPARED SUBGRADE, COMPACTED TO 90% RELATIVE DENSITY. SEE LANDSCAPE SPECIFICATIONS.
8. 4" MIN. SOIL COVER
9. TUBING STAKE, NETAFIM; TLS6. STAKE DRIPPERLINE AT FITTINGS AND 5'-0" FEET ON CENTER
10. ¾" SCH. 80 PVC FITTING :¾" S X ¾" MPT
11. CONCRETE HARDSCAPE (WHERE APPLICABLE)
12. COUPLING/ ELBOW/ T (AS REQUIRED)
13. BARK MULCH PER PLANTING PLAN AND SPECIFICATIONS.

N.T.S.

SUB-SURFACE DRIPPERLINE | 4

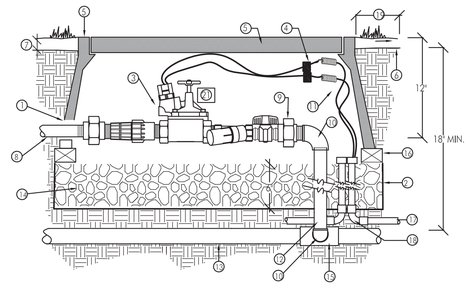

SECTION VIEW

1. TRIM VALVE BOX TO PROVIDE 1" CLEARANCE OVER PIPE
2. 1/4" GALVANIZED WIRE CLOTH PLACED ABOVE GRAVEL
3. REMOTE CONTROL DRIP VALVE ASSEMBLY; SIZE AND MODEL PER PLAN
4. WATERPROOF CONNECTIONS: RAINBIRD: DBTWC25 OR 3M MODEL DBR-6 OR APPROVED EQUAL.
5. PLASTIC VALVE BOX WITH LOCKING COVER. CARSON MODEL 1324-HDPE, GREEN OR APPROVED EQUAL. SEE SPECIFICATIONS.
6. FINISH GRADE
7. 3-1/2" ABOVE FINISH GRADE LANDSCAPE AREAS RECEIVING WOOD CHIP MULCH. ½" ABOVE FINISH GRADE IN AREAS RECEIVING HYDROSEED
8. PVC SCHEDULE 40 LATERAL LINE; PROVIDE 18" LENGTH PRIOR TO FIRST FITTING.
9. SCHEDULE 80 PVC UNION, TxT (TYP. 2 PLCS.)
10. SCHEDULE 40 PVC ELBOW, SxT
11. CONTROL/ COMMON WIRE CABLE, PAIGE 14 GUAGE . PROVIDE 18" MINIMUM EXTRA COILED IN VALVE BOX.
12. SCHEDULE 40 PVC NIPPLE; LENGTH AS REQUIRED
13. PVC SCHEDULE 40 OR CLASS 315 MAINLINE. 18" MINIMUM COVER. SEE SPECIFICATIONS.
14. 3/4" CRUSHED ROCK; 6" DEPTH
15. SCHEDULE 80 PVC TEE (SxSxS)
16. (4) COMMON BRICKS FOR VALVE BOX SUPPORT
17. PVC SCHEDULE 40 CONDUIT; SIZE AS NEEDED. SEE SPECIFICATIONS.
18. PVC SCHEDULE 40 CONDUIT SWEEP, COUPLED BOTH ENDS
19. 17' FROM EDGE OF TRAVELLED WAY, 9 FEET FROM EDGE OF ASPHALT.
20. NOT USED
21. VALVE IDENTIFICATION TAG. SEE BOOK FORM SPECIFICATIONS.

NOTES:
1. ALL SLIP FITTINGS TO BE PRIMED AND GLUED.
2. ONE VALVE PER BOX
3. INSTALL MINIMUM OF 12" FROM STRUCTURES OR HARDSCAPE.
4. INSTALL IN PLANTER BEDS WHERE POSSIBLE.
5. PLACE VALVE BOX AT RIGHT ANGLES TO STRUCTURES OR HARDSCAPE.
6. USE MIN. 3 WRAPS OF TEFLON TAPE AT EACH THREADED CONNECTION.

N.T.S.

CONTROL ZONE KIT | 1

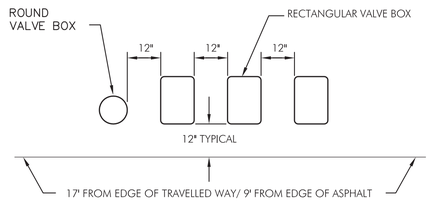

TOP VIEW

1. CENTER VALVE BOX OVER REMOTE CONTROL VALVE TO FACILITATE SERVICING VALVE.

2. SET BOXES PARALLEL TO EACH OTHER AND PERPENDICULAR TO EDGE OF HIGHWAY OR SIDEWALK (WHERE APPLICABLE)

3. AVOID HEAVILY COMPACTING SOIL AROUND VALVE BOXES TO PREVENT COLLAPSE AND DEFORMATION OF VALVE BOX SIDES.

4. INSTALL VALVE BOX EXTENSION BY VALVE BOX MANUFACTURER AS REQUIRED TO COMPLETELY ENCLOSE VALVE ASSEMBLY.

N.T.S.

VALVE BOX INSTALLATION | 6

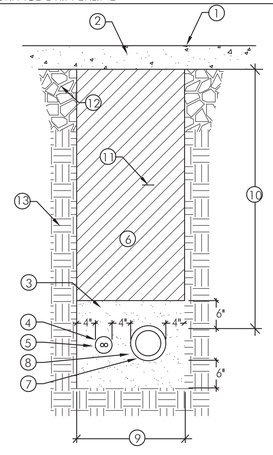

SECTION VIEW

1. FINISH GRADE PER APPROVED CIVIL PLAN
2. VEHICULAR OR PEDESTRIAN PAVING PER APPROVED CIVIL PLAN
3. SAND BACKFILL WITH 6" COVER ABOVE PIPE AND 6" BELOW PIPE
4. 2" PVC SCHEDULE 40 ELECTRIC CONDUIT
5. 2-WIRE CABLE HUNTER MODEL ID1PUR OR APPROVED EQUAL
6. TRENCH BACKFILL:
   BENEATH VEHICULAR PAVEMENT:
   -COMPACTED CLASS 11 AGGREGATE DEPTH AND COMPACTION PER ENGINEER'S PLANS
   BENEATH NON-VEHICULAR PAVEMENT:
   -NATIVE SITE SOIL, COMPACTED TO ELIMINATE SETTLING, 95% RELATIVE DENSITY
7. PVC SCHEDULE 40 SLEEVING FOR SIZES 6" AND SMALLER, HDPE WITH SMOOTH INTERIOR WALL AND INTERGAL WATER TIGHT COUPLERS FOR SIZES 8" AND LARGER
8. PVC CLASS 315 MAINLINE
9. WIDTH PER CITY OF CHICO STANDARD DETAILS AND CIVIL PLAN
10. SLEEVING, 24" MINIMUM COVER BENEATH PAVING
11. 3" DETECTABLE TAPE, BLUE WITH "CAUSTION IRRIGATION LINE BURIED BELOW" T.CHRISTY MODEL DT-03-B-I OR APPROVED EQUAL.
12. PAVEMENT SUBGRADE- AS PER APPROVED CIVIL PLANS
13. UNDISTURBED SUBGRADE

N.T.S.

TRENCHING BENEATH PAVING | 3

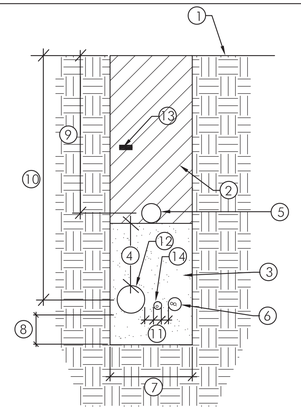

SECTION VIEW

NOTE:
SIDES OF TRENCH WILL BE DUG SQUARE AND CLEAN OF ALL SHARP MATERIAL.

1. FINISH GRADE
2. APPROVED BACKFILL, NO PARTICLES GREATER THAN 1"
3. COMPACT PER SPECIFICATIONS.
4. SIX INCHES SAND BACKFILL ABOVE MAINLINE
5. PVC SCHEDULE 40 LATERAL PIPE
6. 2" PVC SCHEDULE 40 CONDUIT WITH 2-WIRE DECODER CABLE FROM CONTROLLER TO REMOTE CONTROL VALVES AS PER SPECIFICATIONS
7. WIDTH AS NEEDED TO PROVIDE MINIMUM HORIZONTAL SEPARATION; SEE SPECIFICATIONS
8. 6" SAND BACKFILL BENEATH MAIN LINE
9. LATERAL -12" MIN. COVER
10. MAINLINE -18" MIN. COVER
11. 4" MINIMUM SEPARATION BETWEEN PIPES; NO PIPES SHALL BE LAID OVER ANOTHER
12. PVC SCHEDULE CL-315 MAIN LINE PIPE
13. 3" DETECTABLE TAPE, BLUE WITH "CAUTION IRRIGATION LINE BURIED BELOW" T.CHRISTY MODEL DT-03-B-I OR APPROVED EQUAL.
14. 3/4" PVC SCHEDULE 40 CONDUIT WITH 18-2 AWG WIRE FROM CONTROLLER TO ET WEATHER STATION

N.T.S.

TRENCHING | 2

HIGHWAY 32-PHASE 2

LANDSCAPE IRRIGATION DETAILS

SHEET LS-3.1

LAST REVISION — DATE PLOTTED => $DATE — TIME PLOTTED => $TIME
00-00-00

REVISED BY	DATE REVISED

CALCULATED-DESIGNED BY: B. FIRTH/ JBB
CHECKED BY: B. FIRTH

CONSULTANT FUNCTIONAL SUPERVISOR: BRIAN FIRTH

STATE OF CALIFORNIA — DEPARTMENT OF TRANSPORTATION — Caltrans®

BORDER LAST REVISED 8-8-2013

USERNAME => $USER
DGN FILE => $REQUEST

RELATIVE BORDER SCALE IS IN INCHES — 0 1 2 3

UNIT 0000

PROJECT NUMBER & PHASE 0313000246

IRRIGATION NOTES

1. EXISTING CONDITIONS ARE BASED UPON THE 'AS-BUILT' CONDITIONS DATED APRIL 19, 1982 PROVIDED BY CAL TRANS. CONTACT LANDSCAPE ARCHITECT IN THE EVENT THAT FIELD CONDITIONS VARY SIGNIFICANTLY FROM THOSE DEPICTED ON THE AS-BUILT DRAWINGS.
2. AS DEPICTED, TECHLINE AT THE PARKING LOT PERIMETER AMOUNTS TO APPROXIMATELY 7,000 LINEAL FEET OF SUBSURFACE DRIPPERLINE WILL BE REQUIRED. THE TOTAL FLOW RATE FOR THIS AMOUNT OF DRIPPERLINE IS APPROXIMATELY 21GALLONS PER MINUTE. FLOW SHALL NOT EXCEED 30 GALLONS PER MINUTE. CONTACT LANDSCAPE ARCHITECT IN THE EVENT THAT ADDITIONAL DRIPPERLINE IS REQUIRED.
3. THIS DRAWING IS DIAGRAMMATIC. IRRIGATION COMPONENTS SHOWN BENEATH PAVING OR PLANTINGS ARE FOR GRAPHIC CLARITY ONLY. PLACE ALL PIPING, VALVES, AND OTHER IRRIGATION COMPONENTS WITHIN THE ADJACENT PLANTER EXCEPT WHERE PIPES CROSS PAVING.
4. CONTRACTOR TO CONFIRM IN FILED SIZES, LOCATIONS, AND CONDITIONS OF ALL IRRIGATION FACILITIES TO BE RELOCATED.
5. SEE CAL TRANS STANDARD SPECIFICATIONS AND PLANS (2010) AND SPECIAL PROVISIONS FOR ADDITIONAL INFORMATION.
6. SEE PLANS BY MARK THOMAS & COMPANY FOR ADDITIONAL INFORMATION.

Dist	COUNTY	ROUTE	POST MILES TOTAL PROJECT	SHEET No.	TOTAL SHEETS
03	But	32	10.1 to 10.5	125	126

B. Firth — 11–6–15
LICENSED LANDSCAPE ARCHITECT — DATE

11–13–15
PLANS APPROVAL DATE

REGISTERED LANDSCAPE ARCHITECT — BRIAN D. FIRTH #2752 — EXP. 06-17 — STATE OF CALIFORNIA

THE STATE OF CALIFORNIA OR ITS OFFICERS OR AGENTS SHALL NOT BE RESPONSIBLE FOR THE ACCURACY OR COMPLETENESS OF SCANNED COPIES OF THIS PLAN SHEET.

BRIAN FIRTH LANDSCAPE ARCHITECT, INC.
627 BROADWAY, SUITE 220
CHICO, CALIFORNIA 95928

CITY OF CHICO
CAPITAL PROJECT SERVICES
411 MAIN STREET
CHICO, CA 95927

SEE SHEET LS-3.0

SEE SHEET LS-3.3

8TH STREET

9TH STREET

SHADOWS

ASPH

FIR STREET

INSTALL TECHLINE AT ROSE PLANTINGS SPACED AT 18" APART WITH TRIANGULAR EMITTER SPACING.

RELOCATE EXISTING SPRINKLER. RELOCATE AND REPLUM EXISTING IRRIGATION ROTOR HEADS TO 3 FEET FROM BACK OF WALK. TYPICAL AT 7 LOCATIONS .

INSTALL NEW REMOTE CONTROL VALVE WITH TECH FILTER TO IRRIGATE ROSES AT CORNERS. NSTALL CONDUCTOR BACK TO CONTROLLER.

RELOCATE EXISTING REMOTE CONTROL VALVES TO WITHIN NEW PLANTER LIMITS. SEE DETAIL 6, SHEET L-3.1

1-A
3/4"
2.1

INSTALL NEW CONTROL WIRE THROUGH EXISTING SLEEVE. VERIFY EXACT LOCATION IN FIELD.

INSTALL NEW 4 INCH PLASTIC PIPE (SCHEDULE 40- SLEEVE/ CONDUIT) FROM CONTROLLER TO NEW VALVE LOCATION. CUT EXISTING PARKING LOT ASPHALT AS REQUIRED TO INSTALL CONDUIT. SEE SPECIAL PROVISIONS FOR PATCH INFORMATION

RELOCATE EXISTING REMOTE CONTROL VALVES TO WITHIN NEW PLANTER LIMITS. SEE DETAIL 6, SHEET L-3.1

INSTALL NEW REMOTE CONTROL VALVE WITH TECH FILTER TO IRRIGATE ROSES AT CORNERS. INSTALL CONDUCTOR BACK TO CONTROLLER.

2-B
3/4"
2.76

INSTALL NEW CONTROL WIRE THROUGH EXISTING SLEEVE. VERIFY EXACT LOCATION IN FIELD.

INSTALL TECHLINE AT ROSE PLANTINGS SPACED AT 18" APART WITH TRIANGULAR EMITTER SPACING.

INSTALL TECHLINE AT ROSE PLANTINGS SPACED AT 18" APART WITH TRIANGULAR EMITTER SPACING.

INSTALL NEW 4 INCH PLASTIC PIPE (SCHEDULE 40- SLEEVE/ CONDUIT) FROM CONTROLLER TO NEW VALVE LOCATION

WIRE NEW VALVE TO EXTRA STATION AT EXISTING CONTROLLER

A

1-1/4"

IRRIGATION LEGEND

SYM.	DESCRIPTION	REMARKS	DETAILS
◇	POINT OF CONNECTION	CONNECT TO EXISTING SYSTEM.	--
☑	CONTROL ZONE KIT	USE EXISTING WIRES TO WIRE TO EXISTING CONTROLLER. REPALCE EXISTING VALVE WITH NEW CONTROL ZONE KIT. SEE SPECIFICATIONS 20-3.02W (BID ITEM 20080008)	1 & 6/ LS-3.1
□	EXISTING VALVE	RELOCATE PER PLAN	--
⬡	EXISTING CONTROLLER	TO REMAIN	--
○	QUICK COUPLING VALVE	RELOCATE TO BACK OF WALK.	--
■	PULLBOX	INSTALL AT CHANGES IN DIRECTION AS SHOWN.	5 & 6/ LS-3.1
·····	4" CONDUIT (CONTROL WIRE CONDUIT)	2" MIN. DIAMETER PVC SCHEDULE 40. PROVIDE AND INSTALL NYLON PULL TAPE AT ALL CONDUIT LOCATIONS	2 & 3/ LS-3.1
———	PLASTIC PIPE (SUPPLY LINE) (MAIN)	PVC SCHEDULE 40. SIZE AS SHOWN	2 & 3/ LS-3.1
———	PLASTIC PIPE (SUPPLY LINE) (LATERAL)	PVC SCHEDULE 40. SIZE AS SHOWN	2 & 3/ LS-3.1
⊢⊣	4" PLASTIC PIPE (IRRIGATION SLEEVE)	PVC SHEDULE 40. SIZE AS SHOWN	2 & 3/ LS-3.1
– – –	SUB-SURFACE DRIPLINE	NETAFIM TECHLINE: TLCV-40-18	4/ LS-3.1

NORTH

0 50 100
SCALE: 1" = 50'-0"

HIGHWAY 32- PHASE 2

LANDSCAPE IRRIGATION PLAN

SHEET LS-3.2

LAST REVISION: DATE PLOTTED => $DATE
00-00-00 TIME PLOTTED => $TIME

REVISED BY	DATE REVISED

CALCULATED- DESIGNED BY: B. FIRTH/ JBB
CHECKED BY: B. FIRTH

CONSULTANT FUNCTIONAL SUPERVISOR: BRIAN FIRTH

STATE OF CALIFORNIA — DEPARTMENT OF TRANSPORTATION
Caltrans®

BORDER LAST REVISED 8-8-2013

USERNAME => $USER
DGN FILE => $REQUEST

RELATIVE BORDER SCALE IS IN INCHES
0 1 2 3

UNIT 0000

PROJECT NUMBER & PHASE 0313000246

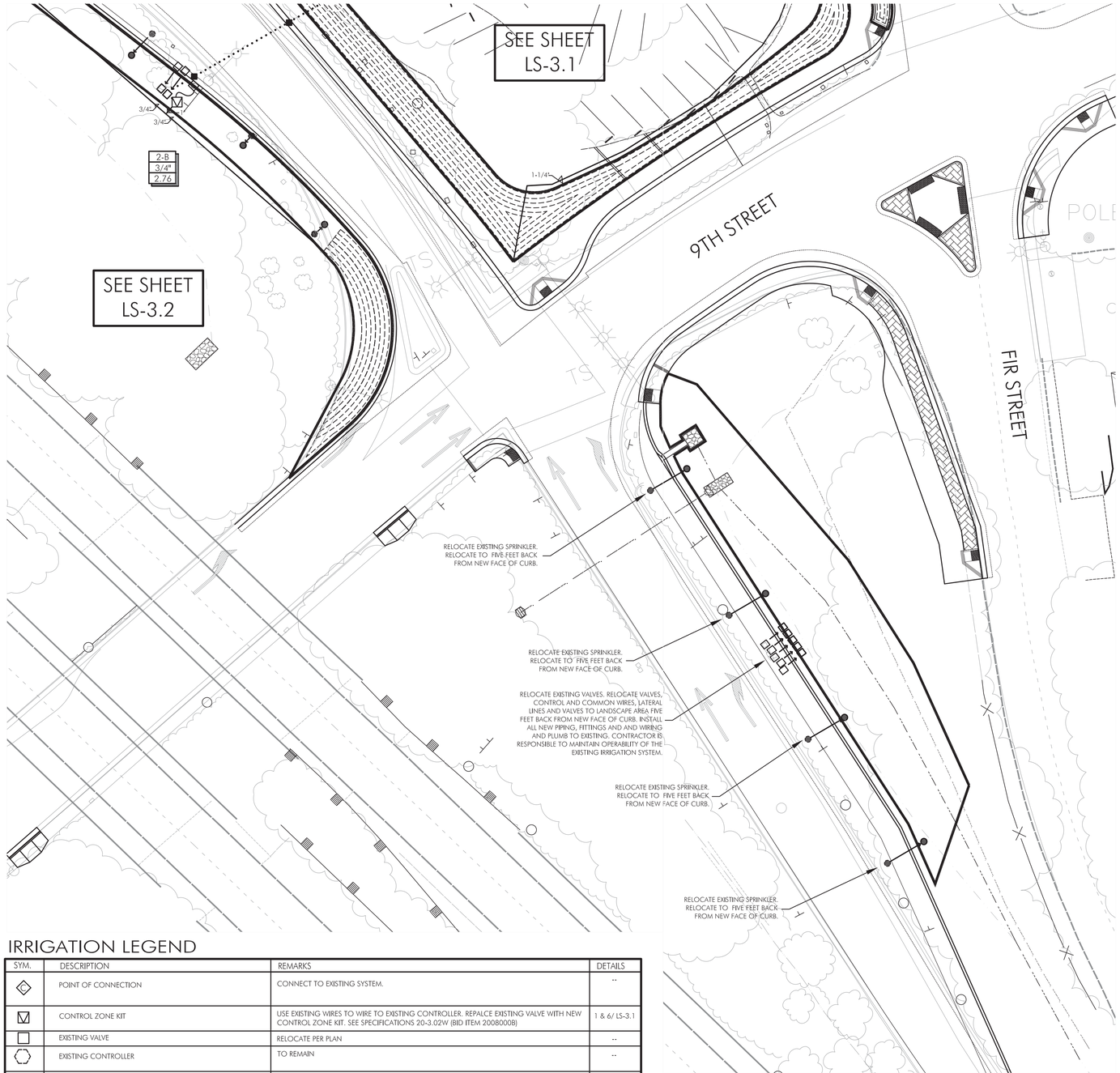

SUBTOTALS PER VALVE ON LATERAL SUPPLY SIDE OF CONTROL VALVE

DESCRIPTION			UNIT	1-B	2-B	1-A
PLASTIC PIPE SUPPLY LINE	SCH. 40	3/4" INCH	LF	--	170	160
		1 INCH	LF	39	--	--
		1-1/4 INCH	LF	265	--	--
	DRIPLINE	IRRIGATION SYSTEM (SUBSURFACE DRIPLINE)	SQFT	5,396	1,022	704

SUBTOTALS PER PLAN SHEET ON MAIN SUPPLY SIDE OF CONTROL VALVE

DESCRIPTION				UNIT	SHEET NUMBER			
					LS-3.0	LS-3.1	LS-3.2	LS-3.3
VALVES AND ASSEMBLIES		RCV	3/4" INCH	EA	2	--	--	--
			1 INCH	EA	--	--	1	--
		QCV	3/4" INCH	EA	--	--	--	--
	IRRIGATION SLEEVE	SCH.40	4 INCH	LF	255	--	200	--

SUBTOTALS PER PLAN SHEET ON MAIN SUPPLY SIDE OF CONTROL VALVE

DESCRIPTION	UNIT	SHEET NUMBER			
		LS-3.0	LS-3.1	LS-3.2	LS-3.3
RELOCATE EXISTING QUICK COUPLER VALVE	EA	11	--	--	--
RELOCATE EXISTING IRRIGATION PIPING	LF	1000	--	--	400
RELOCATE EXISTING SPRINKLER	EA	--	--	11	4
RELOCATE EXISTING VALVE	EA	--	--	4	5

CONTRACTOR IS RESPONSIBLE TO FIELD VERIFY SIZES, CONDITIONS, AND LOCATIONS OF ALL EXISTING IRRIGATION FACILITIES TO BE RELOCATED.

TOTAL QUANTITIES

TOTALS	UNIT	DESCRIPTION		
2	EA	3/4" INCH	RCV	VALVES AND ASSEMBLIES
1	EA	1 INCH		
--	EA	3/4" INCH	QCV	
455	LF	4 INCH PLASTIC PIPE (SCHEDULE 40- SLEEVE/ CONDUIT)		IRRIGATION SLEEVE
330	LF	3/4" INCH		PLASTIC SUPPLY PIPE
39	LF	1 INCH		
265	LF	1-1/4 INCH		
7095	SQFT	IRRIGATION SYSTEM (SUBSURFACE DRIPLINE)		
11	EA	RELOCATE EXISTING QUICK COUPLER VALVE		MISCELLANIOUS
1400	LF	RELOCATE EXISTING IRRIGATION PIPING		
15	EA	RELOCATE EXISTING SPRINKLER		
8	EA	RELOCATE EXISTING VALVE		
1	EA	RELOCATE IRRIGATION CONTROLLER		
1	EA	RELOCATE BACKFLOW PREVENTER (AND FLOW SENSING/ MASTER VALVE ASSEMBLY)		

ABBREVIATIONS

LS-- LUMP SUM
QCV-- QUICK COUPLING VLAVE
RCV-- REMOTE CONTROL VALVE

IRRIGATION LEGEND

SYM.	DESCRIPTION	REMARKS	DETAILS
	POINT OF CONNECTION	CONNECT TO EXISTING SYSTEM.	--
	CONTROL ZONE KIT	USE EXISTING WIRES TO WIRE TO EXISTING CONTROLLER. REPALCE EXISTING VALVE WITH NEW CONTROL ZONE KIT. SEE SPECIFICATIONS 20-3.02W (BID ITEM 2008000B)	1 & 6/ LS-3.1
	EXISTING VALVE	RELOCATE PER PLAN	--
	EXISTING CONTROLLER	TO REMAIN	--
	QUICK COUPLING VALVE	RELOCATE TO BACK OF WALK.	--
	PULLBOX	INSTALL AT CHANGES IN DIRECTION AS SHOWN.	5 & 6/ LS-3.1
	4" CONDUIT (CONTROL WIRE CONDUIT)	2" MIN. DIAMETER PVC SCHEDULE 40. PROVIDE AND INSTALL NYLON PULL TAPE AT ALL CONDUIT LOCATIONS	2 & 3/ LS-3.1
	PLASTIC PIPE (SUPPLY LINE) (MAIN)	PVC SCHEDULE 40. SIZE AS SHOWN	2 & 3/ LS-3.1
	PLASTIC PIPE (SUPPLY LINE) (LATERAL)	PVC SCHEDULE 40. SIZE AS SHOWN	2 & 3/ LS-3.1
	4" PLASTIC PIPE (IRRIGATION SLEEVE)	PVC SHEDULE 40. SIZE AS SHOWN	2 & 3/ LS-3.1
	SUB-SURFACE DRIPLINE	NETAFIM TECHLINE; TLCV-40-18	4/ LS-3.1

IRRIGATION NOTES

1. EXISTING CONDITIONS ARE BASED UPON THE 'AS-BUILT' CONDITIONS DATED APRIL 19, 1982 PROVIDED BY CAL TRANS. CONTACT LANDSCAPE ARCHITECT IN THE EVENT THAT FIELD CONDITIONS VARY SIGNIFICANTLY FROM THOSE DEPICTED ON THE AS-BUILT DRAWINGS.
2. AS DEPICTED, TECHLINE AT THE PARKING LOT PERIMETER AMOUNTS TO APPROXIMATELY 7,000 LINEAL FEET OF SUBSURFACE DRIPPERLINE WILL BE REQUIRED. THE TOTAL FLOW RATE FOR THIS AMOUNT OF DRIPPERLINE IS APPROXIMATELY 21GALLONS PER MINUTE. FLOW SHALL NOT EXCEED 30 GALLONS PER MINUTE. CONTACT LANDSCAPE ARCHITECT IN THE EVENT THAT ADDITIONAL DRIPPERLINE IS REQUIRED.
3. THIS DRAWING IS DIAGRAMMATIC. IRRIGATION COMPONENTS SHOWN BENEATH PAVING OR PLANTINGS ARE FOR GRAPHIC CLARITY ONLY. PLACE ALL PIPING, VALVES, AND OTHER IRRIGATION COMPONENTS WITHIN THE ADJACENT PLANTER EXCEPT WHERE PIPES CROSS PAVING.
4. CONTRACTOR TO CONFIRM IN FILED SIZES, LOCATIONS, AND CONDITIONS OF ALL IRRIGATION FACILITIES TO BE RELOCATED.
5. SEE CAL TRANS STANDARD SPECIFICATIONS AND PLANS (2010) AND SPECIAL PROVISIONS FOR ADDITIONAL INFORMATION.
6. SEE PLANS BY MARK THOMAS & COMPANY FOR ADDITIONAL INFORMATION.

Dist	COUNTY	ROUTE	POST MILES TOTAL PROJECT	SHEET No.	TOTAL SHEETS
03	But	32	10.1 to 10.5	126	126

LICENSED LANDSCAPE ARCHITECT — 11-6-15 DATE

11-13-15
PLANS APPROVAL DATE

REGISTERED LANDSCAPE ARCHITECT BRIAN D. FIRTH #2752 MONTEREY EXP. 06-17 STATE OF CALIFORNIA

THE STATE OF CALIFORNIA OR ITS OFFICERS OR AGENTS SHALL NOT BE RESPONSIBLE FOR THE ACCURACY OR COMPLETENESS OF SCANNED COPIES OF THIS PLAN SHEET.

BRIAN FIRTH LANDSCAPE ARCHITECT, INC.
627 BROADWAY, SUITE 220
CHICO, CALIFORNIA 95928

CITY OF CHICO
CAPITAL PROJECT SERVICES
411 MAIN STREET
CHICO, CA 95927

NORTH

0 20 40

SCALE: 1" = 20'-0"

HIGHWAY 32-PHASE 2

LANDSCAPE IRRIGATION PLAN

SHEET LS-3.3

LAST REVISION — DATE PLOTTED => $DATE — TIME PLOTTED => $TIME — 00-00-00

REVISED BY	DATE REVISED

CALCULATED- DESIGNED BY: B. FIRTH/ JBB
CHECKED BY: B. FIRTH

CONSULTANT FUNCTIONAL SUPERVISOR: BRIAN FIRTH

STATE OF CALIFORNIA — DEPARTMENT OF TRANSPORTATION — Caltrans

BORDER LAST REVISED 8-8-2013

USERNAME => $USER
DGN FILE => $REQUEST

RELATIVE BORDER SCALE IS IN INCHES 0 1 2 3

UNIT 0000

PROJECT NUMBER & PHASE 0313000246