Dist	COUNTY	ROUTE	POST MILES TOTAL PROJECT	SHEET No.	TOTAL SHEETS
03	But	32	10.1/10.5	10	126

REGISTERED CIVIL ENGINEER DATE 11-6-15

PLANS APPROVAL DATE NOVEMBER 13, 2015

REGISTERED PROFESSIONAL ENGINEER JAMES MARSHALL PANGBURN No. 71445 Exp. 12/31/15 CIVIL STATE OF CALIFORNIA

THE STATE OF CALIFORNIA OR ITS OFFICERS OR AGENTS SHALL NOT BE RESPONSIBLE FOR THE ACCURACY OR COMPLETENESS OF SCANNED COPIES OF THIS PLAN SHEET.

MARK THOMAS & CO., INC.
7300 FOLSOM BLVD STE 203
SACRAMENTO, CA 95826

CITY OF CHICO
CAPITAL PROJECT SERVICES
411 MAIN STREET
CHICO, CA 95927

NOTES:

1. SEE SHEET X-1 FOR ADDITIONAL NOTES.
2. SEE LAYOUT SHEETS FOR LIMITS OF OBLITERATE SURFACING.

LEGEND (THIS SHEET ONLY)

EMBANKMENT

OBLITERATE SURFACING

ROADWAY EXCAVATION

REMOVE CONCRETE

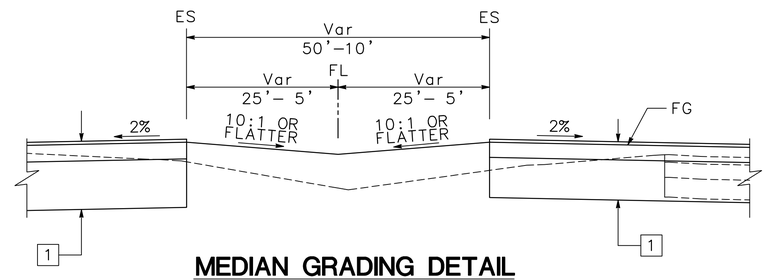

MEDIAN GRADING DETAIL

"B"109+00 TO "B"112+00.00

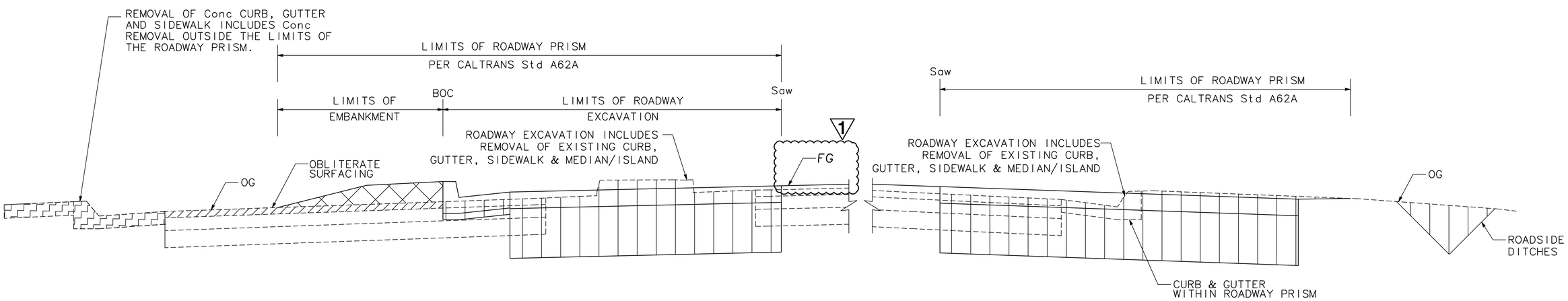

ROADWAY DEMOLITION PAYMENT DETAIL

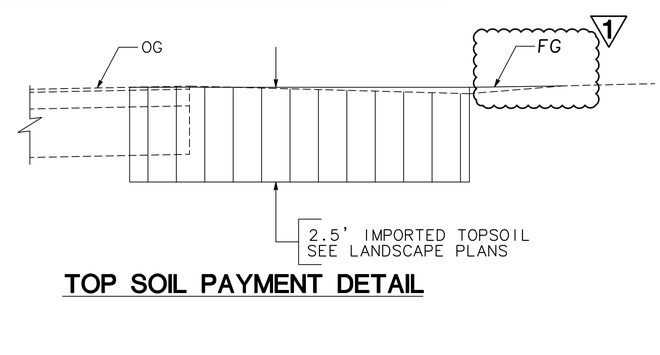

TOP SOIL PAYMENT DETAIL

TYPICAL CROSS SECTIONS

NO SCALE

X-9

1 REPLACED PER ADDENDUM No. 1 DATED NOVEMBER 24, 2015

REVISED BY	DATE REVISED
1	11/24/15

CALCULATED-DESIGNED BY E. WEEKS
CHECKED BY J. PANGBURN
CONSULTANT FUNCTIONAL SUPERVISOR JAMES MARSHALL PANGBURN

STATE OF CALIFORNIA - DEPARTMENT OF TRANSPORTATION
Caltrans

PATH: V:\Chico-55-0131-SR32 Widening\CADD\Phase 2 - SR 99 to East of Park and Ride\Drawing\sr32_X1-X5 PLOT DATE: Nov 24, 2015-10:57:33am CAD USER: kfriedrich

LAST REVISION 00-00-00 DATE PLOTTED => $DATE TIME PLOTTED => $TIME

Dist	COUNTY	ROUTE	POST MILES TOTAL PROJECT	SHEET No.	TOTAL SHEETS
03	But	32	10.1/10.5	38	126

REGISTERED CIVIL ENGINEER DATE 11-6-15

NOVEMBER 13, 2015
PLANS APPROVAL DATE

REGISTERED PROFESSIONAL ENGINEER JAMES MARSHALL PANGBURN No. 71445 Exp. 12/31/15 CIVIL STATE OF CALIFORNIA

THE STATE OF CALIFORNIA OR ITS OFFICERS OR AGENTS SHALL NOT BE RESPONSIBLE FOR THE ACCURACY OR COMPLETENESS OF SCANNED COPIES OF THIS PLAN SHEET.

MARK THOMAS & CO., INC.
7300 FOLSOM BLVD STE 203
SACRAMENTO, CA 95826

CITY OF CHICO
CAPITAL PROJECT SERVICES
411 MAIN STREET
CHICO, CA 95927

NOTES:

1. ALL STEEL PLATES SHALL BE TREATED WITH NON-SLIP COATING.

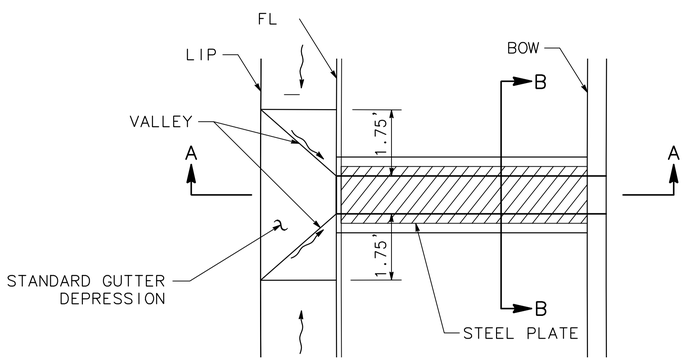

UNDER SIDEWALK DRAIN

NO SCALE

11 16 17 18 19

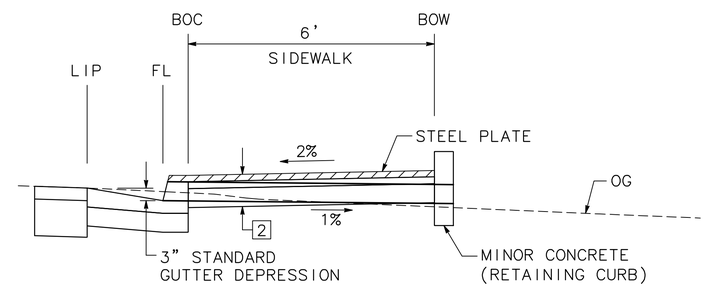

SECTION A-A

NO SCALE

APC ALLOWABLE PIPE MATERIAL

DESCRIPTION	CSP (0.138") (GALVANIZED)	CAP (0.064")	RCP
	SIZE	SIZE	SIZE
18"	18"	18"	18"
24"	24"	24"	24"

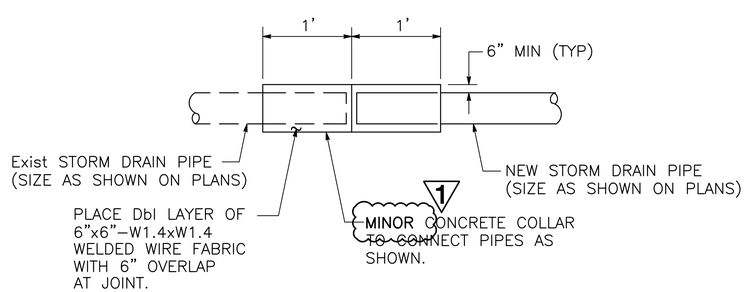

CONCRETE COLLAR CONNECTION DETAIL

"R2" 1512+38.96 22.76 Rt
NO SCALE

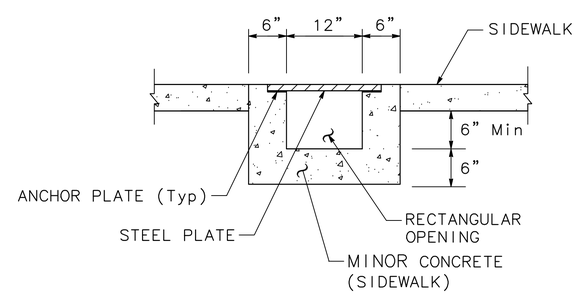

SECTION B-B

NO SCALE

1 REPLACED PER ADDENDUM No. 1 DATED NOVEMBER 24, 2015

DRAINAGE DETAILS

DD-3

STATE OF CALIFORNIA - DEPARTMENT OF TRANSPORTATION
Caltrans

CONSULTANT FUNCTIONAL SUPERVISOR: JAMES MARSHALL PANGBURN
CALCULATED-DESIGNED BY: E. WEEKS
CHECKED BY: J. PANGBURN
REVISED BY: 1
DATE REVISED: 11/24/15

PATH: V:\Chico-55-0131-SR32 Widening\CADD\Construction Support - Phase 2\ACM\ACM\DD\DD3.dgn
PLOT DATE: Nov 24, 2015-11:02:27am CAD USER: kfriedrich

LAST REVISION 00-00-00 | DATE PLOTTED => $DATE | TIME PLOTTED => $TIME

BORDER LAST REVISED 7/2/2010 | USERNAME => $USER | DGN FILE => $REQUEST | RELATIVE BORDER SCALE IS IN INCHES 0 1 2 3 | UNIT 0000 | PROJECT NUMBER & PHASE 0313000246

Dist	COUNTY	ROUTE	POST MILES TOTAL PROJECT	SHEET No.	TOTAL SHEETS
03	But	32	10.1/10.5	44	126

11-6-15
REGISTERED CIVIL ENGINEER DATE

NOVEMBER 13, 2015
PLANS APPROVAL DATE

REGISTERED PROFESSIONAL ENGINEER
JAMES MARSHALL PANGBURN
No. 71445
Exp. 12/31/15
CIVIL
STATE OF CALIFORNIA

THE STATE OF CALIFORNIA OR ITS OFFICERS OR AGENTS SHALL NOT BE RESPONSIBLE FOR THE ACCURACY OR COMPLETENESS OF SCANNED COPIES OF THIS PLAN SHEET.

MARK THOMAS & CO., INC.
7300 FOLSOM BLVD STE 203
SACRAMENTO, CA 95826

CITY OF CHICO
CAPITAL PROJECT SERVICES
411 MAIN STREET
CHICO, CA 95927

LEGEND:

STAGE 1 ROADWAY CONSTRUCTION

CONSTRUCTION ACTIVITIES (STAGE 1): 1

1. WIDEN SR 99 RAMP COUPLETS.
2. WIDEN EAST SIDE OF FIR STREET.
3. WIDEN NORTH SIDE OF EASTBOUND ROUTE 32.
4. WIDEN SOUTHBOUND EXIT RAMP.
5. WIDEN SHOULDER ALONG EASTBOUND SR 32.
6. CONSTRUCT WESTBOUND ROADWAY ALONG SR 32 AND SOUTHBOUND ROADWAY ALONG FIR STREET.
7. INSTALL CURB RAMPS AND CURBS ALONG EAST SIDE OF FIR STREET.
8. ROUGH GRADE EMBANKMENT.

VEHICULAR TRAFFIC THIS STAGE:

1. MAINTAIN TRAFFIC WITH EXISTING SIGNAL OPERATIONS.
2. PLACE TEMPORARY RAILING (TYPE K), TEMPORARY PAVEMENT DELINEATION, CHANNELIZERS, ETC. PER TRAFFIC HANDLING PLANS

PEDESTRIAN TRAFFIC THIS STAGE:

1. MAINTAIN PEDESTRIAN TRAFFIC ALONG WEST SIDE OF FIR STREET, EAST 8TH, AND EAST 9TH STREET. 1
2. PROVIDE PEDESTRIAN ACCESS TO TEMPORARY BUS TOP LOCATION. 1

NOTES:

1. REFER TO SPECIAL PROVISIONS FOR LIMITATIONS OF WORK PERIODS.
2. FOR ADDITIONAL CONSTRUCTION AREA SIGNS, SEE CONSTRUCTION AREA SIGN PLAN.
3. SEE ELECTRICAL SHEETS FOR TEMPORARY SIGNALS.
4. TEMPORARY RAILING (TYPE K) SHALL BE PINNED WHEN CLEARANCE FROM BACK OF RAILING TO WORKZONE IS LESS THAN 2'.

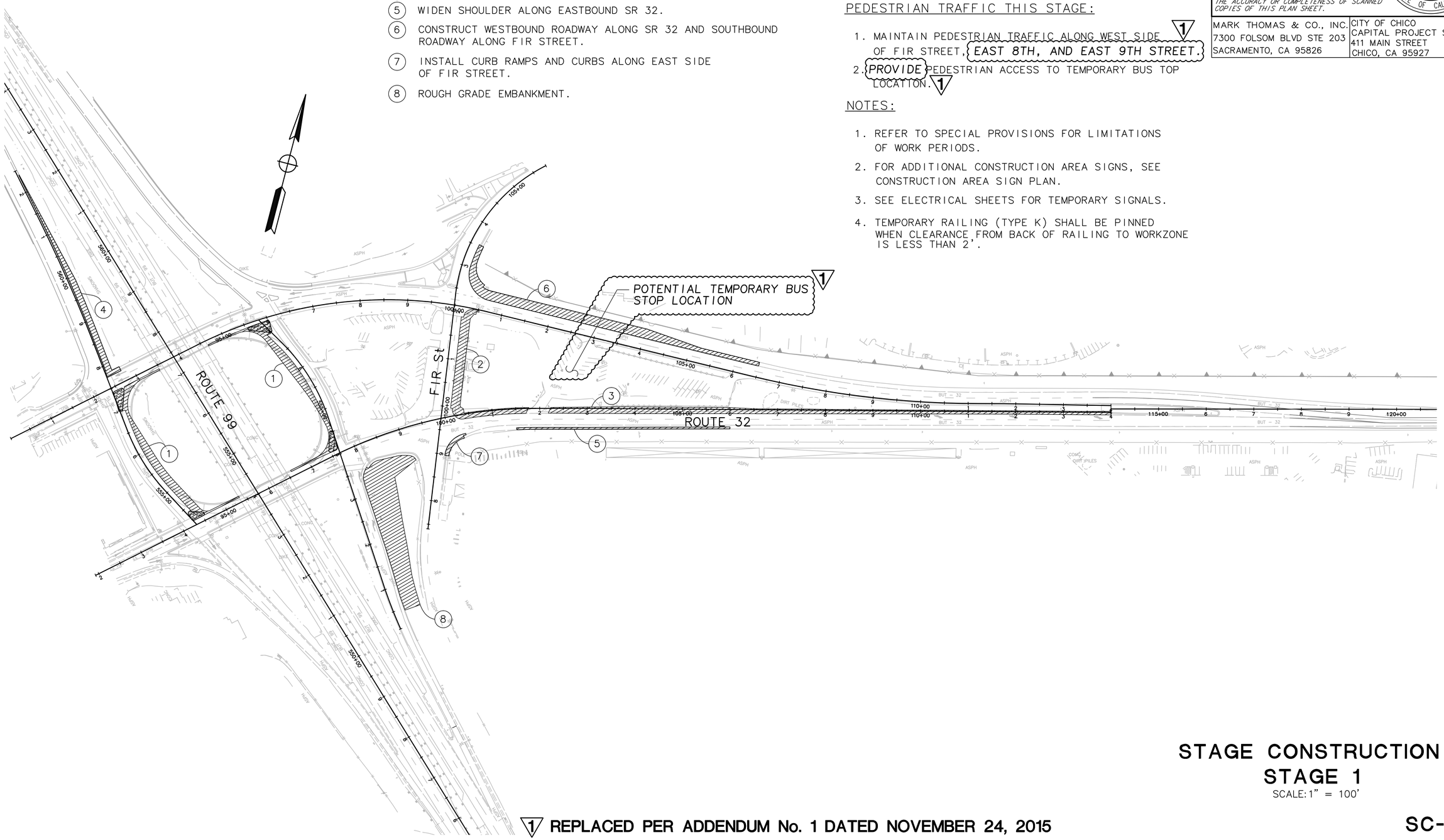

STAGE CONSTRUCTION
STAGE 1

SCALE: 1" = 100'

1 REPLACED PER ADDENDUM No. 1 DATED NOVEMBER 24, 2015

SC-1

STATE OF CALIFORNIA – DEPARTMENT OF TRANSPORTATION
Caltrans

CONSULTANT FUNCTIONAL SUPERVISOR: JAMES MARSHALL PANGBURN
CALCULATED-DESIGNED BY: E. WEEKS
CHECKED BY: J. PANGBURN
REVISED BY: 1
DATE REVISED: 11/24/15

BORDER LAST REVISED 7/2/2010 | USERNAME => $USER | RELATIVE BORDER SCALE 0 1 2 3 | UNIT 0000 | PROJECT NUMBER & PHASE 0313000246

Dist	COUNTY	ROUTE	POST MILES TOTAL PROJECT	SHEET No.	TOTAL SHEETS
03	But	32	10.1/10.5	45	126

REGISTERED CIVIL ENGINEER DATE 11-6-15

NOVEMBER 13, 2015
PLANS APPROVAL DATE

REGISTERED PROFESSIONAL ENGINEER JAMES MARSHALL PANGBURN No. 71445 Exp. 12/31/15 CIVIL STATE OF CALIFORNIA

THE STATE OF CALIFORNIA OR ITS OFFICERS OR AGENTS SHALL NOT BE RESPONSIBLE FOR THE ACCURACY OR COMPLETENESS OF SCANNED COPIES OF THIS PLAN SHEET.

MARK THOMAS & CO., INC.
7300 FOLSOM BLVD STE 203
SACRAMENTO, CA 95826

CITY OF CHICO
CAPITAL PROJECT SERVICES
411 MAIN STREET
CHICO, CA 95927

LEGEND:

STAGE 2 ROADWAY CONSTRUCTION

CONSTRUCTION ACTIVITIES (STAGE 2): 1

1. CONSTRUCT WESTBOUND ROADWAY ALONG SR 32 AND SOUTHBOUND ROADWAY ALONG FIR STREET.
2. CONSTRUCT CURB, GUTTER AND SIDEWALK IMPROVEMENTS AT PARK AND RIDE LOT.
3. WIDEN NORTHBOUND EXIT RAMP, REPLACE CURB RAMPS AND CURBS ALONG FIR STREET.

VEHICULR TRAFFIC THIS STAGE:

1. MAINTAIN TRAFFIC WITH EXISTING SIGNAL OPERATIONS.
2. PLACE TEMPORARY RAILING (TYPE K), TEMPORARY PAVEMENT DELINEATION, CHANNELIZERS, ETC. PER TRAFFIC HANDLING PLANS

PEDESTRIAN TRAFFIC THIS STAGE:

1. MOVE PEDESTRIAN TRAFFIC TO EAST SIDE OF FIR STREET.
2. MAINTAIN PEDESTRIAN ACCESS ALONG EAST 9TH STREET. 1

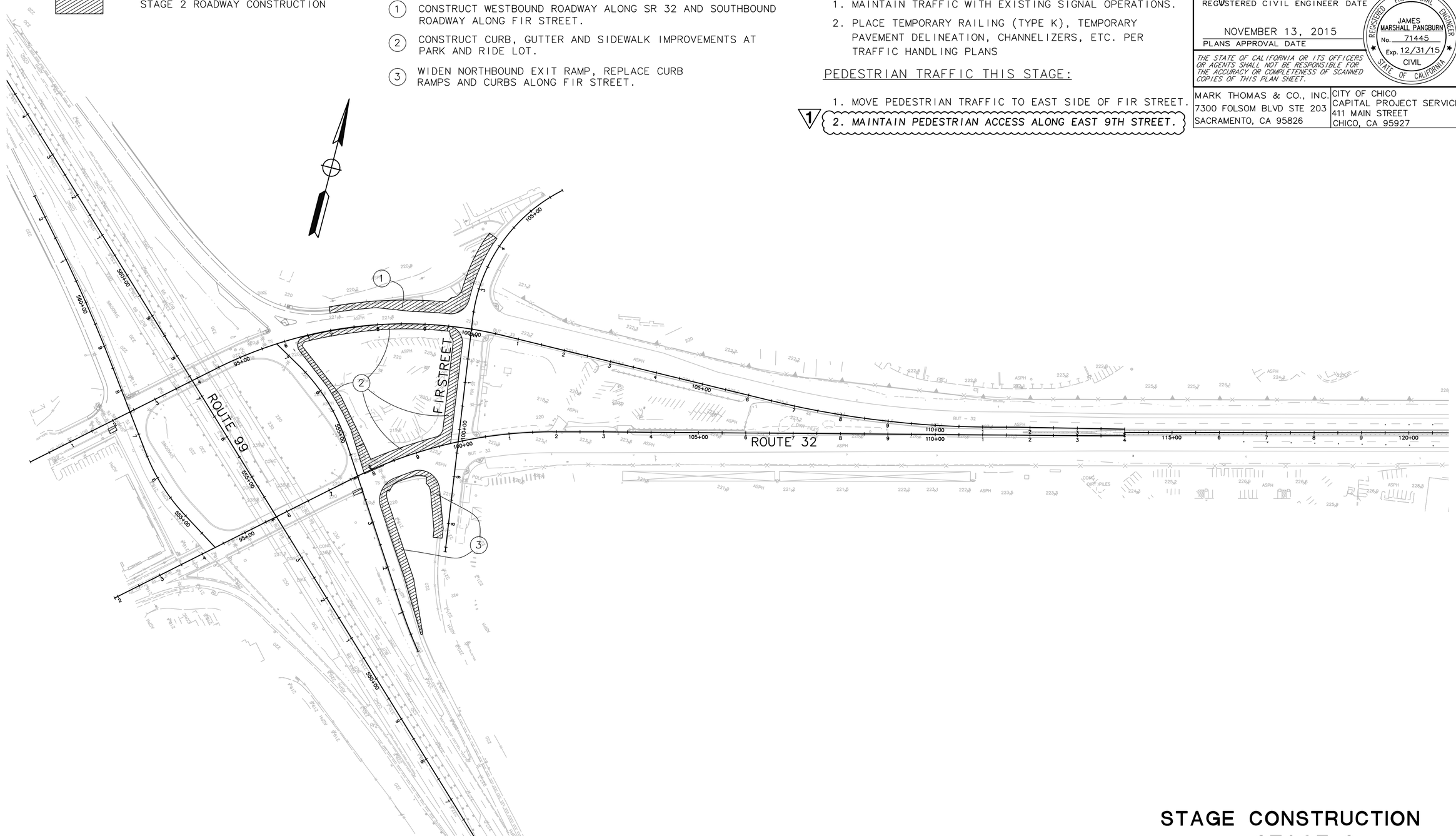

1 REPLACED PER ADDENDUM No. 1 DATED NOVEMBER 24, 2015

STAGE CONSTRUCTION
STAGE 2
SCALE: 1" = 100'

SC-2

1	11/24/15	E. WEEKS	J. PANGBURN
REVISED BY	DATE REVISED	CALCULATED-DESIGNED BY	CHECKED BY

CONSULTANT FUNCTIONAL SUPERVISOR: JAMES MARSHALL PANGBURN

STATE OF CALIFORNIA - DEPARTMENT OF TRANSPORTATION

Caltrans

PATH: V:\Chico-55-0131-SR32 Widening\CADD\Phase 2 - SR 99 to East of Park and Ride\Drawing\sr32_SC2 PLOT DATE: Nov 24, 2015-11:08:41am CAD USER: kfriedrich

LAST REVISION 00-00-00 | DATE PLOTTED => $DATE | TIME PLOTTED => $TIME

BORDER LAST REVISED 7/2/2010 | USERNAME => $USER | DGN FILE => $REQUEST | RELATIVE BORDER SCALE IS IN INCHES 0 1 2 3 | UNIT 0000 | PROJECT NUMBER & PHASE 0313000246