FIRE DEPARTMENT

CITY OF CHICO
INC 1872

ISO 2 City

P.O. Box 3420
Chico, CA 95927
(530) 897-3400
FAX (530) 895-4931

Fire Station 1
842 Salem Street

Fire Station 2
182 E. Fifth Ave

Fire Station 3
145 Boeing Ave

Fire Station 4
2405 Notre Dame Blvd

Fire Station 5
1777 Manzanita Ave

Fire Station 6
2544 Highway 32

Training Center
1466 Humboldt Rd

City of Chico
Fire Prevention & Life Safety Bureau
Standard for
Illuminated Emergency Response Map

This standard has been developed as the minimum design criteria for the purpose of clearly identifying and marking proper addresses, pursuant to Section 505 of the California Fire Code and Section 501.2 of the California Building Code.

1. In addition to individual building suite or apartment numeral or letters, condominiums, apartment complexes, townhouses, mobile home parks and multiple commercial building developments shall have installed at points of entry, an Illuminated Emergency Response Map (IERM).

2. The IERM shall be illuminated internally and shall consist of the following:

   A. Each IERM shall be adequately illuminated internally to be visible and legible at a distance of 20 feet. IREM's located in **residential areas** shall be designed in a manner to reduce the amount of illumination to that which is necessary.
   B. Each IERM shall be "site oriented" to correctly represent the development as seen by the individual when viewing the sign.
   C. A plot plan showing the building locations, private drives and access roads.
   D. All numerals and street name designations shall be indicated in *Arial* font and **Bold** as follows:
      - Site address or address range for all buildings (minimum height of numbers shall be 1 ½").
      - Building Number designations or Individually Addressed Buildings (minimum height of numbers shall be 1").
      - Suite/Apartment unit number range (minimum height of numbers shall be ¾").
      - Name of Complex/Development (maximum height of letters shall not be greater than the size of the Site address).
   E. Indicate fire hydrant locations with a solid **RED** ½" circle.
   F. A north direction indicator.
   G. A reference point, i.e. "You are Here", on the plot plan showing the location of the directory sign shall be indicted with a solid **GREEN** ¾" triangle.
   H. Any text or numerals other than those specified under Section 2 Part C shall be a minimum of ¾" in height.

3. The developer or the property owner shall submit to the Building Division for review and approval a detailed plan showing size, materials, method of construction, electrical components and wiring, and the location(s) of the installation(s).

4. Figure 1 indicates the minimum dimensions of the directory (large complexes may require greater dimensions). For additional information contact the Fire Prevention Bureau at 530-897-3400 or the Building Division at 530 879-6700.

Made From Recycled Paper

City of Chico
Fire Prevention and Life Safety Bureau

STANDARD
Illuminated Emergency Response Map
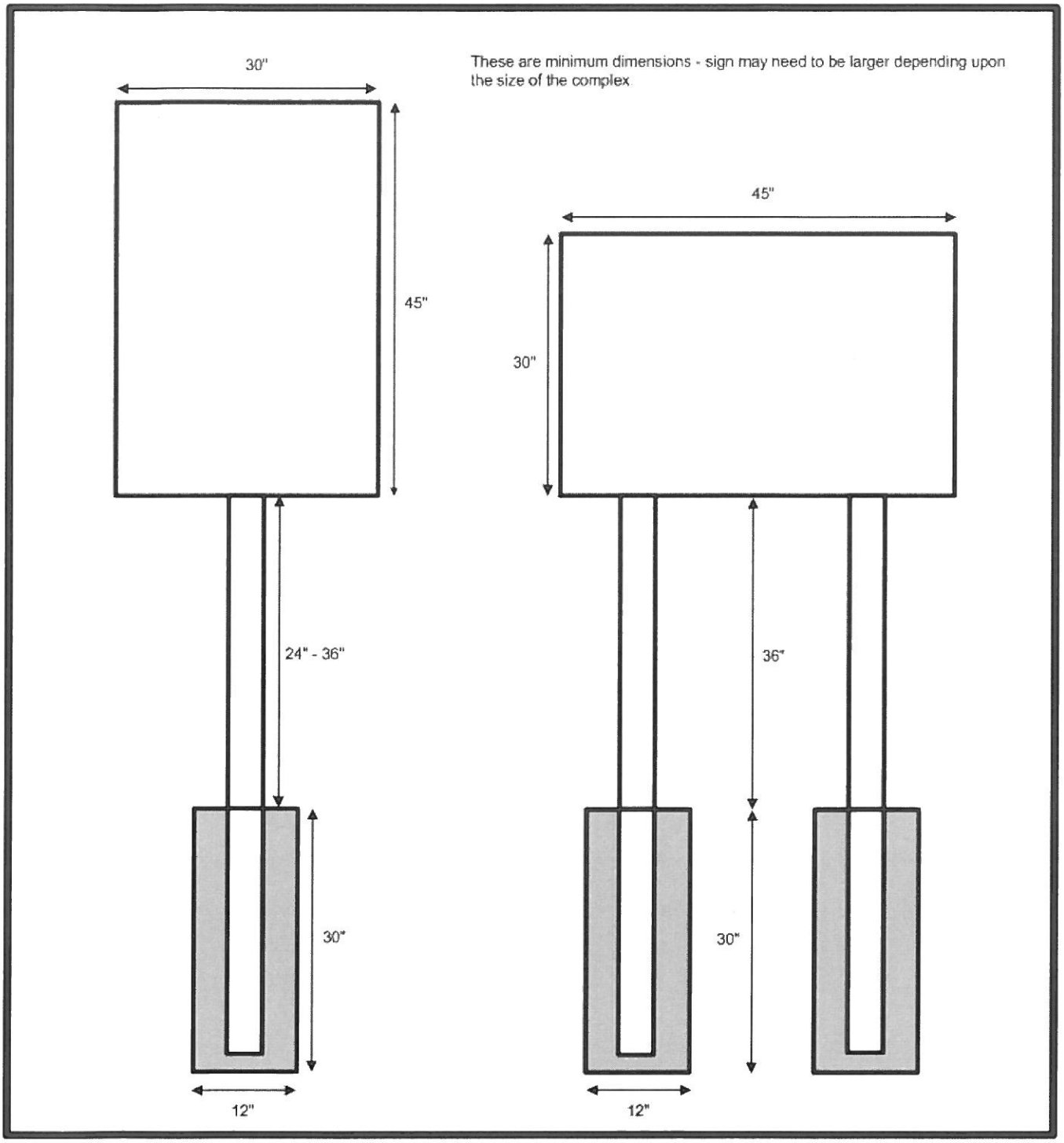
Figure 1